"THE MATERIAL HEREIN IS FOR INFORMATION PURPOSES ONLY AND IS SUBJECT TO CHANGE WITHOUT NOTICE. DIGITAL EQUIPMENT CORPORATION ASSUMES NO RESPONSIBILITY FOR ANY ERRORS WHICH MAY APPEAR HEREIN."

FIELD MAINTENANCE PRINT SET

"THIS DRAWING AND SPECIFICATIONS, HEREIN, ARE THE PROPERTY OF DIGITAL EQUIPMENT CORPORATION AND SHALL NOT BE REPRODUCED OR COPIED OR USED IN WHOLE OR IN PART AS THE BASIS FOR THE MANUFACTURE OR SALE OF ITEMS WITHOUT WRITTEN PERMISSION. COPYRIGHT © 1982 DIGITAL EQUIPMENT CORPORATION."

TABLE OF CONTENTS

B-TC-11730-Z-1	FIELD MAINTENANCE PRINT SET MP01270
B-DD-11730-Z	11730-Z UNIT ASSY - DWG. DIRECTORY
E-UA-11730-Z-0	11730-Z UNIT ASSY
K-PL-11730-Z-DBP	11730-Z UNIT ASSY - PARTS LIST
B-PL-11730-Z-2	11730-Z SHIPPING LIST
B-PL-11730-Z-3	11730-Z HARDWARE KIT LIST
D-BD-11730-Z-5	11730-Z SYSTEM BLOCK DIAGRAM
MP01266	BA11-Z BOX ASSY FIELD MAINT. PRINT SET (COMPLETE);INCLUDES MP02157 H7202 LEM POWER SUPPLY FIELD MAINT. SET.
E-AD-7018079-0-0	CONSOLE ASSY
K-PL-7018079-0-DBP	CONSOLE ASSY - PARTS LIST
B-DD-5414438-0	CONSOLE BOARD - DWG. DIRECTORY
D-UA-5414438-0-0	CONSOLE MODULE ASSY
K-PL-5414438-0-DBP	CONSOLE MODULE ASSY - PARTS LIST
D-CS-5414438-0-1	CONSOLE MODULE ASSY - CIRCUIT SCHEM.
D-EC-5014437-0-0	CONSOLE BOARD - ETCH CUT DWG.
E-AD-7018114-0-0	TU58 DUAL DRIVE ASSY
K-PL-7018114-0-DBP	TU58 DUAL DRIVE ASSY - PARTS LIST
D-AD-7015510-0-0	CARTRIDGE DRIVE
K-PL-7015510-0-DBP	CARTRIDGE DRIVE - PARTS LIST
B-DD-5413489-0	SERIAL TU58 - DWG DIRECTORY
E-UA-5413489-0-0	SERIAL TU58
K-PL-5413489-0-DBP	SERIAL TU58 - PARTS LIST
D-CS-5413489-0-1	SERIAL TU58 - CIRCUIT SCHEM.
E-EC-5013488-0-0	SERIAL TU58 - ETCH CUT DWG.
C-IA-7016305-0-0	TU BULKHEAD SIGNAL CABLE
D-IA-7018166-0-0	TU BULKHEAD POWER CABLE
K-PL-7018166-0-DBP	TU BULKHEAD POWER CABLE - PARTS LIST
D-IA-7011411-0-0	CABLE ASSY
D-IA-7018109-0-0	CABLE , TU58 POWER
K-PL-7018109-0-DBP	CABLE , TU58 POWER - PARTS LIST
C-IA-7018720-0-0	CATCH PAN ASSY
K-PL-7018720-0-DBP	CATCH PAN ASSY - PARTS LIST
D-AD-7018778-0-0	CPU - I/O PANEL ASSY
K-PL-7018778-0-DBP	CPU - I/O PANEL ASSY - PARTS LIST
E-AD-7018779-0-0	CPU CABLE RETRACTOR ASSY
K-PL-7018779-0-DBP	CPU CABLE RETRACTOR ASSY - PARTS LIST
A-PA-3700662-0-0	PKG INSTR , CPU , 11730-Z

UNIT VARIATIONS COVERED BY THIS PRINT SET
11730-ZA

11730-Z

Field Maintenance Print Set

Digital Equipment Corporation

PRINT SET ORDER
NO. MP01270

REV. A | SIZE B | CODE TC | NUMBER 11730-Z-1

REVISIONS	REV	CHG. NO.	DATE

USED ON OPTION/MODEL

SHEET 1 OF 2

DRN.	A. ROCHA	DATE 22mar82
CHK'D	R.MORIN	DATE 13APR82
PROJ. ENG.	R.MORIN	DATE 13APR82
FIELD SERV.	H. Hunter	DATE 21 APR 82

digital

TITLE:
FIELD MAINT. PRINT SET
11730-Z

SIZE	CODE	NUMBER	REV.
B	TC	11730-Z-1	A

DIST.

DRB 124

TW

"THE MATERIAL HEREIN IS FOR INFORMATION PURPOSES ONLY AND IS SUBJECT TO CHANGE WITHOUT NOTICE. DIGITAL EQUIPMENT CORPORATION ASSUMES NO RESPONSIBILITY FOR ANY ERRORS WHICH MAY APPEAR HEREIN."

FIELD MAINTENANCE PRINT SET

"THIS DRAWING AND SPECIFICATIONS, HEREIN, ARE THE PROPERTY OF DIGITAL EQUIPMENT CORPORATION AND SHALL NOT BE REPRODUCED OR COPIED OR USED IN WHOLE OR IN PART AS THE BASIS FOR THE MANUFACTURE OR SALE OF ITEMS WITHOUT WRITTEN PERMISSION. COPYRIGHT © 1982 DIGITAL EQUIPMENT CORPORATION."

TABLE OF CONTENTS CONTINUED

B-DD-KA730-A	11730 MODULE SET - DWG. DIRECTORY
K-PL-KA730-A-DBP	11730 MODULE SET - PARTS LIST
B-DD-M8390-0	M8390 DATA PATH MODULE - DWG DIRECTORY
D-UA-M8390-0-0	M8390 DATA PATH MODULE ASSY
K-PL-M8390-0-DBP	M8390 DATA PATH MODULE ASSY - PARTS LIST
D-BD-M8390-0-0	DATA PATH BLOCK DIAGRAM
D-BD-M8390-0-1	11730 CONTROL STORE FORMATS
D-CS-M8390-0-DAPX(COMPLETE)	DATA PATH - CIRCUIT SCHEM.
D-GL-M8390-0-0	DATA PATH - ROM AND PALS LISTING
D-TD-M8390-0-0	11730 CPU MICROCYCLE TIMING
D-EC-5013860-0-0	M8390 DATA PATH MODULE - ETCH CUT DWG
B-DD-M8391-0	M8391 MEMORY CONTR. MODULE - DRAWING DIRECTORY
D-UA-M8391-0-0	M8391 MEMORY CONTR. MODULE ASSY
K-PL-M8391-0-DBP	M8391 MEMORY CONTR. MODULE ASSY - PARTS LIST
D-BD-M8391-0-1	MEMORY CONTROLLER BLOCK DIAGRAM
D-CS-M8391-0-MCTX(COMPLETE)	MEMORY CONTROLLER - CIRCUIT SCHEMATIC
D-FC-M8391-0-XX(COMPLETE)	MEMORY CONTROLLER MICROCODE FLOWS
D-GL-M8391-0-0	MEMORY CONTROLLER - ROM AND PALS LISTING
D-TD-M8391-0-0	MEMORY CONTROLLER - TIMING DIAGRAM
D-EC-5013893-0-0	M8391 MEMORY CONTR. MODULE - ETCH CUT DWG
B-DD-M8394-0	M8394 WRITEABLE CONTROL STORE MOD. - DRAWING DIRECTORY
D-UA-M8394-0-0	M8394 WRITEABLE CONTROL STORE MOD. ASSY
K-PL-M8394-0-DBP	M8394 WRITEABLE CONTROL STORE MOD. ASSY - PARTS LIST
D-BD-M8394-0-0	WRITEABLE CONTROL STORE - BLOCK DIAGRAM
D-CS-M8394-0-WCSX(COMPLETE)	WRITEABLE CONTROL STORE - CIRCUIT SCHEMATIC
D-GL-M8394-0-0	WRITEABLE CONTROL STORE - ROM AND PALS LISTING
D-TD-M8394-0-0	W.C.S. DYNAMIC RAM TIMING DIAGNOSTICS
D-EC-5014439-0-0	W.C.S. ETCH CUT DRAWING
B-DD-G7273-0	BUS GRANT & NON-PROC GRANT CARD - DRAWING DIRECTORY
D-UA-G7273-0-0	BUS GRANT & NON-PROC GRANT CARD ASSY
K-PL-G7273-0-DBP	BUS GRANT & NON-PROC GRANT CARD - PARTS LIST
D-CS-M9302-YA-1	M9302 UNIBUS TERMINATOR - CIRCUIT SCHEM.
MP01366	1 MB MEMORY ARRAY FIELD MAINT PRINT SET (COMPLETE)

UNIT VARIATIONS COVERED BY THIS PRINT SET
11730-ZA

11730-Z

Field Maintenance Print Set

Digital Equipment Corporation

PRINT SET ORDER
NO. MP01270

REV. A | SIZE B | CODE TC | NUMBER 11730-Z-1

REVISIONS	REV	CHG. NO.	DATE

USED ON OPTION/MODEL

SHEET 2 OF 2

DRN. A. ROCHA	DATE 22MAR82	
CHK'D R. MORIN	DATE 13APR82	
PROJ. ENG. R. MORIN	DATE 13APR82	
FIELD SERV. V. Hunter	DATE 21 APR 82	

digital

TITLE: FIELD MAINT. PRINT SET 11730-Z

SIZE	CODE	NUMBER	REV.
B	TC	11730-Z-1	A

DIST.

DRB 124

TW

"THE MATERIAL HEREIN IS FOR INFORMATION PURPOSES ONLY AND IS SUBJECT TO CHANGE WITHOUT NOTICE. DIGITAL EQUIPMENT CORPORATION ASSUMES NO RESPONSIBILITY FOR ANY ERRORS WHICH MAY APPEAR HEREIN."

DRAWING DIRECTORY

"THIS DRAWING AND SPECIFICATIONS, HEREIN, ARE THE PROPERTY OF DIGITAL EQUIPMENT CORPORATION AND SHALL NOT BE REPRODUCED OR COPIED OR USED IN WHOLE OR IN PART AS THE BASIS FOR THE MANUFACTURE OR SALE OF ITEMS WITHOUT WRITTEN PERMISSION. COPYRIGHT © 1982 DIGITAL EQUIPMENT CORPORATION.

UNIT VARIATIONS

VAR	TITLE
11730-ZA	BA11-ZA, KA730-A, MS730-CA, 120V/240V

REVISIONS

REV.	CHANGE NO.	CHK

USED ON OPTION/MODEL: 11730-Z

SHEET 1 OF 6

		DATE
DRN.	R P Morin	2 FEB 82
CHK'D.	R P Morin	2 FEB 82
PROJ. ENG.	R P Morin	2 FEB 82
PROD.	S A Castylin	21 APR 82

TITLE: 11730-Z UNIT ASSY

digital

SIZE	CODE	NUMBER	REV
B	DD	11730-Z	A

DIST.

DRB 106A

TW

"THIS DRAWING AND SPECIFICATIONS, HEREIN, ARE THE PROPERTY OF DIGITAL EQUIPMENT CORPORATION AND SHALL NOT BE REPRODUCED OR COPIED OR USED IN WHOLE OR IN PART AS THE BASIS FOR THE MANUFACTURE OR SALE OF ITEMS WITHOUT WRITTEN PERMISSION.
COPYRIGHT © 1982 DIGITAL EQUIPMENT CORPORATION"

1 — 11730-Z UNIT ASSY
B-DD-11730-Z
E-UA-11730-Z-0
K-PL-11730-Z-DBP

2 — BA11-Z BOX ASSY
B-DD-BA11-Z
E-UA-BA11-Z-0
K-PL-BA11-Z-DBP

REF — H7202-B P.S
B-DD-H7202-0

REF — MODULE FAN ASSY
E-AD-7018081-0-0

REF — 11730-Z CARD CAGE ASSY
E-AD-7018078-0-0

REF — 11730-Z BACKPLANE ASSY
B-DD-7018080-0

3 — CONSOLE ASSY
E-AD-7018079-0-0
K-PL-7018079-0-DBP

4 — CONSOLE MODULE ASSY
B-DD-5414438-0
D-UA-5414438-0-0
K-PL-5414438-0-DBP

5 — TU58 DUAL DRIVE BEZEL ASSY
C-IA-7018168-0-0

6 — TU58 DUAL DRIVE ASSY
E-AD-7018114-0-0
K-PL-7018114-0-DBP

7 — CARTRIDGE DRIVE ASSY
D-AD-7015510-0-0
K-PL-7015510-0-DBP

8 — SERIAL TU-58 MODULE
B-DD-5413489-0
E-UA-5413489-0-0
K-PL-5413489-0-DBP

9 — TU ENCLOSURE, RIVETED ASSY
C-IA-7018164-0-0

10 — TU BULKHEAD SIGNAL CABLE
C-IA-7016305-0-0

11 — TU BULKHEAD POWER CABLE
D-IA-7018166-0-0
K-PL-7018166-0-DBP

12 — JUMPER, DRIVE TO DRIVE
B-IA-7018521-0-0

13 — JUMPER, DRIVE TO GROUND
B-IA-7018522-0-0

14 — JUMPER, GROUND TO GROUND
B-IA-7018523-0-0

TITLE		SIZE	CODE	NUMBER	REV
11730-Z UNIT ASSY	SHEET 2 OF 6	B	DD	11730-Z	A

TW

"THIS DRAWING AND SPECIFICATIONS, HEREIN, ARE THE PROPERTY OF DIGITAL EQUIPMENT CORPORATION AND SHALL NOT BE REPRODUCED OR COPIED OR USED IN WHOLE OR IN PART AS THE BASIS FOR THE MANUFACTURE OR SALE OF ITEMS WITHOUT WRITTEN PERMISSION.
COPYRIGHT © 1982 DIGITAL EQUIPMENT CORPORATION"

15
11730 MODULE SET
B-DD-KA730-0
K-PL-KA730-A-DBP

16
DATA PATH MODULE
B-DD-M8390-0
D-UA-M8390-0-0
K-PL-M8390-0-DBP

17
MEMORY CONT. MODULE
B-DD-M8391-0
D-UA-M8391-0-0
K-PL-M8391-0-DBP

18
WRITABLE CONTROL STORE MODULE
B-DD-M8394-0
D-UA-M8394-0-0
K-PL-M8394-0-DBP

19
BUS GRANT & NON-PROC GRANT CARD
B-DD-G7273-0
D-UA-G7273-0-0
K-PL-G7273-0-DBP

20
UNIBUS TERMINATOR
B-DD-M9302-0
D-UA-M9302-0-0
K-PL-M9302-0-DBP

21
IMB MEMORY ARRAY MODULE
B-DD-MS730-C
B-PL-MS730-C-0

34
MOS MEMORY ARRAY
B-DD-M8750-0
D-UA-M8750-0-0
K-PL-M8750-CA-DBP

22
CABLE ASSY
(10 COND. RIBBON)
D-IA-7011411-0-0

23
TU58 POWER CABLE
D-IA-7018109-0-0
K-PL-7018109-0-DBP

24
CABLE ASSY
(25/26 COND. RIBBON)
C-IA-7018074-0-0

25
CPU CABLE RETRACTOR ASSY
E-AD-7018779-0-0
K-PL-7018779-0-DBP

26
RETRACTOR TRAY, RIVETED ASSY
D-IA-7018549-0-0
K-PL-7018549-0-DBP

27
CLAMP ASSY
C-IA-7018772-0-0
K-PL-7018772-0-DBP

28
CPU-I/O PANEL ASSY
D-AD-7018778-0-0
K-PL-7018778-0-DBP

29
UNIBUS FILLER BRKT ASSY
B-IA-7018781-0-0
K-PL-7018781-0-DBP

30
CATCH PAN ASSY
C-IA-7018720-0-0
K-PL-7018720-0-DBP

31
PRESSURE SHEET ASSY
C-IA-7018718-0-0
K-PL-7018718-0-DBP

32
CLAMP ASSY
C-IA-7018772-0-0
K-PL-7018772-0-DBP

33
PKG, CPU, 11730-ZA
A-PS-3700662-0-0

TITLE		SIZE	CODE	NUMBER	REV
11730-Z UNIT ASSY	SHEET 3 OF 6	B	DD	11730-Z	A

TW

FIND NO.	DRAWING NO.	DESCRIPTION	TYPE
1.	MP01270	FIELD MAINTENANCE PRINT SET (MP)	-
	B-TC-11730-Z-1	FIELD MAINTENANCE PRINT SET (TC)	-
	B-DD-11730-Z	11730-Z UNIT ASSY - DRAWING DIRECTORY	-
	E-UA-11730-Z-0	11730-Z UNIT ASSY	E/M
	K-PL-11730-Z-DBP	11730-Z UNIT ASSY - PARTS LIST -Z28	-
	B-PL-11730-Z-2	11730-Z SHIPPING LIST	-
	B-PL-11730-Z-3	11730-Z HARDWARE KIT LIST	M
	D-BD-11730-Z-5	11730 SYSTEM BLOCK DIAGRAM	-
	C-PS-1209856-0-0	MODULE HOLDER	M
	A-PS-1217665-0-0	FILTER FOAM	M
	A-PS-1218166-0-0	SLIDE (PAIR) W/HDW	M
	A-PS-1219020-0-0	CARRIER,CABLE	M
	A-PS-1215700-0-0	CABLE,FERRULED	M
	A-PS-3615809-0-0	MEDIA CARTRIDGE,TU58-K	M
	D-MD-7425374-0-0	BRACKET,SLIDE MOUNTING	M
	B-IA-7426335-0-0	PLATE,STUD	M
	C-MD-7413659-0-0	BRACKET,SHIPPING	M
	C-MD-7425927-0-0	GUIDE AND CLAMP	M
	C-MD-7425928-0-0	BRACKET,CARRIER/BOX	M
	C-MD-7425929-0-0	BRACKET,CAB/CARRIER	M
	D-MD-7426623-0-0	CLAMP,R80 CABLE	M
	D-IA-7426625-0-0	CLAMP,DMF CABLE	M
	B-IA-7426723-0-0	BAR CLAMP ASSY	M
			-
2.	B-DD-BA11-Z	BA11-Z BOX ASSY -DRAWING DIRECTORY	-
	E-UA-BA11-Z-0	BA11-Z BOX ASSY	E/M
	K-PL-BA11-Z-DBP	BA11-Z BOX ASSY - PARTS LIST - Z1862	-
3.	E-AD-7018079-0-0	CONSOLE ASSY	E/M
	K-PL-7018079-0-DBP	CONSOLE ASSY - PARTS LIST - Z1827	-
	A-PS-1216178-0-0	LOCK,ASSY PLASTIC (6 POS)	M
	A-PS-1217094-0-0	BEZEL,10.5 IN.	M
	A-PS-1217665-0-0	FILTER,FOAM INSERT	M
	E-IA-7424269-0-0	CONSOLE,INSERT	M
	E-IA-7424832-0-0	MOUNTING PLATE,10.5 IN.	M
	D-MD-7426334-0-0	SHIELD	M
4.	B-DD-5414438-0	CONSOLE MODULE ASSY - DRAWING DIRECTORY	-
	D-UA-5414438-0-0	CONSOLE MODULE ASSY	E/M
	K-PL-5414438-0-DBP	CONSOLE MODULE ASSY - PARTS LIST	-
	D-CS-5414438-0-1	CONSOLE MODULE ASSY - CIRCUIT SCHEMATIC	E

FIND NO.	DRAWING NO.	DESCRIPTION	TYPE
5.	C-IA-7018168-0-0	TU58 DUAL DRIVE BEZEL ASSY	M
	D-MD-7425270-0-0	BEZEL,FRONT,TU	M
	B-MD-7425341-0-0	TU,LED BUTTON	M
6.	E-AD-7018114-0-0	TU58 DUAL DRIVE ASSY	E/M
	K-PL-7018114-0-DBP	TU58 DUAL DRIVE ASSY - PARTS LIST - Z1352	-
	D-IA-7423933-0-0	PLATFORM,TU58	M
	B-MD-7424846-0-0	TU CENTER BRACE	M
	D-MD-7424848-0-0	TU,BOTTOM PLATE	M
	A-PS-1118799-0-0	LED CABLE ASSY	E/M
7.	D-AD-7015510-0-0	CARTRIDGE DRIVE ASSY	E/M
	K-PL-7015510-0-DBP	CARTRIDGE DRIVE ASSY - PARTS LIST - Z1620	-
8.	B-DD-5413489-0	SERIAL TU58 MODULE ASSY - DRAWING DIRECTORY	-
	E-UA-5413489-0-0	SERIAL TU58 MODULE ASSY	E/M
	K-PL-5413489-0-DBP	SERIAL TU58 MODULE ASSY - PARTS LIST - Z0582	-
	D-CS-5413489-0-1	SERIAL TU58 MODULE ASSY - CIRCUIT SCHEMATIC	E
9.	C-IA-7018164-0-0	TU ENCLOSURE,RIVETED ASSY	M
	E-IA-7424845-0-0	TU ENCLOSURE	M
	C-MD-7424847-0-0	TU BACKPLATE	M
10.	C-IA-7016305-0-0	TU BULKHEAD SIGNAL CABLE	E/M
11.	D-IA-7018166-0-0	TU BULKHEAD POWER CABLE	E/M
	K-PL-7018166-0-DBP	TU BULKHEAD POWER CABLE - PARTS LIST - Z1854	-
12.	B-IA-7018521-0-0	JUMPER,DRIVE TO DRIVE	M
13.	B-IA-7018522-0-0	JUMPER,DRIVE TO GROUND	M
14.	B-IA-7018523-0-0	JUMPER GROUND TO GROUND	M
15.	B-DD-KA730-A	11730 MODULE SET - DRAWING DIRECTORY	-
	K-PL-KA730-A-DBP	11730 MODULE SET - PARTS LIST	-

TYPE: E ELECTRICAL
M MECHANICAL
E/M ELECTRO/MECHANICAL

digital

TITLE	SHEET	SIZE	CODE	NUMBER	REV
11730-Z UNIT ASSY	4 OF 6	B	DD	11730-Z	A

DRB 108A

TW

FIND NO.	DRAWING NO.	DESCRIPTION	TYPE
16	B-DD-M8390-0	M8390 DATA PATH MODULE - DRAWING DIRECTORY	-
	D-UA-M8390-0-0	M8390 DAP MODULE ASSY	E/M
	K-PL-M8390-0-DBP	M8390 DAP MODULE ASSY (PARTS LIST)	-
	D-CS-M8390-0-1	M8390 DAP MODULE - CIRCUIT SCHEMATIC	E
17	B-DD-M8391-0	M8391 MEMORY CONTROLLER MODULE- DWG DIRECTORY	-
	D-UA-M8391-0-0	M8391 MCT MODULE ASSY	E/M
	K-PL-M8391-0-DBP	M8391 MCT MODULE ASSY (PARTS LIST)	-
	D-CS-M8391-0-1	M8391 MCT MODULE- CIRCUIT SCHEMATIC	E
18	B-DD-M8394-0	M8394 WRITABLE CONTROL STORE MODULE-DWG DIR.	-
	D-UA-M8394-0-0	M8394 WCS MODULE ASSY	E/M
	K-PL-M8394-0-DBP	M8394 WCS MODULE ASSY (PARTS LIST)	-
	D-CS-M8394-0-1	M8394 WCS MODULE - CIRCUIT SCHEMATIC	E
19	B-DD-G7273-0	BUS GRANT AND NON-PROCESSOR GRANT CARD - DWG DIR.	-
	D-UA-G7273-0-0	GRANT CARD ASSY	E/M
	K-PL-G7273-0-DBP	GRANT CARD ASSY (PARTS LIST)	-
20	B-DD-M9302-0	UNIBUS TERMINATOR - DRAWING DIRECTORY	-
	D-UA-M9302-0-0	UNIBUS TERMINATOR ASSY	E/M
	K-PL-M9302-0-DBP	UNIBUS TERMINATOR ASSY (PARTS LIST)	-
	D-CS-M9302-0-1	UNIBUS TERMINATOR ASSY - CIRCUIT SCHEMATIC	E
21	B-DD-MS730-C	MS730 MEMORY ARRAY MODULE - DRAWING DIRECTORY	-
	K-PL-MS730-C-DBP	MS730 MEMORY ARRAY MODULE ASSY - PARTS LIST	-
22	D-IA-7011411-0-0	CABLE ASSY - 10 COND. RIBBON	E/M
23	D-IA-7018109-0-0	CABLE, TU58 POWER	E/M
	K-PL-7018109-0-DBP	CABLE, TU58 POWER (PARTS LIST) - Z1853	-
24	C-IA-7018074-0-0	CABLE ASSY - 25/26 COND RIBBON	E/M

FIND NO.	DRAWING NO.	DESCRIPTION	TYPE
25	E-AD-7018779-0-0	CPU CABLE RETRACTOR ASSY	M
	K-PL-7018779-0-DBP	CPU CABLE RETRACTOR ASSY (PARTS LIST) -Z3612	-
	E-IA-7425733-0-0	TRAY, R.H. HALF	M
	E-IA-7426619-0-0	BRACKET, I/O PANEL (RT AND LT)	M
	E-IA-7426618-0-0	PANEL, I/O PORT	M
	C-IA-7426620-0-0	BRACKET, MAGNET	M
	C-MD-7426621-0-0	COVER PLATE, R80 HOLE	M
	B-IA-7426652-0-0	PLATE, NUT	M
	D-MD-7426407-01-DBU	PANEL, DOUBLE BLANK	M
	A-PS-1212908-0-0	DOOR CATCH, MAGNETIC	M
26	D-IA-7018549-0-0	RETRACTOR TRAY - RIVETED ASSY	M
	K-PL-7018549-0-DBP	RETRACTOR TRAY - RIVETED ASSY (PARTS LIST) - Z2446	-
	D-MD-7425729-0-0	GUIDE, CABLE	M
	E-IA-7425732-0-0	TRAY, L.H. HALF	M
27	C-IA-7018772-0-0	CLAMP ASSY	M
	K-PL-7018772-0-DBP	CLAMP ASSY (PARTS LIST) -Z3325	-
	C-MD-7425711-0-0	CLAMP, CABLE	M
	B-MD-7426358-0-0	FOAM, ADH-BACKED	M
28	D-AD-7018778-0-0	CPU - I/O PANEL ASSY	M
	K-PL-7018778-0-DBP	CPU - I/O PANEL ASSY (PARTS LIST) -Z3616	-
	D-IA-7426405-04-DBU	PLATE, SEXTAL, CPU - I/O	M
	C-IA-7426654-0-0	BRACKET, CABLE GRD	M
	A-PS-1219534-0-0	SCREW, CAPTIVE	M
	A-PS-1217431-0-0	CONN, D SUB, 25 PIN FILTERED	E/M
	A-PS-1211591-0-0	CONN, ZIF, 40 CONDUCTOR	E/M
29	B-IA-7018781-0-0	BRACKET ASSY, UNIBUS FILLER	M
	K-PL-7018781-0-DBP	BRACKET ASSY, UNIBUS FILLER (PARTS LIST) Z3618	-
	D-MD-7426624-0-0	PLATE, UNIBUS FILLER	M
	B-MD-7426653-0-0	FOAM PAD, CABLE CLAMP	M
30	C-IA-7018720-0-0	CATCH PAN ASSY	M
	K-PL-7018720-0-DBP	CATCH PAN ASSY (PARTS LIST) -Z2835	-
	E-IA-7425728-0-0	CATCH PAN	M

TYPE: E ELECTRICAL
M MECHANICAL
E/M ELECTRO/MECHANICAL

digital

TITLE	SHEET	SIZE	CODE	NUMBER	REV
11730-Z UNIT ASSY	5 OF 6	B	DD	11730-Z	A

DRB 108A

TW

FIND NO.	DRAWING NO.	DESCRIPTION	TYPE
31	C-IA-7018718-0-0	PRESSURE SHEET ASSY	M
	K-PL-7018718-0-DBP	PRESSURE SHEET ASSY (PARTS LIST) - Z2618	-
	C-MD-7425726-0-0	SHEET, PRESSURE	M
	C-MD-7425730-0-0	CLAMP, SHEET	M
32	C-IA-7018772-0-0	CLAMP ASSY	M
	K-PL-7018772-0-DBP	CLAMP ASSY (PARTS LIST) -Z3325	-
	C-MD-7425711-0-0	CLAMP, CABLE	M
	B-MD-7426358-0-0	FOAM, ADH-BACKED	M
33	A-PS-3700662-0-0	PKG, CPU, 11730-ZA	M
34	B-DD-M8750-0	1 MB MOS MEMORY ARRAY - DRAWING DIRECTORY	-
	D-UA-M8750-0-0	1 MB MOS MEMORY ARRAY	E/M
	K-PL-M8750-CA-DBP	1 MB MOS MEMORY ARRAY - PARTS LIST	-
	D-CS-M8750-0-1	1 MB MOS MEMORY ARRAY - CIRCUIT SCHEM.	E

FIND NO.	DRAWING NO.	DESCRIPTION	TYPE

TYPE: E ELECTRICAL
M MECHANICAL
E/M ELECTRO/MECHANICAL

digital

TITLE	SHEET	OF	SIZE	CODE	NUMBER	REV
11730-Z UNIT ASSY	6	6	B	DD	11730-Z	A

DRB 108A

TW

NOTES:

1. FROM HEREIN, ALL NOTES SHOWN ON ANY GIVEN SHEET, PERTAIN TO THE SHEET THERE SHOWN ON ONLY.
2. TWO POWER CORDS, ONE FOR 120V AND ONE FOR 240V, ARE BEING SUPPLIED WITH EACH SYSTEM. POWER SUPPLY SELECTOR SWITCH MUST BE POSITIONED CORRECTLY FOR PROPER OPERATION. UNUSED CORD CAN BE DISCARDED.

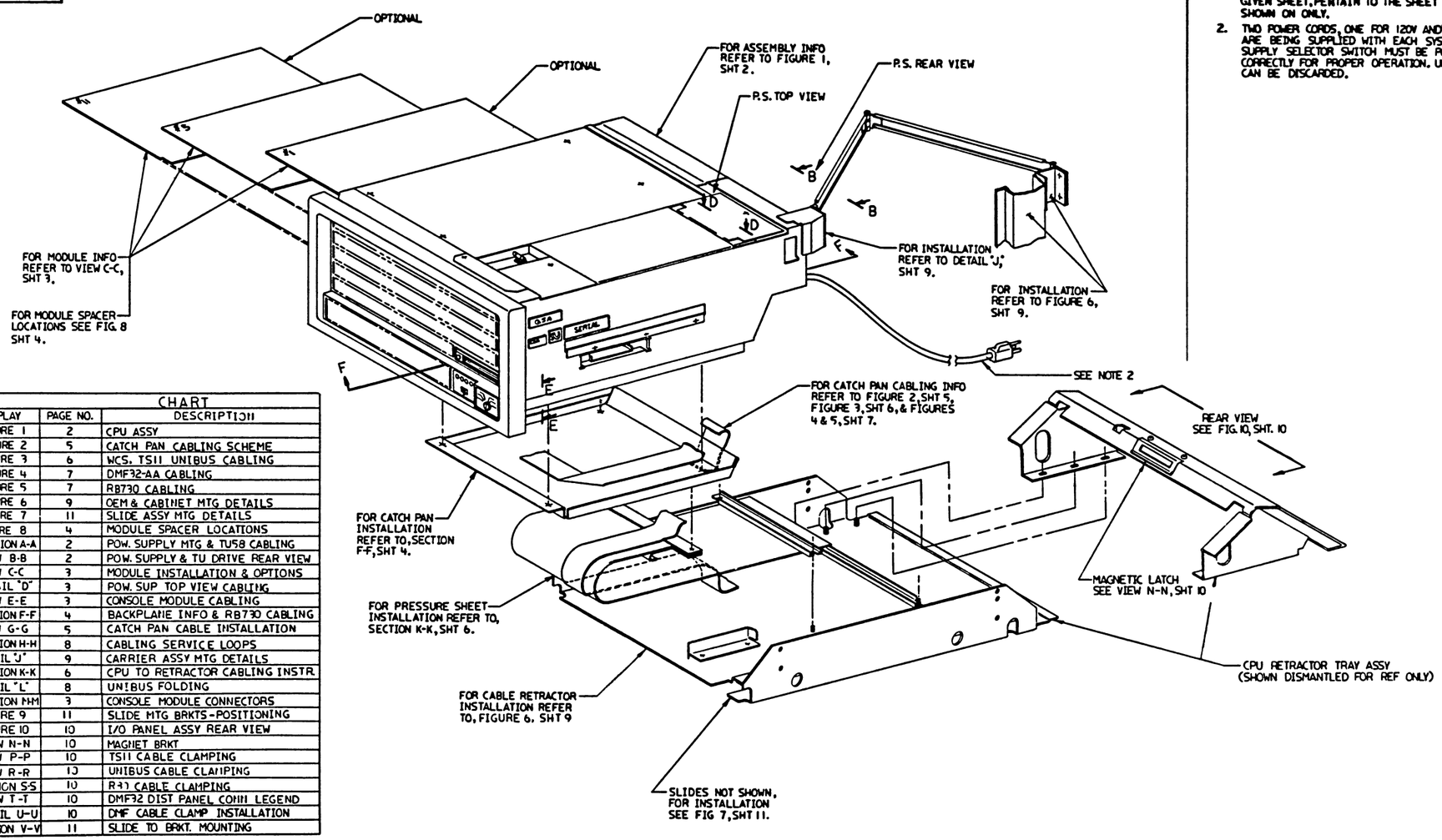

CHART		
DISPLAY	PAGE NO.	DESCRIPTION
FIGURE 1	2	CPU ASSY
FIGURE 2	5	CATCH PAN CABLING SCHEME
FIGURE 3	6	WCS. TS11 UNIBUS CABLING
FIGURE 4	7	DMF32-AA CABLING
FIGURE 5	7	RB730 CABLING
FIGURE 6	9	OEM & CABINET MTG DETAILS
FIGURE 7	11	SLIDE ASSY MTG DETAILS
FIGURE 8	4	MODULE SPACER LOCATIONS
SECTION A-A	2	POW. SUPPLY MTG & TU58 CABLING
VIEW B-B	2	POW. SUPPLY & TU DRIVE REAR VIEW
VIEW C-C	3	MODULE INSTALLATION & OPTIONS
DETAIL "D"	3	POW. SUP TOP VIEW CABLING
VIEW E-E	3	CONSOLE MODULE CABLING
SECTION F-F	4	BACKPLANE INFO & RB730 CABLING
VIEW G-G	5	CATCH PAN CABLE INSTALLATION
SECTION H-H	8	CABLING SERVICE LOOPS
DETAIL "J"	9	CARRIER ASSY MTG DETAILS
SECTION K-K	6	CPU TO RETRACTOR CABLING INSTR.
DETAIL "L"	8	UNIBUS FOLDING
SECTION M-M	3	CONSOLE MODULE CONNECTORS
FIGURE 9	11	SLIDE MTG BRKTS-POSITIONING
FIGURE 10	10	I/O PANEL ASSY REAR VIEW
VIEW N-N	10	MAGNET BRKT
VIEW P-P	10	TS11 CABLE CLAMPING
VIEW R-R	10	UNIBUS CABLE CLAMPING
SECTION S-S	10	RB3 CABLE CLAMPING
VIEW T-T	10	DMF32 DIST PANEL CONN LEGEND
DETAIL U-U	10	DMF CABLE CLAMP INSTALLATION
SECTION V-V	11	SLIDE TO BRKT. MOUNTING

VARIATION CHART	
NUMBER	VARIATION
11730-ZA	BA11-ZA, KA730-A, MS730-CA, 120V/240V

CAUTION: FOR PARTS LIST REFER TO K-PL-11730-Z-DBP. (Z2842) FOR SYSTEM BLOCK DIAGRAM REFER TO D-BD-11730-Z-5.

UNLESS OTHERWISE SPECIFIED DIMENSIONS ARE IN INCHES AND THE FOLLOWING TOLERANCES APPLY (PER DEC STD 114)

DO NOT SCALE DRAWING

REMOVE BURRS AND BREAK SHARP CORNERS

MATERIAL: SEE PARTS LIST

B-DD-11730-Z-0

TITLE: 11730-Z UNIT ASSY

DOCUMENT NUMBER: E UA 11730-Z-0 A

SCALE: SHEET 1 OF 1

THIS DRAWING AND SPECIFICATIONS, HEREIN, ARE THE PROPERTY OF DIGITAL EQUIPMENT CORPORATION AND THE INFORMATION CONTAINED HEREIN IS THE SOLE PROPRIETARY PROPERTY OF DEC EXCEPT AS SPECIFICALLY AUTHORIZED IN WRITING BY DEC. THE RECIPIENT AGREES BY ACCEPTANCE OF THIS DRAWING TO USE THE INFORMATION CONTAINED HEREIN IN A MANNER CONSISTENT WITH THE FOREGOING RESTRICTIONS.
1981 DIGITAL EQUIPMENT CORPORATION

REF
POWER TO BATTERY BACK-UP

SIGNAL (FLEXPRINT)

GND (FLEXPRINT)

POWER, TO TU58 DRIVE ASSY (ITEM #18)

REF
BBU HIGH VOLTAGE

REF
DEC POWER BUS

10-32 INSERT FOR CABLE GND LUGS

+5V DC (FLEXPRINT)

PRIMARY POWER 120V/240V
SEE NOTE 5 FOR PROPER CORD AND USAGE INSTRUCTIONS

TO PWR SUPPLY 12V DC FROM FAN

ITEM #4, TU58 (END VIEW) REF

ITEM 17 REF TU DRIVE SIGNAL CABLE (SEE SECTION A-A)

TU DRIVE POWER CABLE (SEE SECTION A-A)

VIEW B-B
SCALE : NONE
(CAUTION : RETRACTOR ARM, PART OF ITEM 1, REMOVED TO SHOW MORE DETAIL.)

CABLE DC TO FAN, PART OF ITEM 1 (SEE FIGURE #1 & VIEW B-B)

ORG, 12V

BLK, GND

CLAMPS P.S. (SEE NOTE 1)

TO POWER SUPPLY (SEE DETAIL D, SHEET 3)

POWER SUPPLY, PART OF ITEM #1

ITEM #16, TO CONSOLE ASSY (SEE FIGURE #1, & VIEW E-E, SHEET 3)

SEE NOTE 1 (4 TURNS MAX REQ, 2 PLCS TO OPEN OR CLOSE CLAMP JAW.)

11730-Z BACKPLANE, PART OF ITEM #1

STRIPE

MAINT CABLE ONLY-REF

REF

REAR PLATE OF TU58, ITEM #4

ITEM #18, TU58 POWER CABLE (SEE DETAIL D, SHT 3 & VIEW B-B)

ITEM #17, TU58 TO B/P CABLE (SEE VIEW B-B)

SECTION A-A
SCALE : NONE
(TO REMOVE OR REPLACE POWER SUPPLY, SEE NOTE 1)

120V/240V SELECTOR SWITCH

FAN ACCESS COVER, PART OF ITEM #1.

C SEE SHT 3

35 LOCATE APPROX AS SHOWN

REF, H7202-B POWER SUPPLY, (PART OF ITEM 1).

FAN DC POWER

ENERGY WARNING PLATE

F SEE SHEET 4

SEE DETAIL 'J' (SHT 9)

30 OR 31 REF ONLY SEE NOTE 5

PWR SUPPLY MTG SCREWS, PART OF ITEM #1, (QTY 4) SEE NOTE 1.

15

41 (QTY 2)

SEE DETAIL D SHEET 3

BAITZA BOX ASSY 1

GND LUG

3 CONSOLE ASSEMBLY

38

2

37

WARNING
VOLTAGE SELECTOR SWITCH MUST BE PROPERLY POSITIONED FOR FOR CORRECT POWER CORD USAGE. SEE NOTE 5)

STRIPE

TU58 DUAL DRIVE ASSY

4

40 (QTY 4) SEE NOTE 4

55

54

FIGURE #1
SCALE : NONE

25 (SEE NOTE 3)

39 (QTY 2)

SEE SHT 3

CONSOLE ASSY INSTALLATION SEE NOTE 4

KEYS (REF)

NOTES:

1. TO REMOVE POWER SUPPLY, DISCONNECT ALL ELECTRICAL CONNECTIONS AND FLEXPRINTS, REMOVE FAN ACCESS COVER, ENERGY WARNING PLATE, & FOUR (4) RIGHT SIDEWALL SCREWS, NOW LOOSEN TWO (2) POWER SUPPLY CLAMP HOLDOWN SCREWS (REFER TO SECTION A-A) AND SLIDE POWER SUPPLY TO THE REAR UNTIL ITS UNLATCHED FROM THE FRONT CLAMP THEN LIFT. TO REPLACE THE UNIT, FOLLOW INSTRUCTIONS IN REVERSE ORDER.
2. PRIMARY POWER CONN MUST BE DISCONNECTED TO REMOVE POWER SUPPLY COVER, SEE DETAIL D, SHEET 3.
3. FOAM FILTER ITEM 25, IS EASILY REMOVABLE FOR CLEANING OR REPLACING. MUST BE IN PLACE DURING OPERATION TO PREVENT DUST ACCUMULATION.
4. CONSOLE ASSY (ITEM 3) INSTALLATION REQUIRES THAT FRONT TU BEZEL MATES CORRECTLY TO MOUTH OF FRONT DRIVE UNIT WITHOUT UNNECESSARY PRESSURE OR INTERFERENCE. CONSOLE ASSY MUST BE GUIDED INTO POSITION AND THEN (4) SCREWS, ITEM 40, SECURED. FOAM FILTER IS THEN INSERTED INTO POSITION.
5. BOTH POWER CORDS, 120V AND 240V ARE SUPPLIED WITH ALL CPU'S. PLEASE FOLLOW WARNING INSTRUCTIONS AND ALSO DISCARD UNUSED POWER CORD.
6.

DESCRIPTION	DRAWING NO.	PART NO.	ITEM NO.
UNLESS OTHERWISE SPECIFIED DIMENSIONS ARE IN INCHES AND THE FOLLOWING TOLERANCES APPLY (PER DEC STD 119)			
QUANTITY & VARIATION			
THIRD ANGLE PROJECTION			
DO NOT SCALE DRAWING			
REMOVE BURRS AND BREAK SHARP CORNERS			
MATERIAL: SEE PARTS LIST			
FINISH			
NEXT HIGHER ASSY: B-DD-11730-Z			

TITLE: digital
11730-Z UNIT ASSY

DOCUMENT NUMBER: CAGE E UA | NUMBER 11730-Z-0 | REV A

SIZE E | SCALE | SHEET 1 OF 11

REVISION HISTORY: REV | ECO NUMBER | DATE

A 11730-Z-0

THIS DRAWING AND SPECIFICATION, HEREIN, ARE THE PROPERTY OF DIGITAL EQUIPMENT CORPORATION AND SHALL NOT BE REPRODUCED OR COPIED OR USED IN WHOLE OR IN PART AS THE BASIS FOR THE MANUFACTURE OR SALE OF ITEMS WITHOUT PERMISSION.
1981 DIGITAL EQUIPMENT CORPORATION

35 REF

MODULE UTIL.

TOP COVER, PART OF ITEM 1.

FAN HOUSING ASSY AND ENCLOSED SENSOR BOARD ASSY, PART OF ITEM 1.

1 REF — BA11-ZA BOX ASSY

REF ITEM 5 MRV30 M8358 (OPTION) INTERGRATED DISK CONTROLLER

REF ITEM 6 FPF30 M8389 (OPTION) FLOATING POINT ACC.

REF ITEM 8 DAP M8330 DATA PATH

REF ITEM 9 MCT M8311 MEMORY CONTROLLER

REF ITEM 10 WCS M8324 WRITABLE CONTROL STORE

MS730-CA M8750 MEMORY ARRAY

MS730-CA (OPTION)

G7273 GRANT

DWF32-AA M8396 (OPTION) MULTI FUNCTION MODULE

M9302 UNIBUS TERM.

SLOT 1 … SLOT 12

J1 J2 J3

ITEM 7, KA730-A MODULE SET, (QTY 1 STND) INCLUDES ITEMS 8,9,& 10.

ITEM 11, MEMORY ARRAY, (QTY 1 STND) SEE MODULE NOTES.

ITEM 13 REF, MULTI-FUNCTION MODULE.

ITEM 12, (QTY 5 STND) SLOTS 6,9,10,11 & 12 SEE MODULE NOTE D

SLOT 10 ALTERNATE OPTION TS11

14

MODULE SLOTS (REF)

A B C D E F

BOARD ACCESS COVER, PART OF ITEM 3 (NOTE: COVER MUST BE INSERTED/ INSTALLED AS SHOWN.

CAUTION: 1/4 TURN FASTENERS MUST BE POSITIVELY SECURED BEFORE CLOSING UNIT ASSY INTO CABINET, TO PREVENT DAMAGE TO THIS COVER AND CPU.

MODULE NOTES

A. SLOTS 8-10 ARE MEMORY OR HEX/QUAD SPC SLOTS. SLOTS 11 & 12 ARE SPC HEX/QUAD SLOTS RESPECTIVELY.
B. SLOTS 6 & 7, MEMORY ARRAY ONLY.
C. SLOT 5-J2 NOT USED IN THIS CONFIGURATION.
D. GRANT CARDS MUST BE USED IN ALL UNUSED C-D SLOTS, 8-12.
E. SLOT 12 (A&B CONN) IS FOR TERMINATOR OR UNIBUS CABLE.

REF BBU POWER — POWER TO TU58 DRIVE ASSY (ITEM 18) SEE SECTION A-A & VIEW B-B SHEET 2.

REF DEC POWER BUS — TO FAN ASSEMBLY (PART OF ITEM 1)

REF BBU HIGH VOLTAGE

SIGNAL FLEXPRINT (FROM BACKPLANE)

TO FRONT FAN (SEE FIGURE 1 & VIEW B-B, SHEET 2)

PRIMARY POWER CONN

STRIPE

ITEM 16 TO CONSOLE ASSY (SEE VIEW B-B & FIGURE 1, SHEET 2)

POWER SUPPLY COVER, (SEE NOTE 2, SHT 2)

COMM REG — MAIN 5V — MEM REG

INDICATOR LIGHTS

DETAIL D
SCALE: NONE
FROM SHEET 2

(PROTECTIVE COVER REMOVED FOR MORE DETAIL.)

VIEW C-C
SCALE: NONE
SEE SHEET 1

SECTION M-M
SCALE: NONE

CONSOLE PC BOARD (PART OF ITEM 3)

STRIPE

SIDE 2

CABLE, CONSOLE TO POWER SUPPLY — 16

CABLE, CONSOLE TO BACKPLANE — 15 REF

VIEW E-E
SCALE: NONE
SEE SHEET 2
REAR VIEW-MODULE BOARD ON CONSOLE ASSY

REVISION HISTORY

DATE	ECO NUMBER	REV

TITLE: 11730-Z UNIT ASSY

DOCUMENT NUMBER: SIZE E | CODE UA | 11730-Z-0 | REV A

SCALE — SHEET 3 OF 11

11730-Z-0 A

THIS DRAWING AND SPECIFICATIONS, HEREIN, ARE THE PROPERTY OF DIGITAL EQUIPMENT CORPORATION AND SHALL NOT BE REPRODUCED OR COPIED OR USED IN WHOLE OR IN PART AS THE BASIS FOR THE MANUFACTURE OR SALE OF ITEMS WITHOUT WRITTEN PERMISSION.
COPYRIGHT © 1981 DIGITAL EQUIPMENT CORPORATION

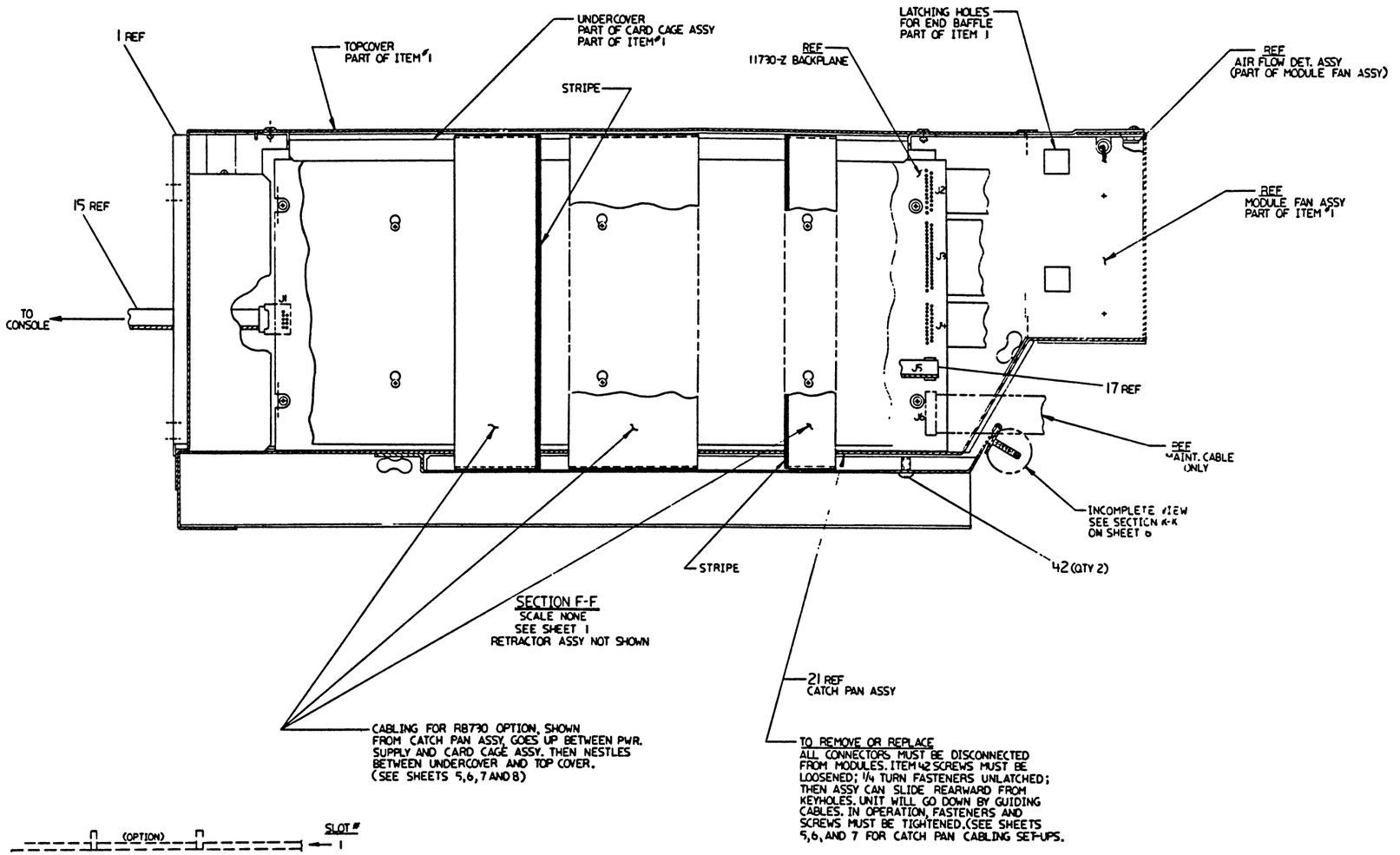

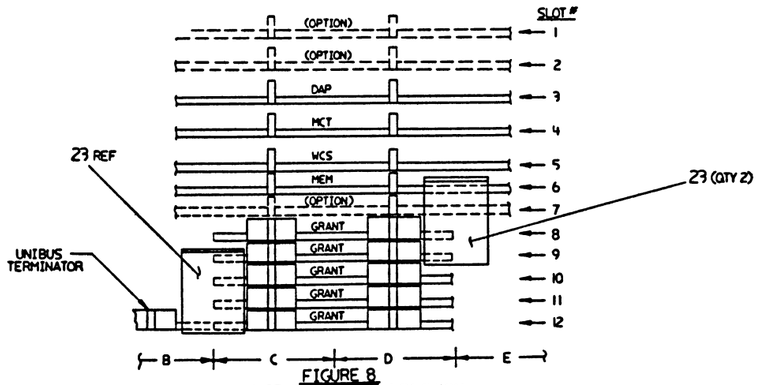

FIGURE 8
MODULE SPACER LOCATION
ON STANDARD UNIT ASSY

REVISION HISTORY		
DATE	ECO NUMBER	REV

TITLE	11730-Z UNIT ASSY	
SIZE E	CODE UA	DOCUMENT NUMBER 11730-Z-0
SCALE	SHEET 4 OF 11	REV A

TW

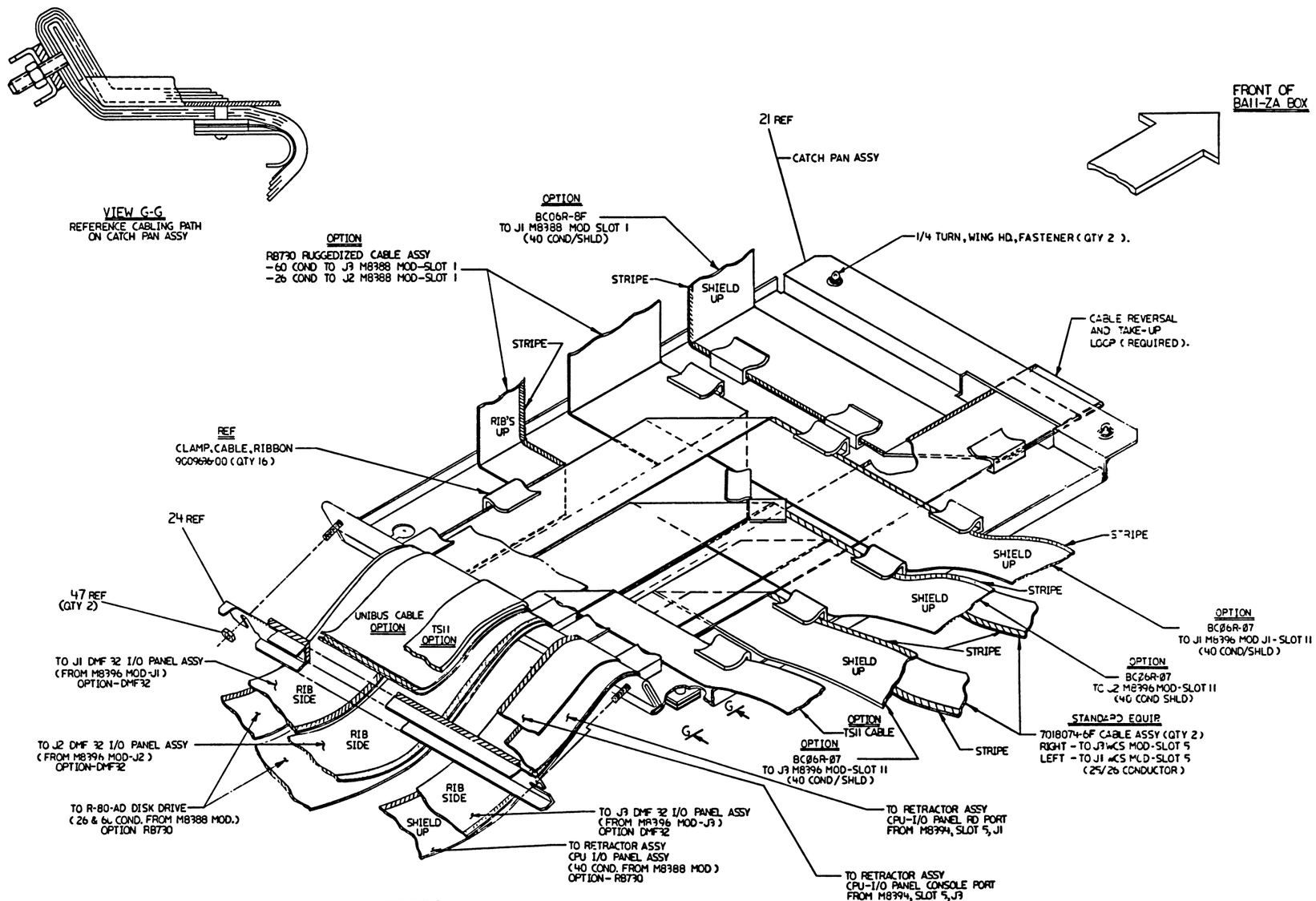

FIGURE 2
SCALE: NONE

CAUTION: VIEW ROTATED 180°.

UNLESS OTHERWISE SPECIFIED DIMENSIONS ARE IN INCHES AND THE FOLLOWING TOLERANCES APPLY (PER DEC STD 114)

DO NOT SCALE DRAWING

REMOVE BURRS AND BREAK SHARP CORNERS

TITLE: 11730-Z UNIT ASSY

DOCUMENT NUMBER: E UA 11730-Z-0 A

SHEET 5 OF 11

TW

1981

FIGURE 3

STANDARD O.E.M. CPU UNIT ASSY

BASIC UNIT, WITHOUT OPTIONS, WILL BE SUPPLIED WITH 2 EA 7018074-0F CABLE ASSY

NOTE

OEM CPU UNIT ASSY, WHEN IN SHIPPING PACKAGE WILL HAVE 2 WCS CABLES ALREADY INSTALLED FROM MODULE, THRU CATCH PAN ASSY, CAPTURED BY CLAMP (ITEM 24), AND TAPED TO UNDERSIDE OF CATCH PAN. ITEMS 22 & 32 MUST BE MOUNTED BEFORE CPU IS INSTALLED ON SLIDES IN CABINET. CABLING LAYOUT PROCEEDS AS SHOWN IN FIG. 3 & SECTION K-K.

NOTE:
1. UNIBUS OPTION AND TS11 OPTION CANNOT BE USED TOGETHER IN CPU.

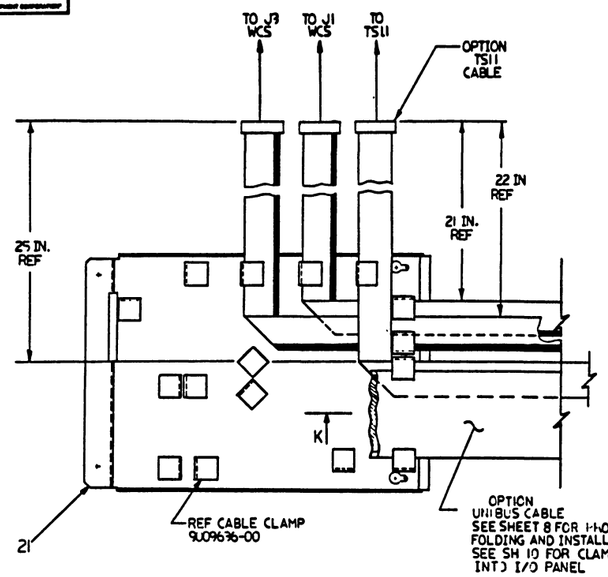

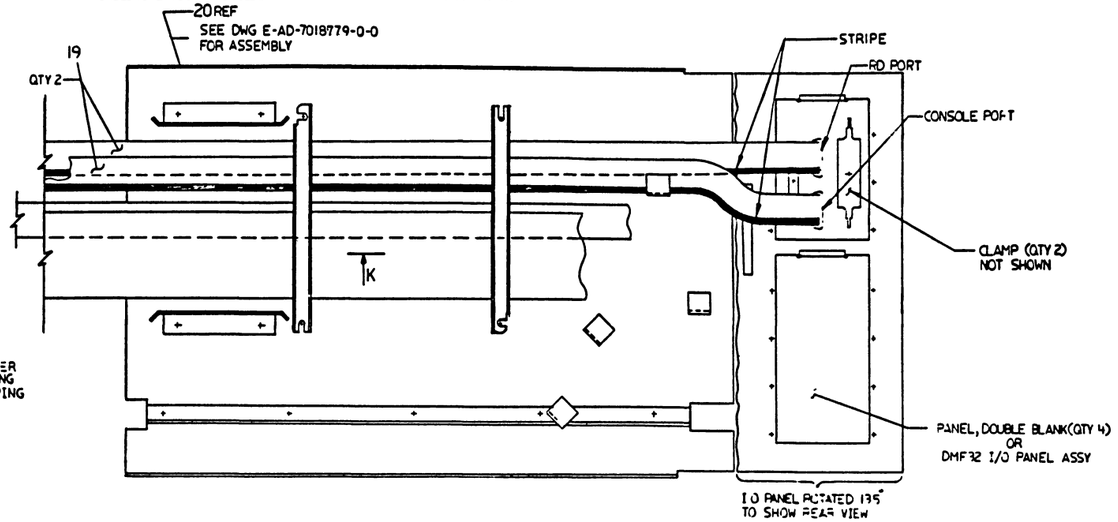

ALL CABLE LEVELS MUST BE STRAIGHTENED AND POSITIONED BETWEEN 2 EXISTING STANDOFFS BEFORE INSTALLING PRESSURE SHEET ASSY AND GLIDE-CLAMP

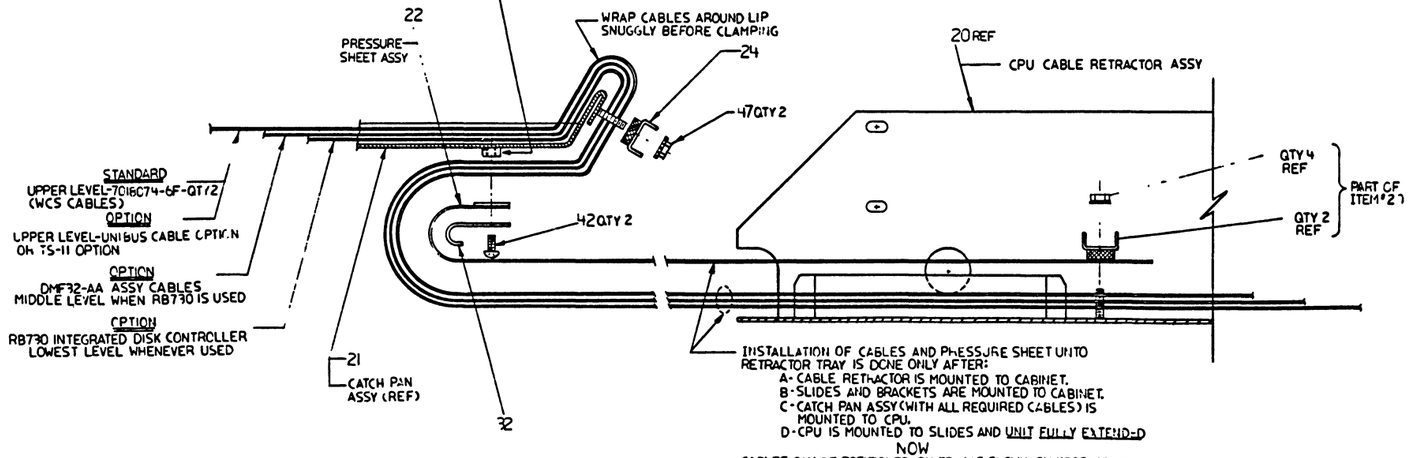

INSTALLATION OF CABLES AND PRESSURE SHEET UNTO RETRACTOR TRAY IS DONE ONLY AFTER:
- A - CABLE RETRACTOR IS MOUNTED TO CABINET.
- B - SLIDES AND BRACKETS ARE MOUNTED TO CABINET.
- C - CATCH PAN ASSY (WITH ALL REQUIRED CABLES) IS MOUNTED TO CPU.
- D - CPU IS MOUNTED TO SLIDES AND UNIT FULLY EXTENDED

NOW

CABLES CAN BE POSITIONED ON TRAY AS SHOWN ON RESPECTIVE STANDARD OR OPTION VIEW (FROM SHEETS 6 AND 7). PULL CABLES AND PRESSURE SHEET GENTLY TO FORM TO GUIDE & CLAMP (ITEM 32) AND INSTALL CABLE CLAMPS.

SECTION K-K (FIG 3,4&5)

TYPICAL ASSY FOR ALL CONFIGURATIONS

SHEET 6 - UPPER VIEW - STANDARD O.E.M. CPU CABLING (WCS MODULE)
SHEET 6 - UPPER VIEW - UNIBUS CABLE OR TS-11 OPTION
SHEET 7 - UPPER VIEW - DMF32-AA OPTION
SHEET 7 - LOWER VIEW - RB730 OPTION

REVISION HISTORY

DATE	ECO NUMBER	REV

TITLE: 11730-Z UNIT ASSY

DOCUMENT NUMBER: E UA 11730-Z-0 A

SCALE — SHEET 5 OF 11

11730-Z-0 A

THIS DRAWING AND SPECIFICATIONS, HEREIN, ARE THE PROPERTY OF DIGITAL EQUIPMENT CORPORATION AND SHALL NOT BE REPRODUCED OR COPIED OR USED IN WHOLE OR IN PART AS THE BASIS FOR THE MANUFACTURE OR SALE OF ITEMS WITHOUT WRITTEN PERMISSION.
COPYRIGHT © 1981 DIGITAL EQUIPMENT CORPORATION

FIGURE 4
OPTION

DMF32-AA MULTI-FUNCTION MODULE

NOTE: SAME RULES APPLY FOR CABLING AS SHOWN ON SH.6, SECTION K-K

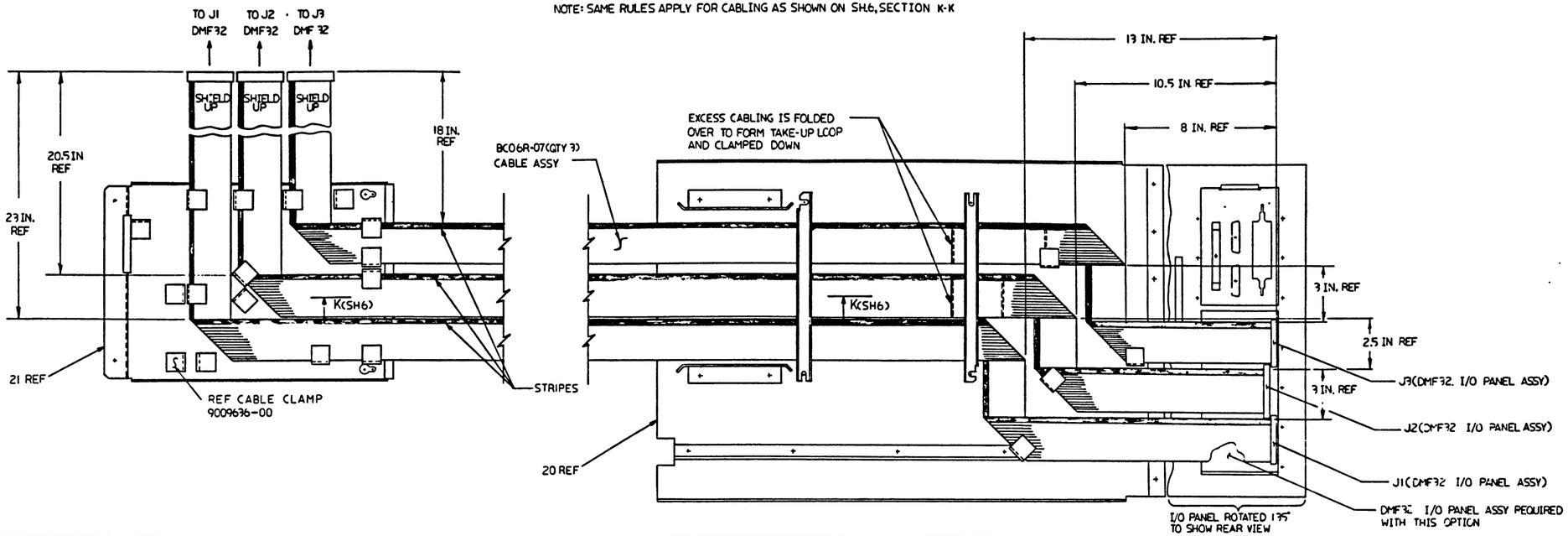

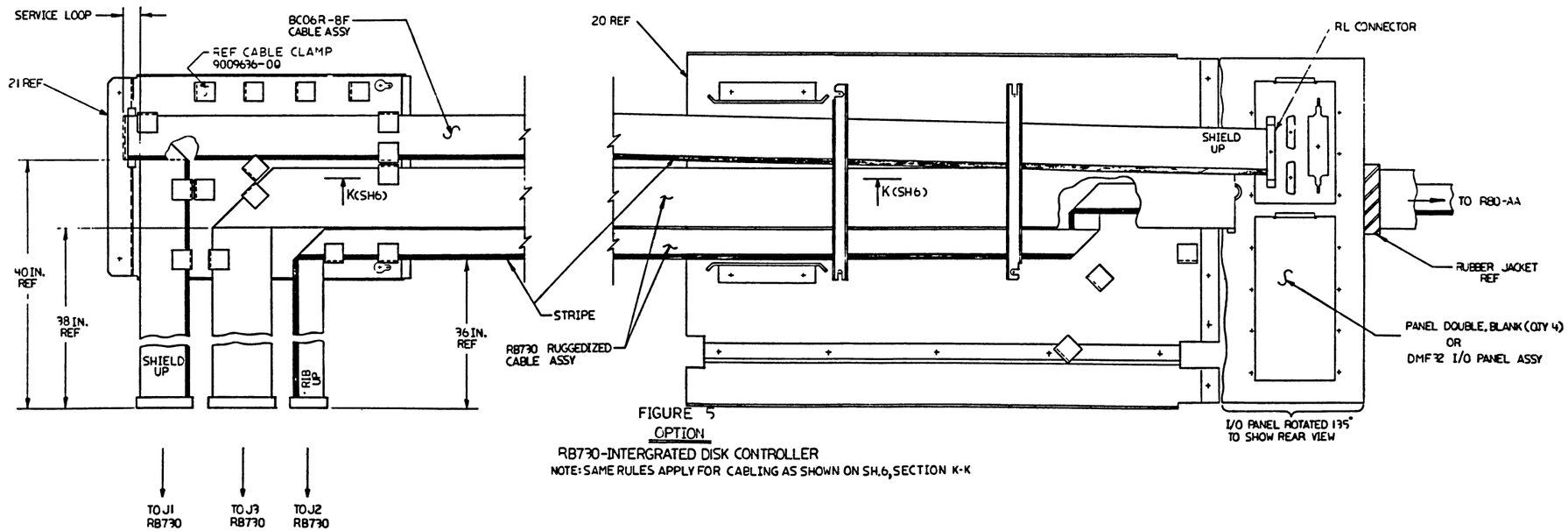

FIGURE 5
OPTION

RB730-INTERGRATED DISK CONTROLLER

NOTE: SAME RULES APPLY FOR CABLING AS SHOWN ON SH.6, SECTION K-K

REVISION HISTORY		
DATE	ECO NUMBER	REV

TITLE: 11730-Z UNIT ASSY

DOCUMENT NUMBER: SIZE E | CODE JA | 11730-Z-0 | REV A

SCALE — | SHEET 7 OF 11

11730-Z-0 REV A

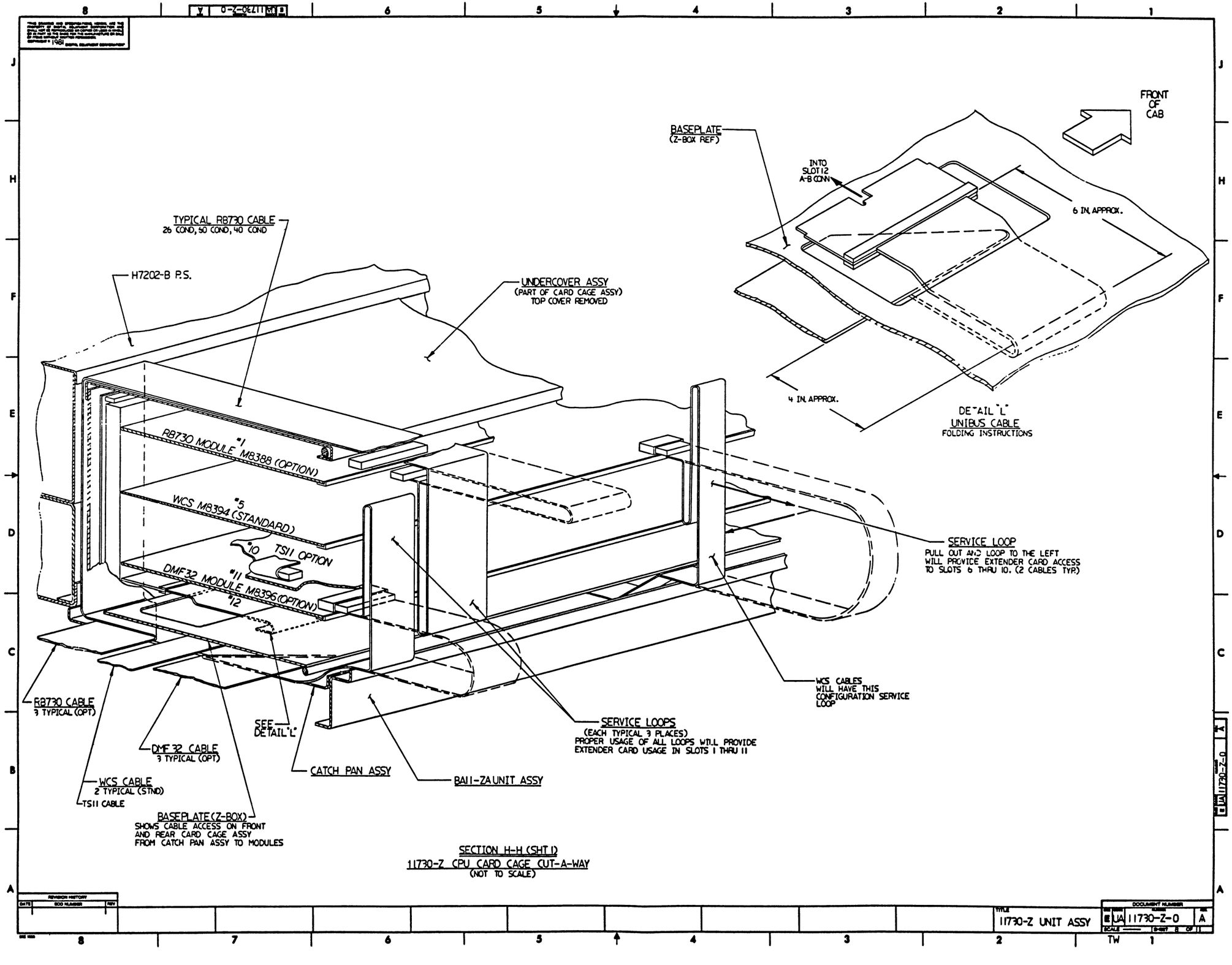

SECTION H-H (SHT 1)
11730-Z CPU CARD CAGE CUT-A-WAY
(NOT TO SCALE)

REVISION HISTORY		
DATE	ECO NUMBER	REV

TITLE: 11730-Z UNIT ASSY

DOCUMENT NUMBER: MP UA 11730-Z-0 A

SCALE: — SHEET 1 OF 1

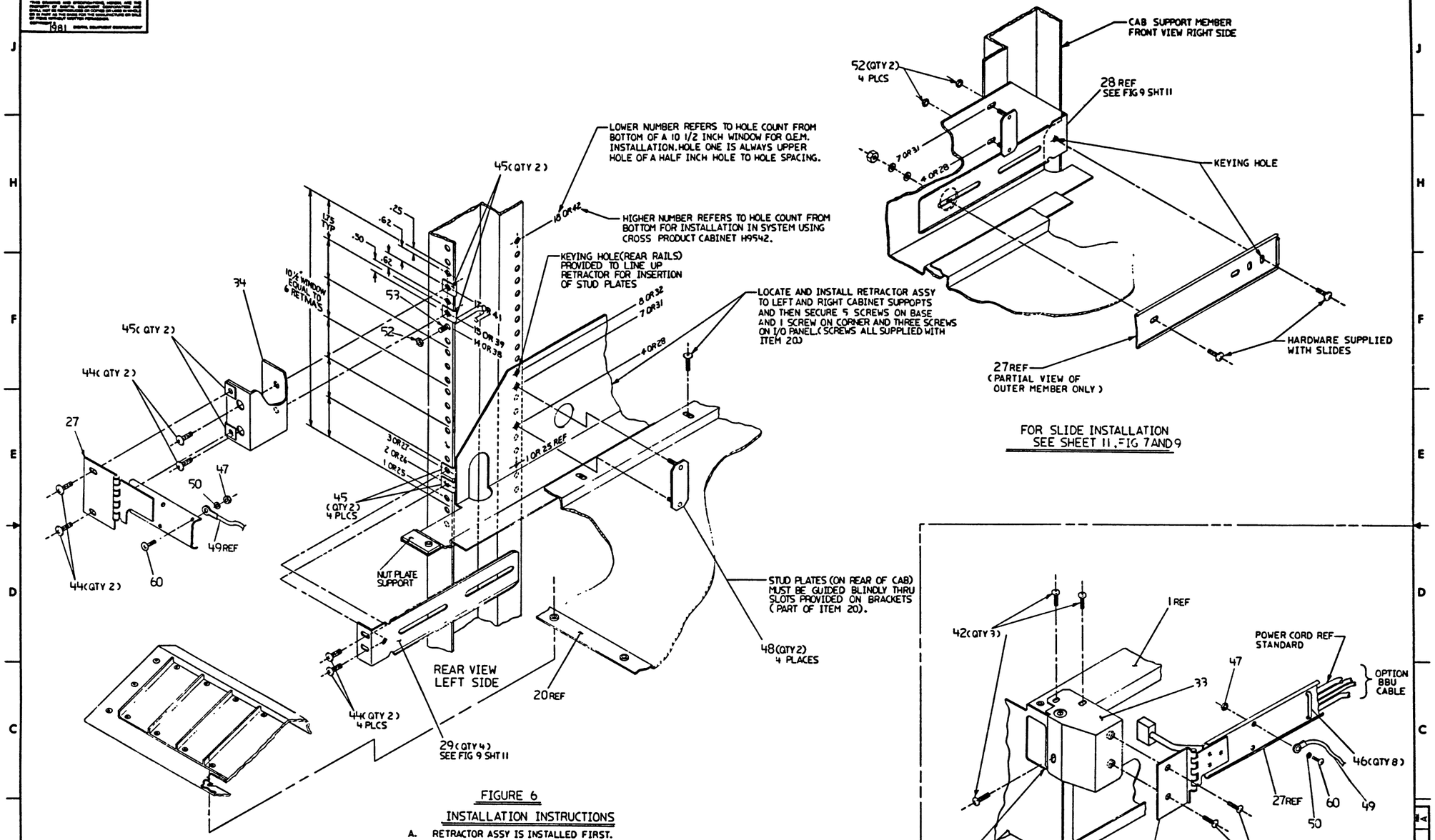

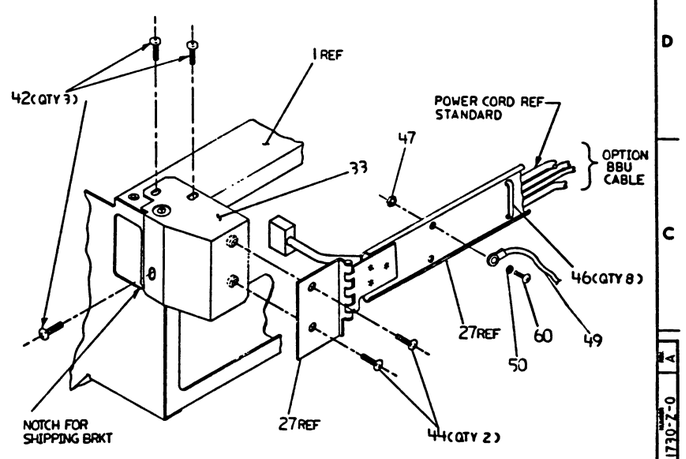

DETAIL "J"
SCALE: NONE

FIGURE 6

INSTALLATION INSTRUCTIONS

A. RETRACTOR ASSY IS INSTALLED FIRST.
B. SLIDES ARE SET UP, SIZED, AND INSTALLED SECOND.
C. CPU IS NEXT INSTALLED ON EXTENDED SLIDES.
D. CATCH PAN ASSY CABLING IS POSITIONED AND INSTALLED.
   NOTE: CAN BE ON CPU BEFORE CPU IS INSTALLED.
E. POSITION AND/OR CONNECT ALL CABLING TO RETRACTOR ASSY.
F. POSITION AND MOUNT CABLE CARRIER ASSY.
G. CONNECT POWER CABLES AND OPTIONAL BBU CABLES.
H. MOUNT ALL COVERS SECURELY.
I POSITION MAGNETIC LATCH FOR PROPER CPU CLOSURE.
J INSTALL TETHER LINE CABLE CARRIER.

NOTE

FOR OEM SHIPPING, ALL LOOSE HARDWARE REQUIRED, WILL BE KITTED AND BAGGED UNDER DEC P/N 11730-Z-3.

REVISION HISTORY
DATE | ECO NUMBER | REV

TITLE: 11730-Z UNIT ASSY
DOCUMENT NUMBER: SIZE E | CODE UA | 11730-Z-0 | REV A
SCALE | SHEET 9 OF 11

11730-Z-0 A

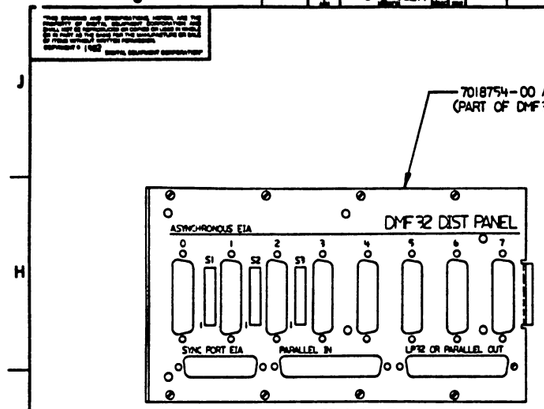

VIEW T-T
DMF 32 OPTION
DISTRIBUTION PANEL MTG PLATE
CONNECTOR INFORMATION LEGEND

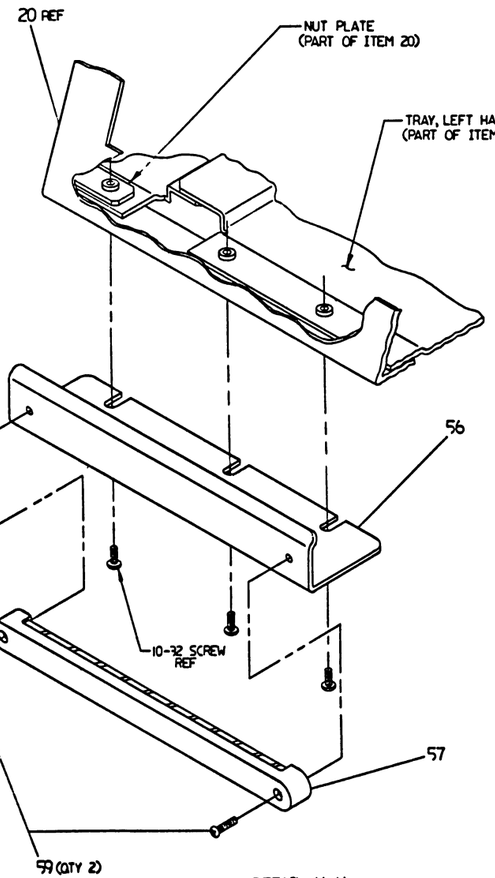

DETAIL U-U

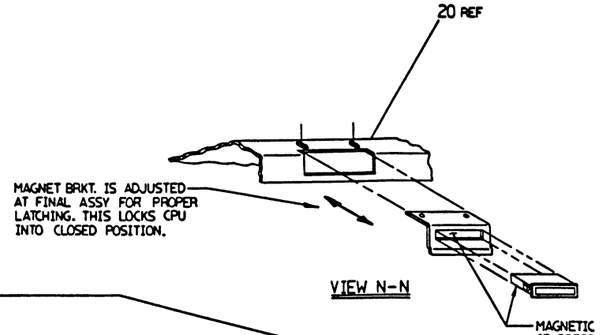

VIEW N-N

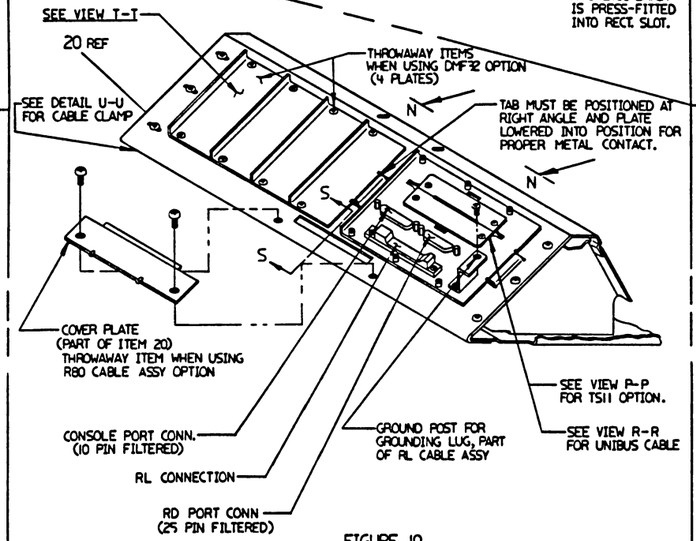

FIGURE 10
FROM SHT. 1 AND SHT. 9

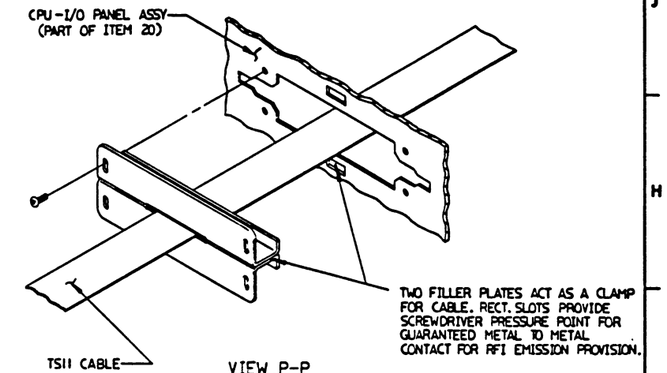

VIEW P-P
TSII CABLE OPTION

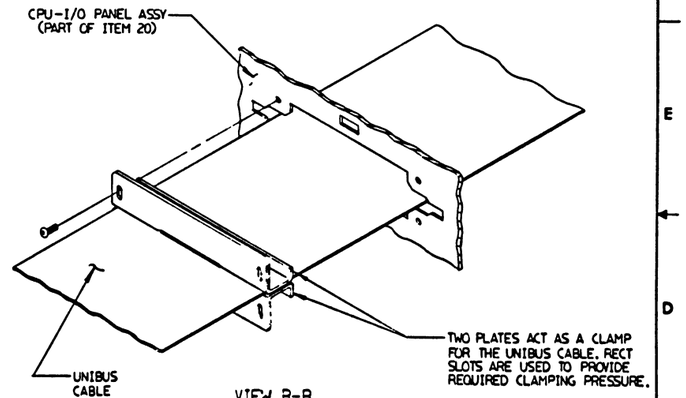

VIEW R-R
UNIBUS CABLE OPTION

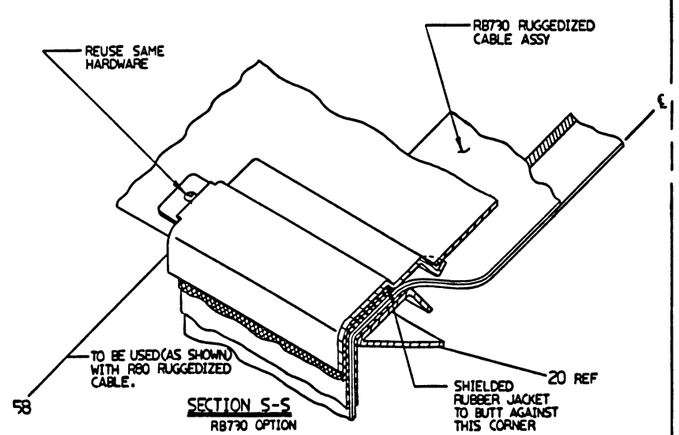

SECTION S-S
RB730 OPTION

REVISION HISTORY		
DATE	ECO NUMBER	REV

TITLE	DOCUMENT NUMBER	SIZE
11730-Z UNIT ASSY	MA 11730-Z-0	A
	SCALE —	SHEET 10 OF 11

TW

NOTES:

1. IF SLIDE MTG. BRACKETS ARE MOUNTED BEFORE SIZING TO REQUIRED LENGTH, ACCESS HOLES HAVE BEEN PROVIDED ON RETRACTOR ASSY FOR OPEN END OR BOX WRENCH.
2. FRONT MTG SLOTS ON SLIDE MTG BRKTS WILL PROVIDE ADJUSTMENT TO PREVENT SLIDES FROM BINDING DURING TRAVEL. SPACING ON EACH SIDE (CAB TO SLIDE) SHOULD BE ABOUT THE SAME.
3. OFFSET HOLES IN SLIDE MTG BRKTS PROVIDE PROPER CLEARANCE BETWEEN CPU AND RETR. TRAV. THESE BRKTS MUST BE MOUNTED AS SHOWN.

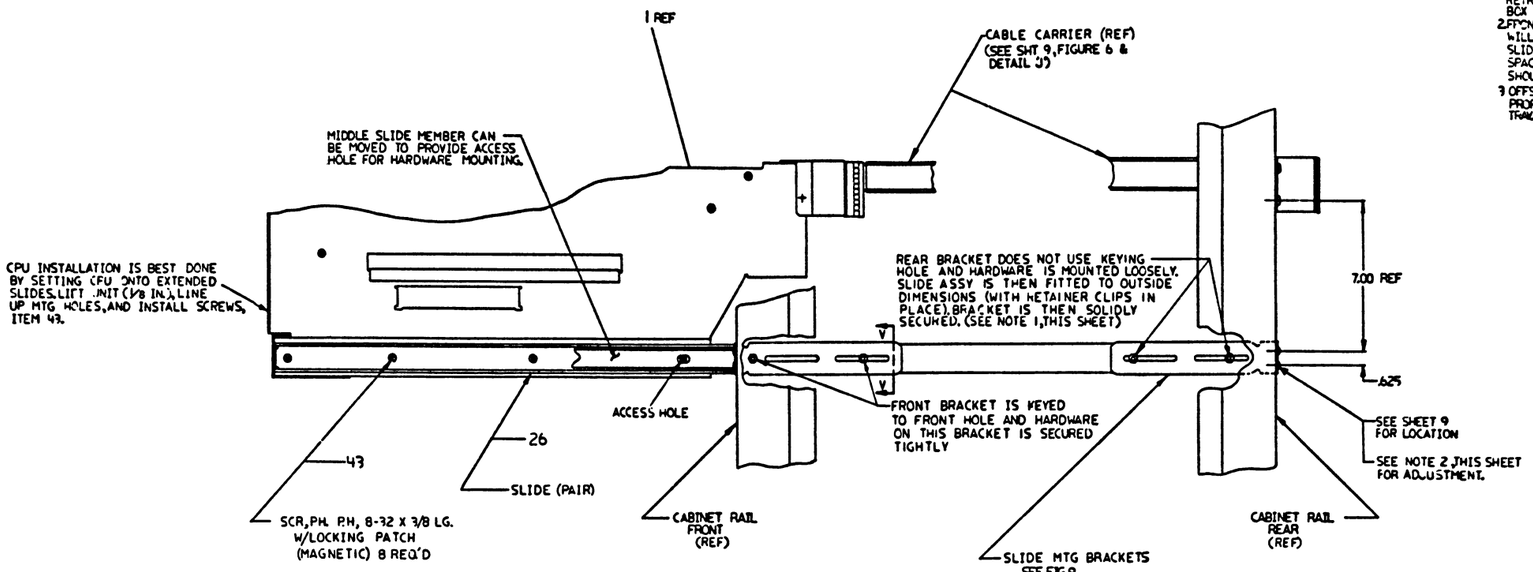

FIGURE 7
SCALE: NONE

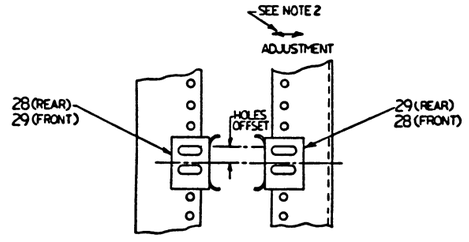

FIGURE 9
CAB FRONT VIEW
SCALE: NONE
SEE NOTE 3

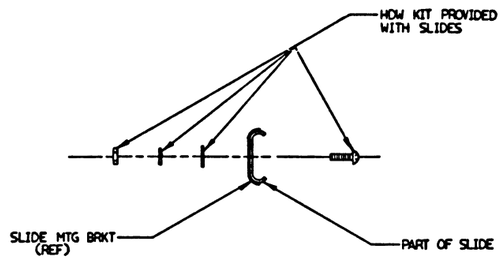

TITLE	DOCUMENT NUMBER		
11730-Z UNIT ASSEMBLY	E UA	11730-Z-0	A
	SCALE -/-	SHEET 1 OF 1	

TW 1

AUTOMATED BY PRTLST.3P(44) P A R T S L I S T SHEET A1 OF A2

LINE	ITEM	DOCUMENT NUMBER	PART NUMBER	DESCRIPTION	QUANTITY PER VARIATION ZA
1	1	E-UA-BA11-Z-0	0BA11-ZA	10.5" BASIC BOX,H7202-B,120V & 2	1
2	2		3615839-00	TAPE,MAGNETIC CARTRIDGE .150W X	1
3	3	E-AD-7018079-0-0	7018079-00	CONSOLE ASSY TU58	1
4	4	E-AD-7018114-0-0	7018114-00	DUAL TU58 DRIVE ASSY.	1
5	5	B-DD-RB730-0	RB730-00	INTEGRATED DISK CONTROL FOR 1 R8	REF
6	6	B-DD-FP730-0	FP730-00	FLOATING POINT PROCESSOR (M8389)	REF
7	7	B-DD-KA730-A	KA730-A	CPU MOD SET	1
8	8	D-UA-M8390-0-0	M8390-00	DAP (DATA PATH)	REF
9	9	D-UA-M8391-0-0	M8391-00	MCT (MEMORY CONTROLLER) HEX	REF
10	10	D-UA-M8394-0-0	M8394-00	WRITEABLE CONTROL STORE,HEX,FOR	REF
11	11	B-DD-MS730-C	MS730-CA	1MB MOS MEM ECC MEMORY EXPANSION	1
12	12	B-DD-G7273-0	G7273-00	BUS GRANT & NON-PROCESSOR GRANT	5
13	13	B-DD-DMF32-0	DMF32-AA	8 EIA ASYNC SLU,SYNC SLU,PARALLE	REF
14	14	B-DD-M9302-0	M9302-00	UNIBUS TERMINATOR	1
15	15	D-IA-7011411-0-0	7011411-01	CABLE, CONSOLE BACKPLANE	1
16	16	D-IA-7011411-0-0	7011411-3D	CABLE, CONSOLE BACKPLANE	1
17	17	D-IA-7011411-0-0	7011411-YA	CABLE, CONSOLE BACKPLANE	1
18	18	D-IA-7018109-0-0	7018109-3B	TU58 POWER CABLE	1
19	19	C-IA-7018074-0-0	7018074-6F	BERG TO D SUB-MINATURE CABLE	2
20	20	E-AD-7018779-0-0	7018779-00	CPU CABLE RETRACTOR ASSY	1
21	21	C-IA-7018720-0-0	7018720-00	CATCH PAN ASSY.	1
22	22	C-IA-7018718-0-0	7018718-00	PRESSURE SHEET ASSY.	1
23	23	A-PS-1209856-0-0	1209856-02	CLIP, MODULE HOLDER W/O SEPARA	2
24	24	C-IA-7018772-0-0	7018772-00	CLAMP ASSY.	1
25	25	A-PS-1217665-0-0	1217665-03	FILTER,AIR FOAM 020PPI	1
26	26	A-PS-1218166-0-0	1218166-00	CHASSIS SLIDE 24.88 EXTENDED LG	1
27	27	A-PS-1219020-0-0	1219020-00	CABLE CARRIER	1
28	28	D-MD-7425374-0-0	7425374-01	SLIDE MOUNTING BRACKET,RIGHT	2
29	29	D-MD-7425374-0-0	7425374-00	SLIDE MTG BRACKET LEFT	2
30	30	A-PS-1700083-0-0	1700083-22	PWR CORD,TERM. 84IN,18-3 125V 15	REF

REVISION HISTORY			BASIC PART NO: 11730										
ENG	ECO NUMBER	REV	SECTION A OF A	DRN: P. TOUSIGNANT	DATE: 24-FEB-82		D	I	G	I	T	A	L
	INITIAL	A	SECTION. VARIATION INDEX [A] ZA	CHK'D: R. MORIN	DATE: 24-FEB-82	TITLE PARTS LIST. 11730-Z UNIT ASSY							
			[B]	DES.ENG.: R. MORIN	DATE: 24-FEB-82								
			[C]	RESP.ENG.: R. MORIN	DATE: 24-FEB-82	DOCUMENT NUMBER							
			[D]			SIZE: K	CODE: PL	NUMBER: 11730-Z-DBP				REV: A	
			[E]	MFG.ENG.: S. CASTIGLIONE	DATE: 24-FEB-82								
			[F]	ASSEMBLY NUMBER: E-UA-11730-Z-0	TOP DOCUMENT NUMBER: #B-DD-11730-Z	FILE NAME: Z2842A.PLS						EDIT #: 19	

"THIS DRAWING AND SPECIFICATIONS HEREIN, ARE THE PROPERTY OF DIGITAL EQUIPMENT CORPORATION AND SHALL NOT BE REPRODUCED OR COPIED OR USED IN WHOLE OR IN PART AS THE BASIS FOR THE MANUFACTURE OR SALE OF ITEMS WITHOUT WRITTEN PERMISSION.
COPYRIGHT (C) 1982. DIGITAL EQUIPMENT CORPORATION "

LINE	ITEM	DOCUMENT NUMBER	PART NUMBER	DESCRIPTION	QUANTITY PER VARIATION ZA
31	31	A-PS-1700083-0-0	1700383-21	PWR CORD,TERM. 84IN,18-3 250V 6	1
32	32	C-MD-7425927-0-0	7425927-00	GUIDE + CLAMP	1
33	33	C-IA-7425928-0-0	7425928-00	BRACKET,CARRIER/BOX	1
34	34	C-MD-7425929-0-0	7425929-00	BRACKET,CABINET/CARRIER	1
35	35	A-PS-3618537-0-0	3618537-01	LABEL,MODULE UTILIZATION	1
36	36		BET173A-DE	VAX 11730 CONCOLE	1
37	37	A-PS-3617880-0-0	3617880-09	LABEL,NON-COMPLIANT FCC	1
38	38	A-DC-3617674-0-0	3617674-00	LABEL,SERIAL & POWER,UNIVERSAL	1
39	39		9009701-00	SCREW,PAN,PHIL,SEMS 6-32X .312L	2
40	40		9006075-03	SCREW,TRUS,PHIL, 10-32X 3/4	4
41	41		9009636-00	CLAMP, CABLE, FOR FLAT CABLE	2
42	42		9006037-03	SCREW,TRUS,PHIL, 8-32X 3/8	7
43	43		9010309-00	SCREW,PAN,PHIL 8-32X .375L	8
44	44		9009700-00	SCREW,TRUS,PHIL,SEMS10-32X .500L	14
45	45		9007786-00	RETAINER, U-NUT, 10-32	12
46	46		9007031-00	TIE,CABLE BUNDL.DIA 0- 3/4"=101	8
47	47		9006563-00	NUT,KEP 8-32X 11/13AF	4
48	48	B-IA-7426335-0-0	7426335-01	STUD PLATE	4
49	49	A-PS-1215700-0-0	1215700-04	CABLE ASSY,NYLON,11"LG	1
50	50		9006660-00	WASHER, FLAT, .375 O.D. X .187.I	2
51	51	A-PA-3700662-0-0	3700662-01	PKG 11730-ZACPU	1
52	52		9006565-00	NUT,KEP 10-32X 3/8 AF	9
53	53	C-MD-7413659-0-0	7413659-00	BRACKET SHIPPING	1
54	54	A-PS-3613211-0-0	3613211-00	DECAL,CLEAR PREPRINTED CSA 1-1/4	1
55	55	A-PS-3612063-0-0	3612063-00	LABEL, ,ADHESIVE I.D. FOR UL C	1
56	56	D-IA-7426625-0-0	7426625-01	CLAMP,TABLE,DMF	1
57	57	B-IA-7426723-0-0	7426723-01	BARCLAMP ASSY.	1
58	58	D-MD-7426623-0-0	7426623-01	CLAMP,R80 TABLE	1
59	59		9006028-01	SCREW,PAN,PHIL 6-32X1 SS	2
60	50		9006037-01	SCREW,PAN,PHIL 8-32X 3/8 SS	2
61	51	B-PL-11730-Z-5		11730-ZA HARDWARE KIT LIST	REF

RELEASABLE

D	I	G	I	T	A	L	TITLE	SECTION A OF A	SIZE	CODE	DOCUMENT NUMBER	REV
							11730-Z UNIT ASSY		K	PL	11730-Z-DBP	A

DIGITAL EQUIPMENT CORPORATION
PARTS LIST

MADE BY R.P. MORIN DATE 15FEB82 RPM	CHECKED DATE RPMorin	SECTION	
ENG R.P. MORIN DATE 15FEB82 RPM	PROD S.A. Castiglioni DATE 25FEB82	ISSUED SECTION	

NOTES:

ITEM NO.	DRAWING NO.	PART NO.	DESCRIPTION	QUANTITY / VARIATION 11730-ZA	REF DESIGNATION
1	E-UA-11730-Z-0	11730-ZA	11730-Z UNIT ASSY	1	CPU BOX ONLY
2	E-AD-7018779-0-0	7018779-00	CPU CABLE RETRACTOR ASSY	1	
3	C-IA-7018718-0-0	7018718-00	PRESSURE SHEET ASSY	1	
4	D-MD-7425374-0-0	7425374-00	SLIDE MTG BRKT , LEFT	2	
5	D-MD-7425374-0-0	7425374-01	SLIDE MTG BRKT , RIGHT	2	
6	C-MD-7425927-0-0	7425927-00	GUIDE & CLAMP	1	
7	C-IA-7425928-0-0	7425928-00	BRKT , CARRIER/BOX	1	
8	C-MD-7425929-0-0	7425929-00	BRKT , CAB/CARRIER	1	
9	B-IA-7426335-0-0	7426335-01	STUD PLATE	4	
10	D-IA-7426623-0-0	7426623-01	CLAMP , R80 CABLE	1	
11	D-IA-7426625-0-0	7426625-01	CLAMP , DMF CABLE	1	
12	B-IA-7426723-0-0	7426723-01	BAR CLAMP ASSY	1	
13	C-MD-7413659-0-0	7413659-00	BRKT , SHIPPING	1	
14		1215700-04	CABLE , FERRULED	1	
15		1218166-00	SLIDE (PAIR) W/HDW KITS (4)	1	
16		1219020-00	CARRIER , CABLE	1	
17		1700083-21	AC LINE CORD (240V)	1	
18		1700083-22	AC LINE CORD (120V)	1	
19		3615809-00	MEDIA CARTRIDGE , TU58-K	1	
20		3700662-01	PACKAGING , CPU , 11730-ZA	1	
21	B-PL-11730-Z-3	11730-Z-3	HARDWARE KIT BAG	1	

E.C.O. NO.

"THIS DRAWING AND SPECIFICATIONS, HEREIN, ARE THE PROPERTY OF DIGITAL EQUIPMENT CORPORATION AND SHALL NOT BE REPRODUCED OR COPIED OR USED IN WHOLE OR IN PART AS THE BASIS FOR THE MANUFACTURE OR SALE OF ITEMS WITHOUT WRITTEN PERMISSION. COPYRIGHT © DIGITAL EQUIPMENT CORPORATION"

TITLE	ASSY NO.	SIZE	CODE	NUMBER	REV.
SHIPPING LIST ,11730-Z	B-DD-11730-Z	B	PL	11730-Z-2	A
	SHEET 1 OF 1	INSERTION PARTS LIST DATA BASE REV			

DRB 125

TW

DIGITAL EQUIPMENT CORPORATION
PARTS LIST

MADE BY / DATE	R.P.MORIN 15FEB82 RPM	CHECKED / DATE	SECTION
ENG / DATE	R.P.MORIN 15FEB82 RPM	PROD / DATE	ISSUED SECTION

ITEM NO.	DRAWING NO.	PART NO.	DESCRIPTION	QUANTITY / VARIATION 11730-ZA
1.		9006037-03	SCR.TRUS,PHIL,8-32x3/8L	5
2.		9010309-00	SCR,PAN,PHIL,8-32x3/8L W/PATCH	8
3.		9009700-00	SCR,TRUS,PHIL SEMS,10-32x1/2L	14
4.		9007786-00	RETAINER,U-NUT,10-32	12
5.		9007031-00	TIE,CABLE	8
6.		9006563-00	NUT,KEP,8-32	2
7.		9006660-00	WASHER,FLAT,#8	2
8.		9006565-00	NUT,KEP,10-32	1
9.		9006028-01	SCR,PAN,PHIL,6-32x1.0L	2
10.		9006037-01	SCR,PAN,PHIL,3/8L	2
11.		9906557-03	BAG,POLYETHYLENE,RECLOSABLE *	1

* BAG TO BE MARKED PER DEC STD 178.

NOTES:

REF DESIGNATION
(ITEM 42) TO MOUNT PRESSURE SHEET AND CARRIER/BOX BRKT
(ITEM 43) TO MOUNT SLIDES TO CPU
(ITEM 44) TO MOUNT SLIDE MTG BRKTS CAB/CARRIER BRKT,CARRIER/BOX BRKT
(ITEM 45) TO MOUNT SLIDE MTG BRKTS AND CARRIER/CAB BRKTS
(ITEM 46) TO TIE CABLES TO CABLE CARRIER
(ITEM 47) FOR TETHER LINE
(ITEM 50) FOR TETHER LINE
(ITEM 52) FOR SHIPPING BRKT
(ITEM 59) BAR CLAMP TO DMF CABLE CLAMP
(ITEM 60) FOR TETHER LINE

E.C.O. NO.

"THIS DRAWING AND SPECIFICATIONS, HEREIN, ARE THE PROPERTY OF DIGITAL EQUIPMENT CORPORATION AND SHALL NOT BE REPRODUCED OR COPIED OR USED IN WHOLE OR IN PART AS THE BASIS FOR THE MANUFACTURE OR SALE OF ITEMS WITHOUT WRITTEN PERMISSION. COPYRIGHT © DIGITAL EQUIPMENT CORPORATION"

TITLE	ASSY NO.	SIZE	CODE	NUMBER	REV.
HARDWARE KIT LIST,11730-Z	B-DD-11730-Z	B	PL	11730-Z-3	A
	SHEET 1 OF 1	INSERTION PARTS LIST DATA BASE REV			

DRB 125

TW

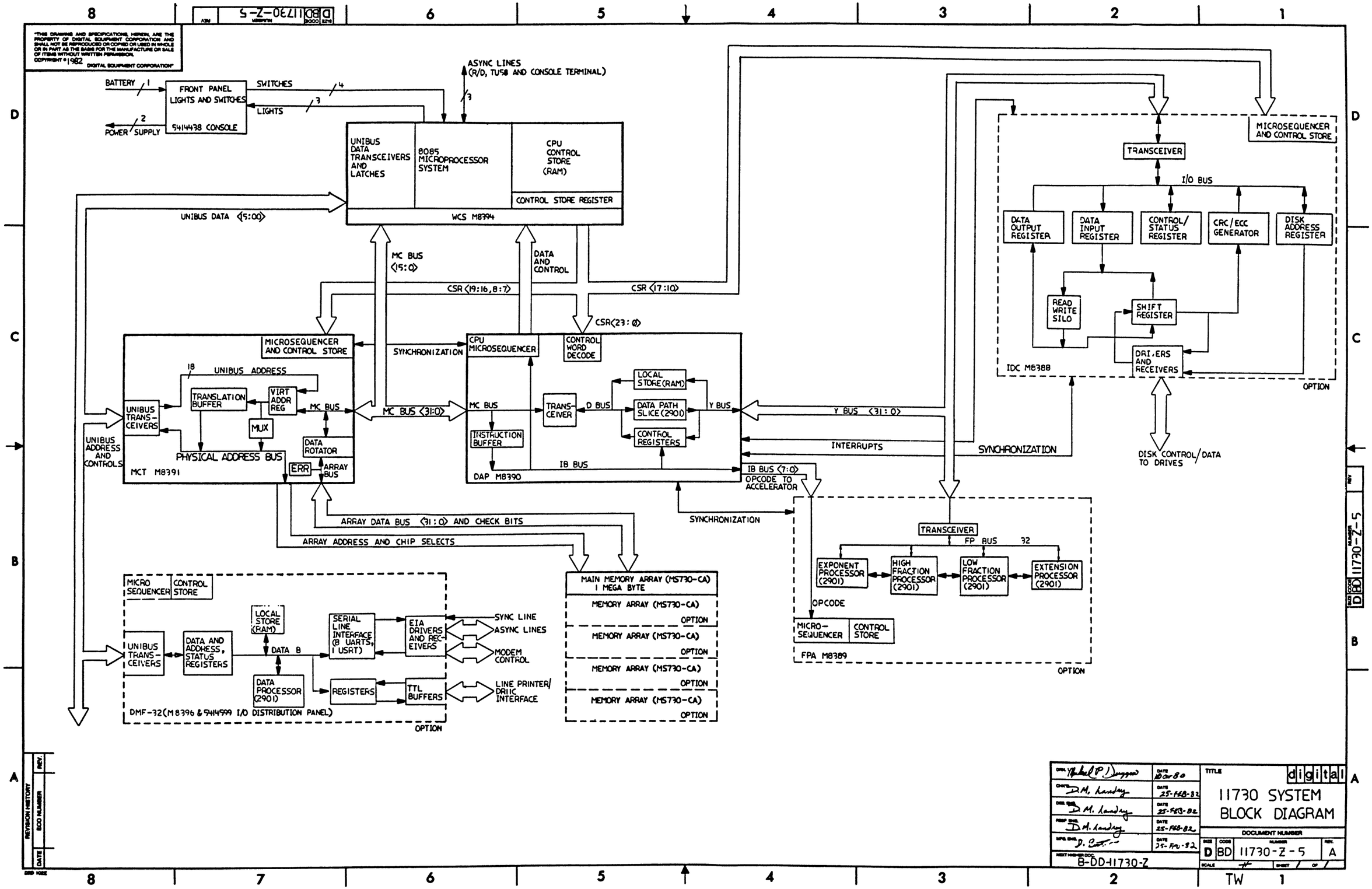

DRN. Michael P. Duggan	DATE 10 Oct 80	TITLE digital
CHK'D. D.M. Landry	DATE 25-FEB-82	11730 SYSTEM BLOCK DIAGRAM
DES. ENG. D.M. Landry	DATE 25-FEB-82	DOCUMENT NUMBER
REP. ENG. D.M. Landry	DATE 25-FEB-82	SIZE D CODE BD NUMBER 11730-Z-5 REV. A
MFG. ENG. D. [illegible]	DATE 25-FEB-82	SCALE # SHEET 1 OF 1
NEXT HIGHER DOC. B-DD-11730-Z		

REVISION HISTORY: REV. / ECO NUMBER / DATE

D BD 11730-Z-5 REV

TW

"THE MATERIAL HEREIN IS FOR INFORMATION PURPOSES ONLY AND IS SUBJECT TO CHANGE WITHOUT NOTICE. DIGITAL EQUIPMENT CORPORATION ASSUMES NO RESPONSIBILITY FOR ANY ERRORS WHICH MAY APPEAR HEREIN."

FIELD MAINTENANCE PRINT SET

"THIS DRAWING AND SPECIFICATIONS, HEREIN, ARE THE PROPERTY OF DIGITAL EQUIPMENT CORPORATION AND SHALL NOT BE REPRODUCED OR COPIED OR USED IN WHOLE OR IN PART AS THE BASIS FOR THE MANUFACTURE OR SALE OF ITEMS WITHOUT WRITTEN PERMISSION. COPYRIGHT © 1982 DIGITAL EQUIPMENT CORPORATION."

TABLE OF CONTENTS

B-TC-BA11-Z-1	FIELD MAINTENANCE PRINT SET MP01266
B-DD-BA11-Z	BA11-Z BOX ASSY-DRAWING DIRECTORY
E-UA-BA11-Z-0	BA11-Z BOX ASSY
K-PL-BA11-Z-DBP	BA11-Z BOX ASSY-PARTS LIST
E-AD-7018081-0-0	MODULE FAN ASSY
K-PL-7018081-0-DBP	MODULE FAN ASSY- PARTS LIST
D-IA-7018161-0-0	DC HARNESS ASSY
K-PL-7018161-0-DBP	DC HARNESS ASSY- PARTS LIST
D-IA-7018162-0-0	SENSOR POWER CABLE
K-PL-7018162-0-DBP	SENSOR POWER CABLE - PARTS LIST
B-DD-5414340-0	AIR FLOW DETECTOR ASSY- DRAWING DIRECTORY
D-UA-5414340-0-0	AIR FLOW DETECTOR ASSY
K-PL-5414340-0-DBP	AIR FLOW DETECTOR ASSY - PARTS LIST
B-DD-7018080-0	11730-Z BACKPLANE ASSY - DRAWING DIRECTORY
D-AD-7018080-0-0	11730-Z BACKPLANE ASSY
K-PL-7018080-0-DBP	11730-Z BACKPLANE ASSY - PARTS LIST
K-WL-7018080-0-1	11730-Z BACKPLANE ASSY - WIRE LIST
A-WT-7018080-0-2	11730-Z BACKPLANE ASSY - REV STATUS
MP02157	H7202 LEM PWR. SUP. FIELD MAINT. PRINT SET (COMPLETE)
D-CS-5414340-0-1	AIR FLOW DETECTOR ASSY - CIRCUIT SCHEMATIC

UNIT VARIATIONS COVERED BY THIS PRINT SET
BA11-ZA

BA11-Z

Field Maintenance Print Set

Digital Equipment Corporation

PRINT SET ORDER

NO MP01266

SIZE	CODE	NUMBER	REV.
B	TC	BA11-Z-1	A

REVISIONS	REV	CHG. NO.	DATE

USED ON OPTION/MODEL	
11730-Z	

SHEET 1 OF 1

DRN.	A. ROCHA	DATE 6JAN82
CHK'D		DATE 28JAN82
PROJ. ENG.		DATE 28JAN82
FIELD SERV.		DATE 16Feb82

digital

TITLE: FIELD MAINT. PRINT SET (BA11-Z)

SIZE	CODE	NUMBER	REV.
B	TC	BA11-Z-1	A

DIST.

DRB 124

TW

"THE MATERIAL HEREIN IS FOR INFORMATION PURPOSES ONLY AND IS SUBJECT TO CHANGE WITHOUT NOTICE. DIGITAL EQUIPMENT CORPORATION ASSUMES NO RESPONSIBILITY FOR ANY ERRORS WHICH MAY APPEAR HEREIN."

DRAWING DIRECTORY

"THIS DRAWING AND SPECIFICATIONS, HEREIN, ARE THE PROPERTY OF DIGITAL EQUIPMENT CORPORATION AND SHALL NOT BE REPRODUCED OR COPIED OR USED IN WHOLE OR IN PART AS THE BASIS FOR THE MANUFACTURE OR SALE OF ITEMS WITHOUT WRITTEN PERMISSION. COPYRIGHT © 1981 DIGITAL EQUIPMENT CORPORATION.

UNIT VARIATIONS

VAR	TITLE
BA11-ZA	10½" Z BOX,H7202-B P.S.,11730-Z BKPL,120V & 240V

REVISIONS

REV.	CHANGE NO.	CHK

USED ON OPTION/MODEL

11730

SHEET 1 OF 4

DRN. A. ROCHA	DATE 3AUG81	
CHK'D. B.MORIN	DATE 3AUG81	
PROJ. ENG. B.MORIN	DATE 3AUG81	
PROD. S.Castyline	DATE 25AUG81	

TITLE

digital

BA11-Z BOX ASSY

SIZE	CODE	NUMBER	REV
B	DD	BA11-Z	A

DIST.

DRB 106A

TW

"THIS DRAWING AND SPECIFICATIONS, HEREIN, ARE THE PROPERTY OF DIGITAL EQUIPMENT CORPORATION AND SHALL NOT BE REPRODUCED OR COPIED OR USED IN WHOLE OR IN PART AS THE BASIS FOR THE MANUFACTURE OR SALE OF ITEMS WITHOUT WRITTEN PERMISSION. COPYRIGHT © 1981 DIGITAL EQUIPMENT CORPORATION"

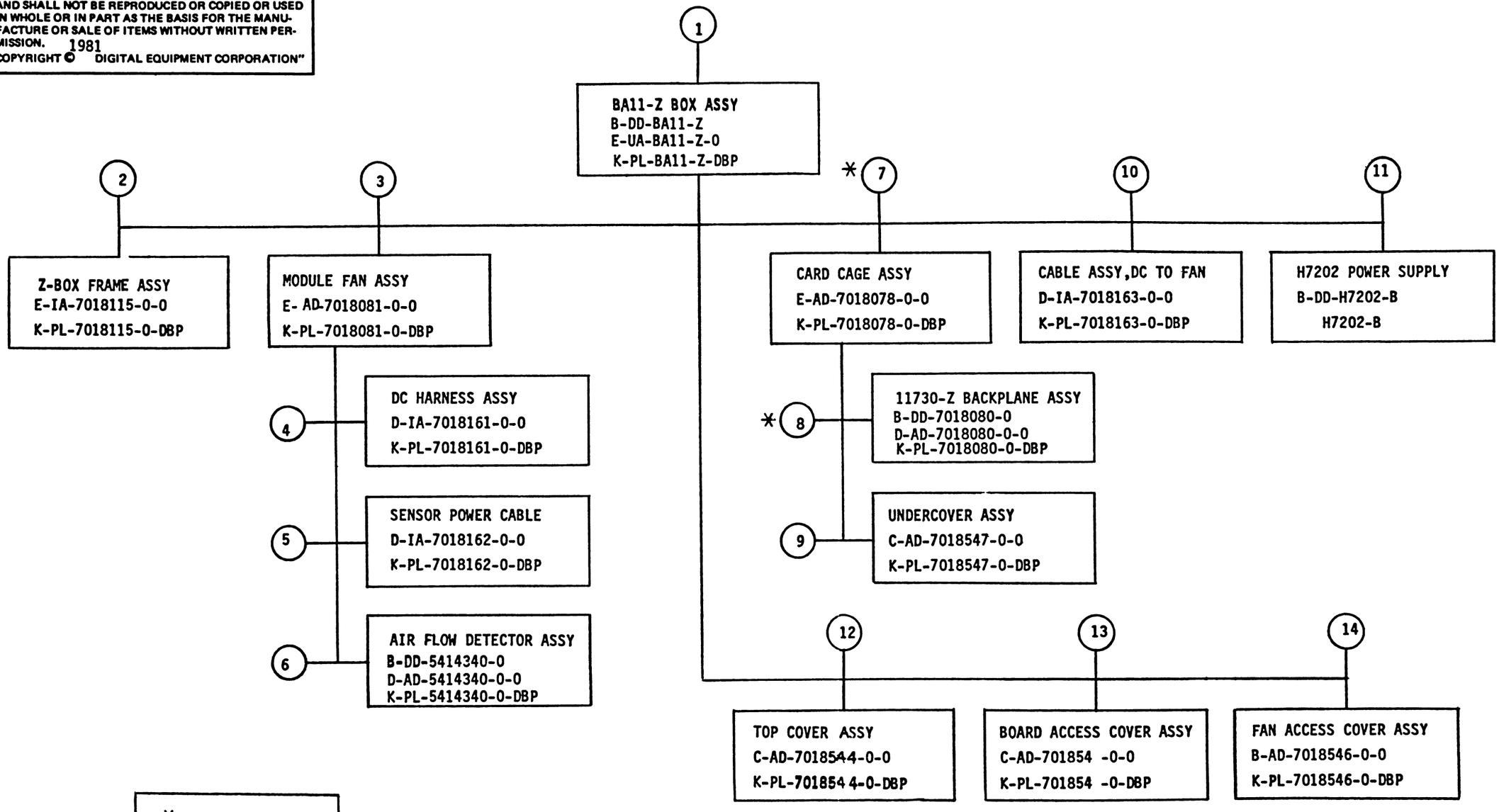

*= SPECIFIC TO 11730-Z NEBULA SYSTEM.

TITLE	SHEET	SIZE	CODE	NUMBER	REV
BA11-Z BOX ASSY	2 OF 4	B	DD	BA11-Z	A

TW

FIND NO.	DRAWING NO.	DESCRIPTION	TYPE
1	MP01266	FIELD MAINT. PRINT SET (MP)	-
	B-TC-BA11-Z-1	FIELD MAINT. PRINT SET (TC)	-
	B-DD-BA11-Z	BA11-Z BOX ASSY-DRAWING DIRECTORY	-
	E-UA-BA11-Z-0	BA11-Z BOX ASSY-UNIT ASSY	E/M
	K-PL-BA11-Z-DBP	BA11-Z BOX ASSY-PARTS LIST Z1862	-
	D-MD-7424850-0-0	BAFFLE , END PLATE	M
	C-IA-7425373-0-0	CLAMP , POWER SUPPLY	M
	C-MD-7425571-0-0	WIRE , SUPPORT	M
	A-PS-1217556-0-0	FAN DC	E/M
	A-PS-1700083-0-0	AC LINE CORD	E/M
2	E-IA-7018115-0-0	Z-BOX FRAME ASSY	M
	K-PL-7018115-0-DBP	Z-BOX CHASSIS ASSY-PARTS LIST Z1858	-
	E-IA-7424819-0-0	BASEPLATE	M
	K-PL-7424819-0-DBP	BASEPLATE-PARTS LIST Z1859	-
	E-IA-7424820-0-0	WALL , LEFT SIDE	M
	E-IA-7424821-0-0	WALL , RIGHT SIDE	M
	E-MD-7424822-0-0	SHELF SUPPORT	M
	E-MD-7424823-0-0	BRACE FRONT	M
3	E-AD-7018081-0-0	MODULE FAN ASSY	E/M
	K-PL-7018081-0-DBP	MODULE FAN ASSY-PART LIST	-
	D-MD-7424831-0-0	FAN HOUSING	M
	C-MD-7424849-0-0	FAN BAFFLE	M
	A-PS-1217556-0-0	FAN DC	M
4	D-IA-7018161-0-0	DC HARNESS ASSY	E/M
	K-PL-7018161-0-DBP	DC HARNESS ASSY-PARTS LIST Z1851	-
5	D-IA-7018162-0-0	SENSOR POWER CABLE	E/M
	K-PL-7018162-0-0	SENSOR POWER CABLE-PARTS LIST Z1862	-
6	B-DD-5414340-0	AIR FLOW DETECTOR ASSY	E/M
	D-UA-541434-0-0	AIR FLOW DETECTOR ASSY	E/M
	K-PL-5414340-0-DBP	AIR FLOW DETECTOR ASSY - PARTS LIST	-
	D-CS-5414340-0-1	AIR FLOW DETECTOR ASSY - CIRCUIT SCHEM.	E
7	E-AD-7018078-0-0	11730-Z CARD CAGE ASSY *	M
	K-PL-7018078-0-DBP	11730-Z CARD CAGE ASSY-PARTS LIST Z1828	-
	C-MD-7423051-0-0	ROD , SUPPORT	M
	E-IA-7424830-0-0	CARD CAGE (FRONT AND REAR)	M
	B-MD-7425257-0-0	CARD GUIDE,SINGLE SHORT	M
	A-PS-1212405-0-0	CARD GUIDE,NYLON	M
8	B-DD-7018080-0-0	11730-Z BACKPLANE ASSY-DRAWING DIRECTORY	E/M
	D-AD-7018080-0-0	11730-Z BACKPLANE ASSY *	E/M
	K-PL-7018080-0-DBP	11730-Z BACKPLANE ASSY-PARTS LIST Z0715	-
	K-WL-7018080-0-1	11730-Z BACKPLANE ASSY - WIRELIST	E
	A-WT-7018080-0-2	11730-Z BACKPLANE ASSY - REV STATUS	-
	A-DC-7411881-0-0	LABEL,AWT REV STATUS	-
	D-MD-7425344-0-0	PROTECTIVE COVER	M
	C-MD-7425372-0-0	SPACER	M
	A-PS-1700238-0-0	CIRCUIT,FLEX,SIGNAL	E/M
	A-PS-1700239-0-0	CIRCUIT,FLEX,POWER	E/M
	E-MD-5014598-0-0	DRILL AND ETCH BOARD	E/M
9	C-AD-7018547-0-0	UNDERCOVER ASSY	M
	K-PL-7018547-0-DBP	UNDERCOVER ASSY-PARTS LIST Z2449	-
	E-MD-7424829-0-0	UNDERCOVER	M

* SPECIFIC FOR 11730-Z ASSY.

TYPE: E ELECTRICAL
M MECHANICAL
E/M ELECTRO/MECHANICAL

digital

TITLE	SHEET	SIZE	CODE	NUMBER	REV
BA11-Z BOX ASSY	3 OF 4	B	DD	BA11-Z	A

DRB 108A

TW

FIND NO.	DRAWING NO.	DESCRIPTION	TYPE
10	D-IA-7018163-0-0	CABLE,DC TO FAN	E/M
	K-PL-7018163-0-DBP	CABLE,DC TO FAN-PARTS LIST Z1853	-
11	MP02157	H7202 POWER SUPPLY PRINT SET (MP)	-
	B-TC-H7202-0-1	H7202 POWER SUPPLY - (TC)	-
	B-DD-H7202-B	H7202 POWER SUPPLY	E/M
12	C-AD-7018544-0-0	TOP COVER ASSY	M
	K-PL-7018544-0-DBP	TOP COVER ASSY-PARTS LIST Z2444	-
	E-MD-7424827-0-0	TOP COVER	M
13	C-AD-7018545-0-0	BOARD ACCESS COVER ASSY	M
	K-PL-7018545-0-DBP	BOARD ACCESS COVER ASSY-PARTS LIST Z2577	-
	D-MD-7424824-0-0	BOARD ACCESS COVER	M
14	B-AD-7018546-0-0	FAN ACCESS COVER ASSY	M
	K-PL-7018546-0-DBP	FAN ACCESS COVER ASSY-PARTS LIST Z2578	-
	C-MD-7424825-0-0	FAN ACCESS COVER ASSY	M

FIND NO.	DRAWING NO.	DESCRIPTION	TYPE

TYPE: E ELECTRICAL
M MECHANICAL
E/M ELECTRO/MECHANICAL

digital

TITLE	SHEET	SIZE	CODE	NUMBER	REV
BA11-Z BOX ASSY	4 OF 4	B	DD	BA11-Z	A

DRB 108A

TW

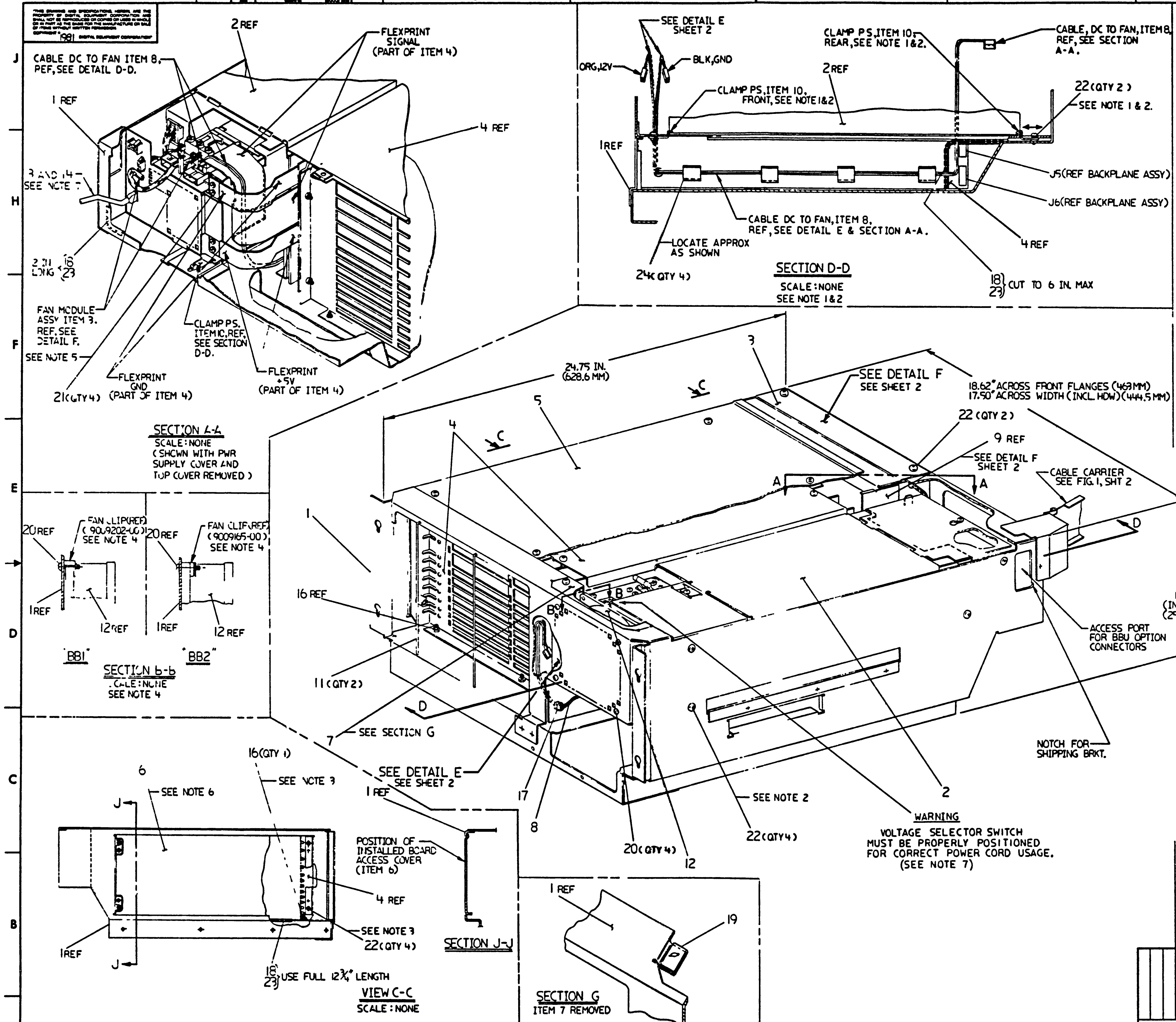

NOTES:

1. INSTALL ITEM 10 CLAMP PS QTY 2 LOOSELY TO ACCEPT POWER SUPPLY WHEN INSTALLED.
2. INSTALLATION OF POWER SUPPLY:
   REMOVE FAN ACCESS COVER (ITEM 7) AND LOWER POWER SUPPLY (ITEM 2) INTO PLACE BY TILTING REAR END ONTO BRACKET AND SEATING FRONT END. NOW SLIDE POWER SUPPLY (SEE SECTION D-D) TO CATCH UNDER FRONT CLAMP AND SLIDE REAR CLAMP INTO POSITION, INSTALL 4 SCREWS (ITEM 22) INTO RIGHT HAND WALL AND TIGHTEN CLAMP SCREWS (2 PLACES). NOTE: CLAMP SCREWS REQUIRE ONLY 3 OR 4 TURNS, MAXIMUM, TO LOOSEN OR TIGHTEN FOR SLIDING ACTION. NOW CONNECT FLEXPRINTS (QTY 3) AND CONNECTORS AS SHOWN (SEE SECTION A-A).
3. INSTALL CARD CAGE (ITEM 4) SQUARELY AND CENTERED. SCREW TIGHTENING PROGRESSION IS REQUIRED TO SEAT FIRMLY.
4. ITEM 12, 12VDC FAN, IS SUPPLIED BY VENDOR WITH MOUNTING CLIPS (QTY 4). IF SUPPLIED WITH "U-CLIP" TYPE MOUNTING CLIPS (REF. 9009202-00) REFER TO SECTION B-B (BB1). AND IF BOSS TYPE MOUNTING CLIPS (REF. 9009165 00) ARE SUPPLIED, REFER TO SECTION B-B (BB2).
5. TORQUE OF 16 IN-LBS REQUIRED ON SCREWS (ITEM 21) MOUNTING FLEXPRINT CABLES.
6. INSTALL BOARD ACCESS COVER (ITEM 6) WITH OFFSET LIP FITTING UNDER TOP OF SIDE WALL.
7. BOTH POWER CORDS, 120V AND 240V, ARE SUPPLIED WITH ALL OEM CPU'S. PLEASE FOLLOW WARNING INSTRUCTIONS AND ALSO DISCARD UNUSED POWER CORD.

VAR	DESCRIPTION
BA11-ZA	10.5" Z-BOX, H7202-B POWER SUPPLY, 11730-Z CARD CAGE/BACKPLANE, 12CV AND 240V POWER CORDS

CAUTION: OFF SHEETS PARTS LIST REFER TO K-PL-BA11-Z-D6P. (Z1862A)

UNLESS OTHERWISE SPECIFIED DIMENSIONS ARE IN INCHES AND THE FOLLOWING TOLERANCES APPLY (PER DEC STD 114)

THIRD ANGLE PROJECTION

DO NOT SCALE DRAWING

REMOVE BURRS AND BREAK SHARP CORNERS

MATERIAL: SEE PARTS LIST

NEXT HIGHER ASSY: B-DD-BA11-Z-0

TITLE: BA11-Z BOX ASSEMBLY

digital

DOCUMENT NUMBER: E UA BA11-Z-0 REV. B

REVISION HISTORY: REV A; REV B — ECO BA11Z TW001, R. MORIN

TW

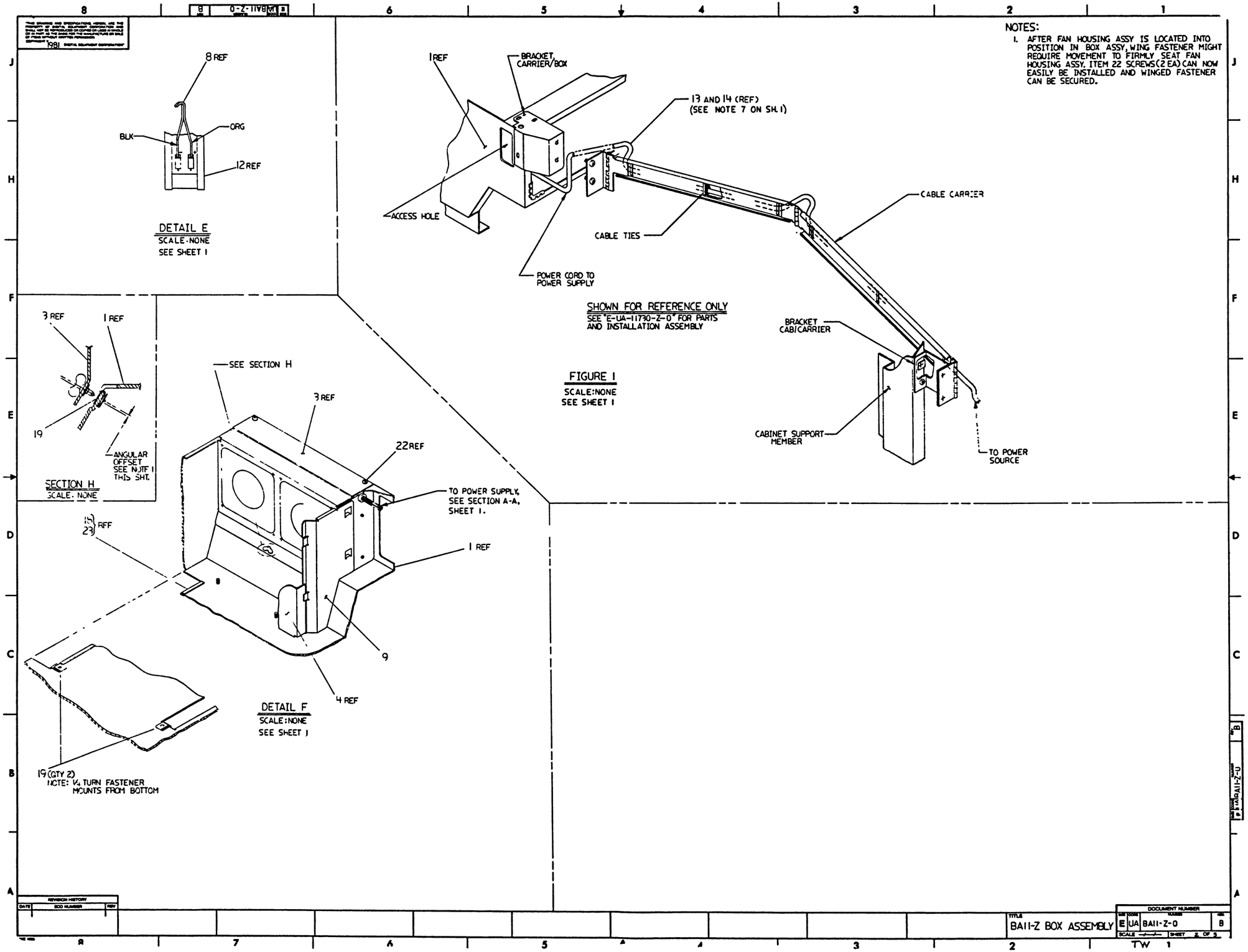

NOTES:

1. AFTER FAN HOUSING ASSY IS LOCATED INTO POSITION IN BOX ASSY, WING FASTENER MIGHT REQUIRE MOVEMENT TO FIRMLY SEAT FAN HOUSING ASSY. ITEM 22 SCREWS (2 EA) CAN NOW EASILY BE INSTALLED AND WINGED FASTENER CAN BE SECURED.

REVISION HISTORY		
DATE	ECO NUMBER	REV

TITLE: BA11-Z BOX ASSEMBLY

DOCUMENT NUMBER: E UA BA11-Z-0 B

SCALE: —/—/— SHEET 2 OF 5

TW 1

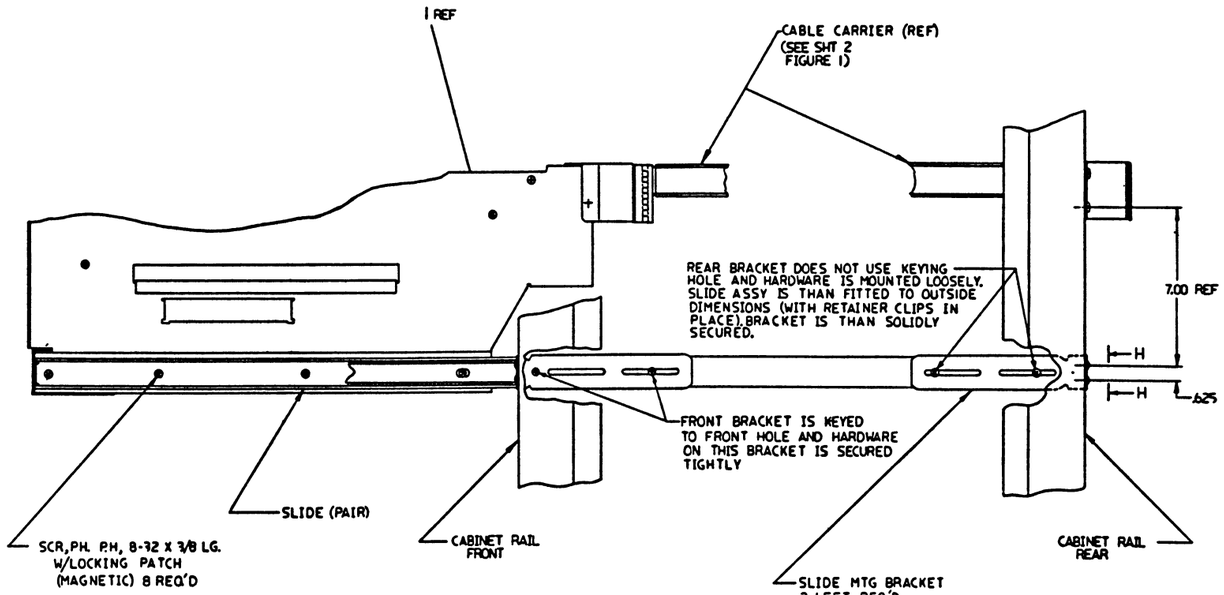

FIGURE 2
SCALE: NONE
SHOWN FOR REFERENCE ONLY
SEE "E-UA-11730-Z-0" FOR PARTS AND INSTALLATION ASSEMBLY

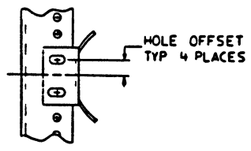

VIEW H-H
REAR VIEW-LEFT RAIL
SCALE: NONE

TITLE	DOCUMENT NUMBER	
BA11-Z BOX ASSEMBLY	E UA BA11-Z-0	B
	SCALE -/-/-	SHEET 3 OF 3

TW 1

AUTOMATED BY PRTLST.3P(44) — P A R T S L I S T — SHEET A1 OF A1

LINE	ITEM	DOCUMENT NUMBER	PART NUMBER	DESCRIPTION	QUANTITY PER VARIATION ZA	ZB
1	1	E-IA-7018115-0-0	7018115-00	Z-BOX FRAME ASSY.	1	1
2	2	B-DD-H7202-0-0	H7202-B	NEBULA POW SUP: H7200,H7211,H721	1	1
3	3	E-AD-7018081-0-0	7018081-00	FAN ASSY	1	1
4	4	E-AD-7018078-0-0	7018078-00	CARD CAGE ASSY	1	1
5	5	C-AD-7018544-0-0	7018544-00	TOP COVER ASSY.	1	1
6	6	C-AD-7018545-0-0	7018545-00	BOARD ACCESS COVER ASSY.	1	1
7	7	B-AD-7018546-0-0	7018546-00	FAN ACCESS COVER ASSY.	1	1
8	8	D-IA-7018163-0-0	7018163-00	CABLE DC TO FAN	1	1
9	9	D-MD-7424850-0-0	7424850-00	PLATE,BAFFLE END	1	1
10	10	C-IA-7425373-0-0	7425373-00	CLAMP,PS	2	2
11	11	B-MD-7425571-0-0	7425571-00	SUPPORT,WIRE	2	2
12	12		1217556-00	FAN,108CFM, 12VDC,AXIAL,4.5"DIA	1	1
13	13		1700083-22	PWR CORD,TERM. 84IN,18-3 125V 15	1	0
14	14		1700083-21	PWR CORD,TERM. 84IN,18-3 250V 6	0	1
15	15	BLANK		*** THIS ITEM IS NOT USED ***	-	-
16	16		9006565-00	NUT,KEP 10-32X 3/8 AF	4	4
17	17		9007015-00	GROMMET, RUBBER	1	1
18	18		9007035-00	GROMMET #122-37-1500	2	2
19	19		9008196-01	RECP. CLIP-ON F/1/4 TURN FASTNR	4	4
20	20		9009984-01	SCREW, SEMS, PHILLIPS PAN HD 6-	4	4
21	21		9009988-08	SCREW, SEMS,SLOTTED HEX HD 8-32	4	4
22	22		9010174-01	SCREW,PAN,PHIL,SEMS 8-32X .31 L	12	12
23	23		9009157-00	ADH,LIQ.RM.TEMP CURING COLORLESS	A/R	A/R
24	24		9009636-00	CLAMP, CABLE, FOR FLAT CABLE	4	4

REVISION HISTORY

ENG	ECO NUMBER	REV
---	INITIAL	XA
---	INITIAL	A

BASIC PART NO: 0BA11

SECTION A OF A

SECTION. VARIATION INDEX
[A] ZA,ZB
[B]
[C]
[D]
[E]
[F]

DRN: A. ROCHA — DATE: 16-NOV-81
CHK'D: R. MORIN — DATE: 16-NOV-81
DES.ENG.: R. MORIN — DATE: 16-NOV-81
RESP.ENG.: R. MORIN — DATE: 16-NOV-81
MFG.ENG.: S.CASTIGLIONE — DATE: 30-JUL-81

ASSEMBLY NUMBER: E-AD-BA11-Z-0
TOP DOCUMENT NUMBER: E-UA-11730-Z-0

D	I	G	I	T	A	L

TITLE: PARTS LIST
BA11-Z BOX ASSY

DOCUMENT NUMBER

SIZE	CODE	NUMBER	REV
K	PL	BA11-Z-DBP	A

FILE NAME: Z1862A.PLS
EDIT #: 14

"THIS DRAWING AND SPECIFICATIONS HEREIN, ARE THE PROPERTY OF DIGITAL EQUIPMENT CORPORATION AND SHALL NOT BE REPRODUCED OR COPIED OR USED IN WHOLE OR IN PART AS THE BASIS FOR THE MANUFACTURE OR SALE OF ITEMS WITHOUT WRITTEN PERMISSION.
COPYRIGHT (C) 1981. DIGITAL EQUIPMENT CORPORATION "

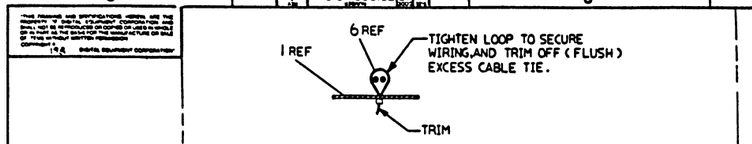

SECTION C-C
SCALE: NONE

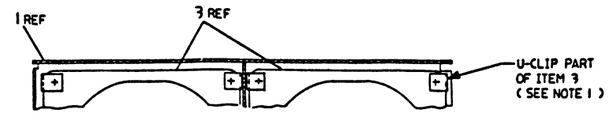

SECTION D-D
SCALE: NONE

NOTES:

1. ITEM 3, 12V. DC FAN, WILL BE SUPPLIED BY VENDOR WITH 4 (FOUR) APPROPRIATE FAN MOUNTING CLIPS. USING BOSS MOUNTING CLIP (REF 9009165-00), THERE IS NO PROBLEM. USING U-CLIP TYPE (REF 9009262-00) ON CERTAIN FANS, POSITIONING OF CLIP PER SECTION D-D ON UPPER ROW OF CORNERS IS MANDATORY FOR INSTALLATION OF THIS ASSEMBLY INTO BA11-Z BOX ASSEMBLY.
2. INCORRECT POLARITY CONNECTIONS ON DC FAN IS PROTECTED BY THE FAN. FAN WILL NOT OPERATE IF IMPROPERLY CONNECTED.
3. TO PROPERLY INSTALL ITEM 11 ONTO ITEM 10, USE INSTALLATION TOOL 82-0-14719-11 (SOUTHCO) OR EQUIVALENT.
4. ITEM 12 RUBBER U CHANNEL IS TO BE CUT TO 1.25 ±.06 INCH LONG. THIS ITEM IS INSERTED UNTO ITEM 2 AND BUTTED AGAINST SENSOR BOARD.

FRONT VIEW

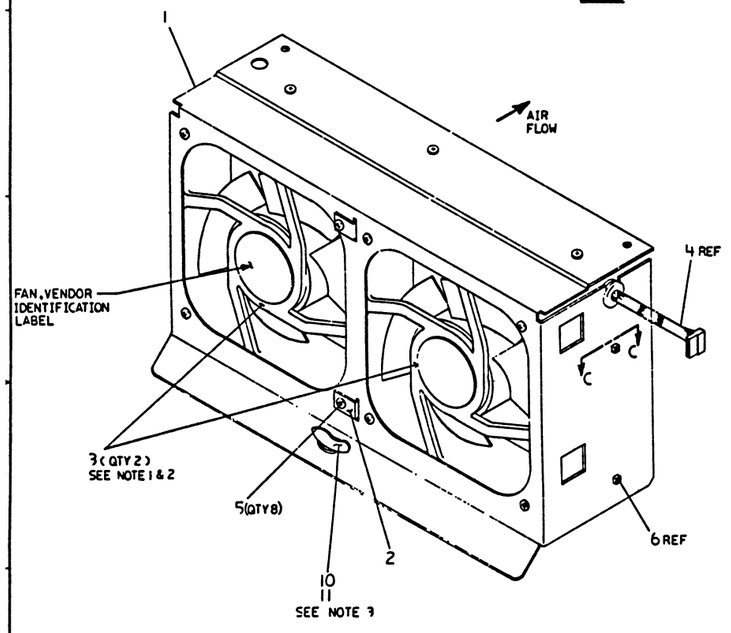

REAR VIEW

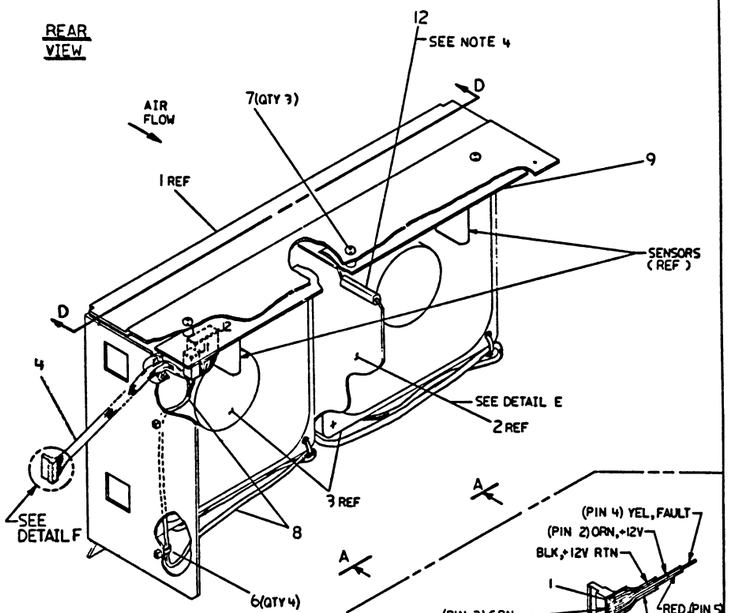

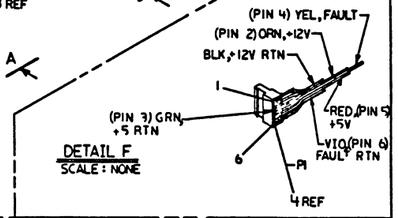

DETAIL F
SCALE: NONE

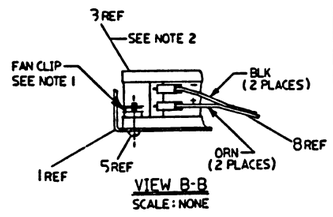

VIEW B-B
SCALE: NONE

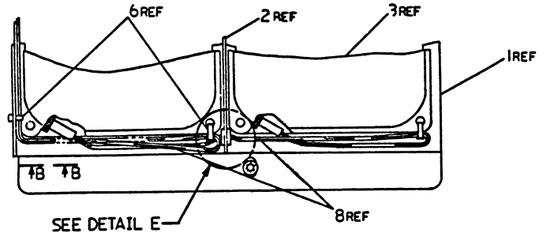

VIEW A-A
SCALE: NONE

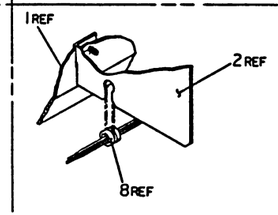

DETAIL E
SCALE: NONE
(SHOWN WITH FANS, ITEM 3, REMOVED)

NOTE: FOR PARTS LIST REFER TO K-PL-7018081-0-DBP.

MATERIAL	SEE PARTS LIST
FINISH	
TITLE	MODULE FAN ASSY
DOCUMENT NUMBER	E AD 7018081-0-0 A
	E-UA-BAII-Z-0

DO NOT SCALE DRAWING
REMOVE BURRS AND BREAK SHARP CORNERS
UNLESS OTHERWISE SPECIFIED DIMENSIONS ARE IN INCHES AND THE FOLLOWING TOLERANCES APPLY (PER DEC STD 11A)

AUTOMATED BY FRTLST.3P(44) — P A R T S L I S T — SHEET A1 OF A1

LINE	ITEM	DOCUMENT NUMBER	PART NUMBER	DESCRIPTION	QUANTITY PER VARIATION 00
1	1	D-MD-7424831-0-0	7424831-00	HOUSING,FAN	1
2	2	C-MD-7424849-0-0	7424849-00	BAFFLE,FAN	1
3	3		1217556-00	FAN,103CFM, 12VDC,AXIAL,4.5"DIA	2
4	4	D-IA-7018162-0-0	7018162-0M	SENSOR PWR CABLE	1
5	5		9059984-01	SCREW, SEMS, PHILLIPS PAN HD 6-	8
6	6		9007031-00	TIE,CABLE BUNDL,DIA 0- 3/4"=101	4
7	7		9009643-02	SCREW,PAN,SLOT,SEMS 4-40X .250L	3
8	8	D-IA-7018161-0-0	7018161-00	DC HARNESS ASSY	1
9	9	D-AD-5414340-0-0	5414340-00	AIR FLOW SENSOR	1
10	10		9000026-05	FASTNR, 1/4 TURN,WING HD	1
11	11		9010308-00	RETAINER,PUSH-ON SS/PAS	1
12	12	SEE NOTE	9009533-00	CHANNEL"U"EXTRUDED RUBBER	1

13 NOTE: CUT LENGTH OF ITEM 12 TO BE 1.25+\-.06 INCH

REVISION HISTORY			BASIC PART NO: 7018081									
ENG	ECO NUMBER	REV	SECTION A OF A	DRN: P. TOUSIGNANT	DATE: 28-JUL-81		D	I	G	I	T	A	L
---	INITIAL	A	SECTION. VARIATION INDEX [A] 00	CHK'D: A. ROCHA	DATE: 28-JUL-81	TITLE	PARTS LIST						
			[B]	DES.ENG.: R. MORIN	DATE: 28-JUL-81	MODULE FAN ASSY							
			[C]	RESP.ENG.: R. MORIN	DATE: 28-JUL-81	DOCUMENT NUMBER							
			[D]			SIZE	CODE	NUMBER				REV	
			[E]	MFG.ENG.: E. PARIS	DATE: 28-JUL-81	K	PL	7018081-0-DBP				A	
			[F]	ASSEMBLY NUMBER: E-AD-7018081-0-0	TOP DOCUMENT NUMBER: E-UA-8A11-Z-0	FILE NAME: Z1848A.PLS						EDIT #: 14	

"THIS DRAWING AND SPECIFICATIONS HEREIN, ARE THE PROPERTY OF DIGITAL EQUIPMENT CORPORATION AND SHALL NOT BE REPRODUCED OR COPIED OR USED IN WHOLE OR IN PART AS THE BASIS FOR THE MANUFACTURE OR SALE OF ITEMS WITHOUT WRITTEN PERMISSION.
COPYRIGHT (C) 1981. DIGITAL EQUIPMENT CORPORATION "

"THIS DRAWING AND SPECIFICATIONS, HEREIN, ARE THE PROPERTY OF DIGITAL EQUIPMENT CORPORATION AND SHALL NOT BE REPRODUCED OR COPIED OR USED IN WHOLE OR IN PART AS THE BASIS FOR THE MANUFACTURE OR SALE OF ITEMS WITHOUT WRITTEN PERMISSION.
COPYRIGHT © 1980 DIGITAL EQUIPMENT CORPORATION"

SIZE D CODE IA NUMBER 7018161-0-0 REV A

WIRE TABLE

ITEM NO.	DESCIPTION AWG	DESCIPTION COLOR	FROM POINT	FROM CONNECTION	FROM WITH	TO POINT	TO CONNECTION	TO WITH	LENGTH
4	22	ORG.	1	P1	2	6	P3	2	13 IN.±1 IN.
						4	P5-1	—	15 IN±1 IN.
3	22	BLK.	2	P2	2	3	P5-2	—	15 IN±1 IN.
						5	P4	2	13 IN ±1 IN.

NOTES:
1. ATTACH CABLE TIES(ITEM 8) APPROX. EVERY 3 IN. AS SHOWN, AND AT EVERY BREAKOUT POINT.
2. ALL WIRE ENDS TO BE STRIPPED. EXCEPT FOR POINTS 3 AND 4.

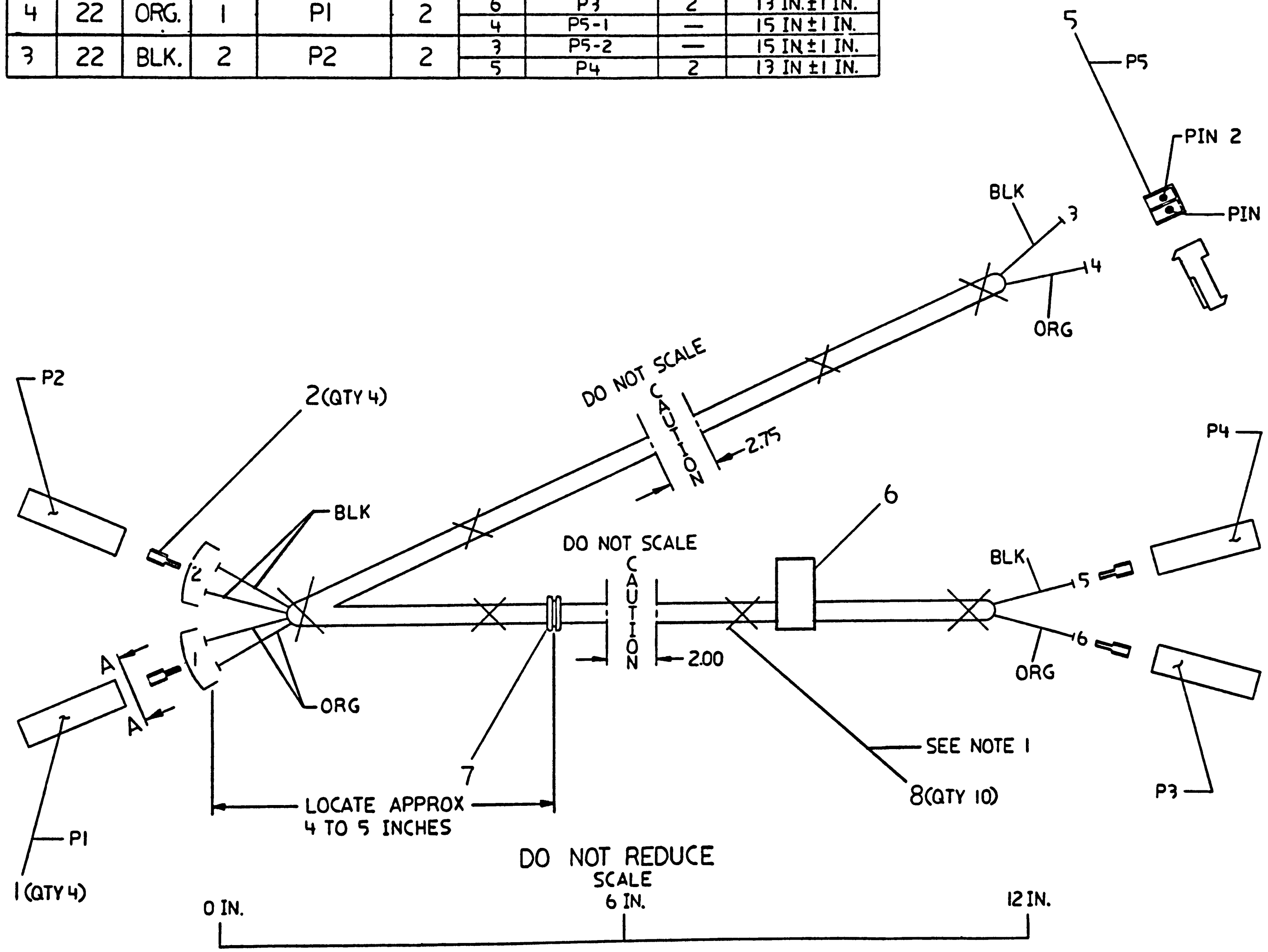

DETAIL A
4 PLACES
WIRING SIDE

SEE OFF SHEET PARTS LIST
K-PL-7018161-0-DBP

REVISION HISTORY		
DATE	ECO NUMBER	REV
22 MAY 81	RELEASED AT REV A FROM REV X&C	A

UNLESS OTHERWISE SPECIFIED DIMENSIONS ARE IN INCHES AND THE FOLLOWING TOLERANCES APPLY (PER DEC STD 114)

INCHES TOLERANCES: .X = ±.1, .XX = ±.02, .XXX = ±.005
ANGLES ±0°30'

THIRD ANGLE PROJECTION
DO NOT SCALE DRAWING
REMOVE BURRS AND BREAK SHARP CORNERS
MATERIAL: SEE PARTS LIST
FINISH: —

DRN	Paul Tousignant	1/8/80
CHK'D	J.F. Sullivan	9 FEB 81
DES. ENG.	R. Morin	4 AUG 81
RESP. ENG.	R. Morin	4 AUG 81
MFG. ENG.	S. Castaglia	13 OCT 81

NEXT HIGHER DOC. E-AD-7018081-0-0

TITLE: DC HARNESS ASSY
digital

DOCUMENT NUMBER: SIZE D CODE IA NUMBER 7018161-0-0 REV A
SCALE 1/1 SHEET 1 OF 1

TW

AUTOMATED BY FRTLST.3P(44) — P A R T S L I S T — SHEET A1 OF A1

LINE	ITEM	DOCUMENT NUMBER	PART NUMBER	DESCRIPTION	QUANTITY PER VARIATION 00
1	1		1210820-01	SOCKET HOUSING	4
2	2		1210820-03	CONN TERMINAL,LOOSE	4
3	3	SEE NOTE 1	9107736-00	WIRE,STRND,22AWG,XLPVC UL1430 (	28
4	4	SEE NOTE 2	9107796-33	WIRE,STRND,22AWG,XLPVC UL1430 (	28
5	5		1213296-02	CONN .100 2SKT STRAIGHT	1
6	6		9009555-01	LABEL, POWER SUPPLY, 2-7 8" LG X	1
7	7		9007013-00	GROMMET, RUBBER	1
8	8		9007031-00	TIE,CABLE BUNDL.DIA 0- 3/4"=101	10

9 NOTE: 1.ITEM 3 REQUIRES A 13 INCH AND A 15 INCH LENGTH.
10 NOTE: 2.ITEM 4 REQUIRES A 13 INCH AND A 15 INCH LENGTH.

REVISION HISTORY		
ENG	ECO NUMBER	REV
---	INITIAL	A

BASIC PART NO: 7018161
SECTION A OF A
SECTION. VARIATION INDEX
[A] 00
[B]
[C]
[D]
[E]
[F]

DRN: P. TOUSIGNANT — DATE: 23-JUL-81
CHK'D: A. ROCHA — DATE: 23-JUL-81
DES.ENG.: R. MORIN — DATE: 23-JUL-81
RESP.ENG.: R. MORIN — DATE: 23-JUL-81
MFG.ENG.: S. CASTIGLIONE — DATE: 23-JUL-81

ASSEMBLY NUMBER: D-IA-7018161-0-0
TOP DOCUMENT NUMBER: E-AD-7018081-0-0

D I G I T A L

TITLE: PARTS LIST
DC HARNESSS ASSY

DOCUMENT NUMBER

SIZE	CODE	NUMBER	REV
K	PL	7018161-0-DBP	A

FILE NAME: 21851A.PLS
EDIT #: 15

"THIS DRAWING AND SPECIFICATIONS HEREIN, ARE THE PROPERTY OF DIGITAL EQUIPMENT CORPORATION AND SHALL NOT BE REPRODUCED OR COPIED OR USED IN WHOLE OR IN PART AS THE BASIS FOR THE MANUFACTURE OR SALE OF ITEMS WITHOUT WRITTEN PERMISSION.
COPYRIGHT (C) 1981. DIGITAL EQUIPMENT CORPORATION "

"THIS DRAWING AND SPECIFICATIONS, HEREIN, ARE THE PROPERTY OF DIGITAL EQUIPMENT CORPORATION AND SHALL NOT BE REPRODUCED OR COPIED OR USED IN WHOLE OR IN PART AS THE BASIS FOR THE MANUFACTURE OR SALE OF ITEMS WITHOUT WRITTEN PERMISSION
COPYRIGHT © 1981 DIGITAL EQUIPMENT CORPORATION"

SIZE	CODE	NUMBER	REV
D	IA	7018162-0-0	A

WIRE TABLE

ITEM NO.	DESCRIPTION AWG	DESCRIPTION COLOR	FROM CONN	FROM WITH	TO CONN	TO WITH	REMARKS
3	22	BLACK	P1 - 1	—	P2 - 1	—	+12V RTN
5	22	ORANGE	P1 - 2	—	P2 - 2	—	+12 V
6	22	YELLOW	P1 - 4	—	P2 - 4	—	FAULT
4	22	RED	P1 - 5	—	P2 - 5	—	+5V
7	22	VIOLET	P1 - 6	—	P2 - 6	—	FAULT RTN
10	22	GREEN	P1 - 3	—	P2 - 3	—	+5V RTN

LEGEND

NUMBER	DIM.X VARIATION	DIM Y(PRECUT)REF
7018162-0M	11. IN ±.5 IN	11.50 IN. ±.5 IN.

NOTES:

1. ATTACH CABLE TIES(ITEM 8) APPROX. EVERY 3 IN. AS SHOWN.
2. WIRES NEED NOT HAVE ANY INSULATION REMOVED.

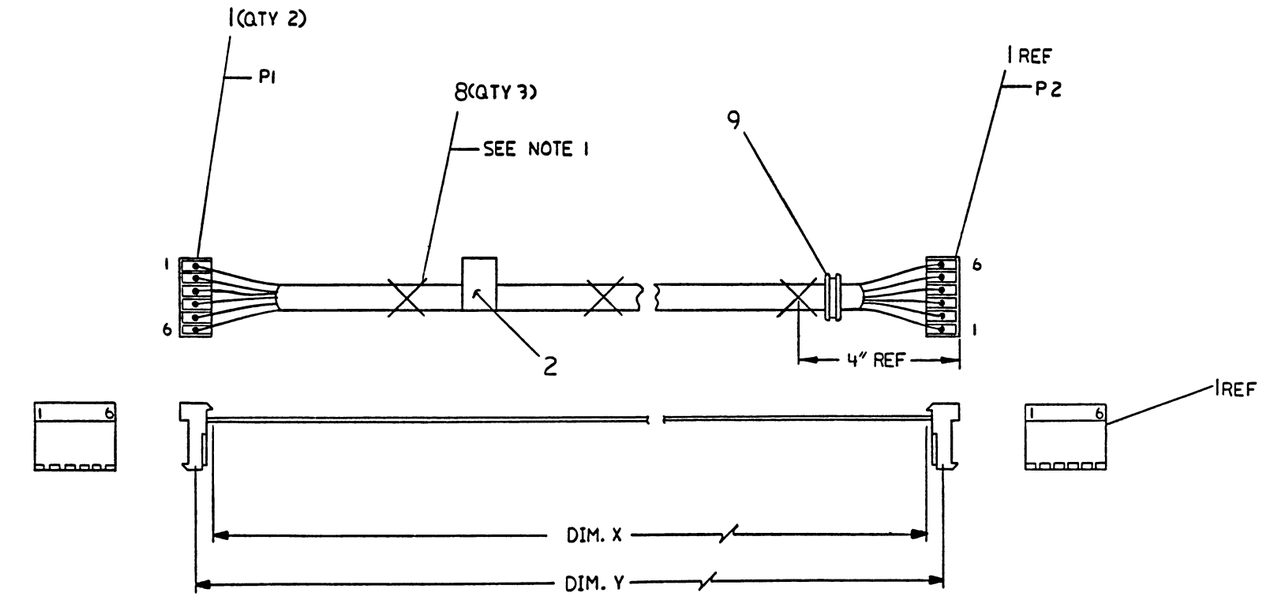

SEE OFF SHEET PARTS LIST
K-PL- 7018162-0-DBP

DESCRIPTION	DRAWING NO	PART NO.	ITEM NO

UNLESS OTHERWISE SPECIFIED DIMENSIONS ARE IN INCHES AND THE FOLLOWING TOLERANCES APPLY (PER DEC STD 114)

INCHES TOLERANCES	ANGLES ±0°30'	APPLICABLE DIMENSION RANGE (CHECK ONE)	DIMENSION RANGE IN INCHES: OVER 0 TO 0.2	OVER 0.2 TO 1.2	OVER 1.2 TO 4.0	OVER 4.0 TO 12.0	OVER 12.0 TO 40.0	OVER 40.0 TO 60.0
.X = ± 1	SURFACE QUALITY		± .02		± .03	± .05	± .10	
.XX = ± .02			± .004	± .008	± .012	± .016	± .024	± .04
.XXX = ± .005	MICROINCHES							

QUANTITY & VARIATION

THIRD ANGLE PROJECTION

DO NOT SCALE DRAWING

REMOVE BURRS AND BREAK SHARP CORNERS

MATERIAL: SEE PARTS LIST

FINISH

		DATE
DRN	R.C. Tousignant	1-15-81
CHK'D	R.P. Morin	4 AUG 81
DES. ENG.	R.P. Morin	4 AUG 81
RESP. ENG.	R.P. Morin	4 AUG 81
MFG. ENG.	S. Castyline	13 OCT 81
NEXT HIGHER DOC.	E-AD-7018081-0-0	

TITLE: CABLE, SENSOR POWER

digital

DOCUMENT NUMBER

SIZE	CODE	NUMBER	REV.
D	IA	7018162-0-0	A

SCALE 1/1 SHEET OF

TW

REVISION HISTORY

DATE	ECO NUMBER	REV
	Released at Rev A Fairy Rev X85 Plugged 28 Aug 81	A

DRD 1000

AUTOMATED BY PRTLST.3P(44) — P A R T S L I S T — SHEET A1 OF A1

LINE	ITEM	DOCUMENT NUMBER	PART NUMBER	DESCRIPTION	QUANTITY PER VARIATION OM
1	1		1218296-03	CONN .100 6SKT STRAIGHT	2
2	2		9009255-01	LABEL, POWER SUPPL., 2-7/8" LG X	1
3	3	SEE NOTE	9107796-00	WIRE,STRND,22AWG,XLPVC UL1430 (	12
4	4	SEE NOTE	9107796-22	WIRE,STRND,22AWG,XLPVC UL1430 (	12
5	5	SEE NOTE	9107796-33	WIRE,STRND,22AWG,XLPVC UL1430 (	12
6	6	SEE NOTE	9107795-44	WIRE,STRND,22AWG,XLPVC UL1430 (	12
7	7	SEE NOTE	9107796-77	WIRE,STRND,22AWG,XLPVC UL1430 (	12
8	8		9007031-00	TIE,CABLE BUNDL.DIA 0- 3/4"=101	3
9	9		9007017-00	GROMMET, RUBBER	1
10	10	SEE NOTE	9107796-55	WIRE,STRND,22AWG,XLPVC UL1430 (	12

11 NOTE: ITEMS 3,4,5,6,7 AND 10 ARE IN INCHES LONG.

REVISION HISTORY			BASIC PART NO: 7018162									
ENG	ECO NUMBER	REV	SECTION A OF A	DRN: P. TOUSIGNANT	DATE: 23-JUL-81		D	I	G	I	T	A	L
---	INITIAL	A	SECTION. VARIATION INDEX [A] OM	CHK'D: A. ROCHA	DATE: 23-JUL-81	TITLE PARTS LIST							
			[B]	DES.ENG.: R. MORIN	DATE: 23-JUL-81	SENSOR POWER CABLE							
			[C]	RESP.ENG.: R. MORIN	DATE: 23-JUL-81	DOCUMENT NUMBER							
			[D]			SIZE	CODE	NUMBER			REV		
			[E]	MFG.ENG.: S. CASTIGLIONE	DATE: 23-JUL-81	K	PL	7018162-0-DBP			A		
			[F]	ASSEMBLY NUMBER: D-IA-7018162-0-0	TOP DOCUMENT NUMBER: E-AD-7018081-0-0	FILE NAME: Z1852A.PLS					EDIT # 13		

"THIS DRAWING AND SPECIFICATIONS HEREIN, ARE THE PROPERTY OF DIGITAL EQUIPMENT CORPORATION AND SHALL NOT BE REPRODUCED OR COPIED OR USED IN WHOLE OR IN PART AS THE BASIS FOR THE MANUFACTURE OR SALE OF ITEMS WITHOUT WRITTEN PERMISSION.
COPYRIGHT (C) 1981. DIGITAL EQUIPMENT CORPORATION "

SIZE	CODE	NUMBER	REV.
B	DD	5414340-0	A

DRAWING NO.	NO. OF SHTS.	PART NO.	DESCRIPTION	REVISIONS
B-DD-5414340-0	1		AIR FLOW SENSOR	A
D-UA-5414340-0-0	1		AIR FLOW SENSOR	A
D-MD-5014339-0-0	3		DRILL AND ETCH DRAWING	A
D-EG-5014339-0-0	2		ETCH CUT DRAWING	A
D CS 5414340-0-1	1		AIR FLOW SENSOR	A
K-PL-5414340-0-DBP	1		AIR FLOW SENSOR	A
		5014339	ETCHED BOARD	D
K-PC-5414340-0-DBC			P C DESIGN DATA BASE	D
A-SP-3700646-0-0	6	3700646-01	PKG MODULE (5413340) 54PACK	A
A-SP-5414340-0-2	17		AIR FLOW SENSOR SPEC	A

NOTES:

REVISIONS	REV.	CHG NO.	DATE

"THIS DRAWING AND SPECIFICATIONS, HEREIN, ARE THE PROPERTY OF DIGITAL EQUIPMENT CORPORATION AND SHALL NOT BE REPRODUCED OR COPIED OR USED IN WHOLE OR IN PART AS THE BASIS FOR THE MANUFACTURE OR SALE OF ITEMS WITHOUT WRITTEN PERMISSION.

COPYRIGHT© 1981 DIGITAL EQUIPMENT CORPORATION

digital

USED ON OPTION/MODEL	
BAII-Z	

DRN.	Ferguson	8-10-81
CHK'D	Ferguson	9-10-81
ENG.	[illegible]	9-17-81
PROD.	W. P. Laycock	9/18/81

TITLE: AIR FLOW SENSOR

SIZE	CODE	NUMBER	REV.
B	DD	5414340-0	A

SHEET 1 OF 1

TW

DRB 126

THIS DRAWING AND SPECIFICATIONS, HEREIN, ARE THE PROPERTY OF DIGITAL EQUIPMENT CORPORATION AND SHALL NOT BE REPRODUCED OR COPIED OR USED IN WHOLE OR IN PART AS THE BASIS FOR THE MANUFACTURE OR SALE OF ITEMS WITHOUT WRITTEN PERMISSION.
COPYRIGHT © 1981 DIGITAL EQUIPMENT CORPORATION

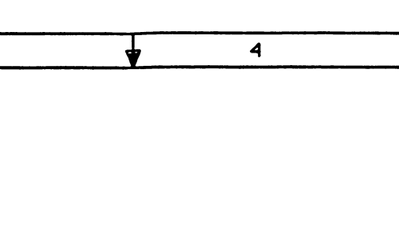

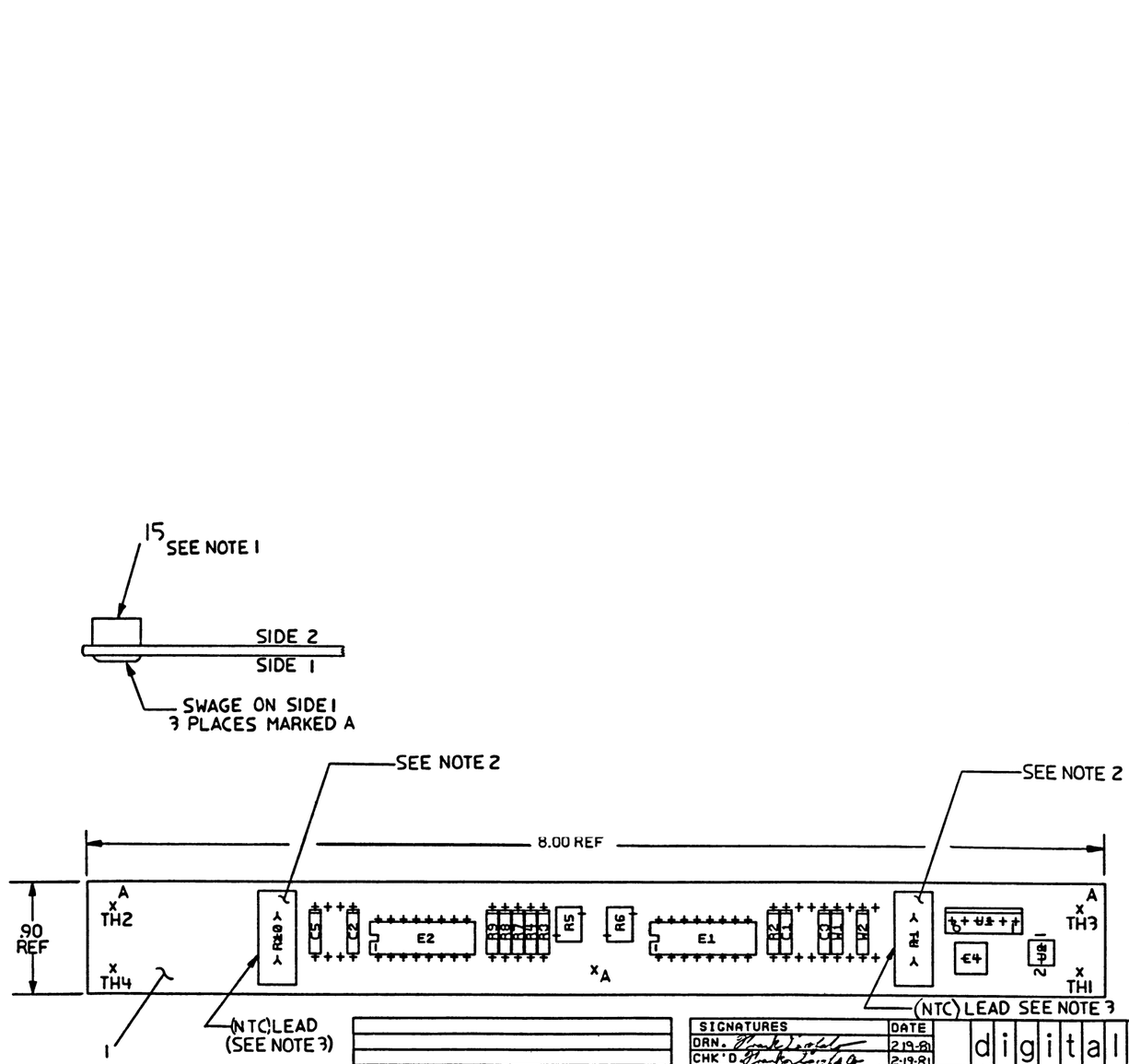

NOTES: 1. INSTALL ITEM 15 FROM SIDE 2 AFTER WAIVE SOLDER & AFTER BOARD IS CUT TO FINISHED BOARD SIZE.
2. R1 & R10 MUST BE RAISED .125" TO .150" OFF PC. BOARD.
3. NOTE ORIENTATION OF R1 AND R10 (ITEM 10)

STEP & REPEAT	↑ Y AXIS	STEP	TIMES
	→ X AXIS	STEP	TIMES

CHK	CHANGE NO.	REV

ETCH REV. D

SIGNATURES	DATE
DRN.	2-19-81
CHK'D	2-19-81
MECH. ENG.	9-17-81
PROJ. ENG	9-17-81
PROD. ENG	9-18-81
SCALE 2/1	
SHT. OF	
NEXT HIGHER ASSY. B-DD-5414340-0	

digital

TITLE AIR FLOW SENSOR

SIZE	CODE	NUMBER	REV
D	UA	5414340-0-0	A

1 WO# 170273

AUTOMATED BY PRTLST.3P(44) — P A R T S L I S T — SHEET A1 OF A1

LINE	ITEM	DOCUMENT NUMBER	PART NUMBER	DESCRIPTION	QTY PER VARIATION 00	REFERENCE DESIGNATOR
1	1		5014339-03	DRILL + ETCH BD.	1	
2	2		1018000-01	15 MFD 25V +50-10 AL EL	1	C4
3	3		1013466-22	.1 MFD 50V +80-20% Z5U CER	4	C1,C2,C3,C5
4	4		1302391-00	20.0 K .25 W 5.0 % CC	2	R3,R8
5	5		1315096-00	1.87 K .25 W 1.0 % RN55D-F10	1	R7
6	6		1313841-00	23.20 K .25 W 1.0 % RN55D-F10	2	R2,R9
7	7		1313843-00	107.0 K .25 W 1.0 % RN55D-F10	1	R4
8	8		1317202-00	9.739K 7.0 % NTC THERM	1	R5
9	9		1317202-02	119.128K 7.0 % NTC THERM	1	R6
10	10		1318550-02	12.55 10.0 % NTC THERM	2	R1,R10
11	11		1218243-03	HEADER.100 6PIN STRAIGHT	1	J1
12	12		1218243-02	HEADER.100 2PIN STRAIGHT	1	J2
13	13		1918102-00	9903 AIRFLOW SENSOR	2	E1,E2
14	14		9009185-00	JUMPER, WIRE, INSULATED, BLACK B	2	W1,W2
15	15		9010292-00	STANDOFF,THREAD 4-40X .137	3	
16	16	A-SP-3700646-0-0	3700646-01	PKG. MODULE 5414340 (54 PACK)	1	

REVISION HISTORY

ENG	ECO NUMBER	REV
	INITIAL	A

BASIC PART NO: 5414340

SECTION A OF A

SECTION VARIATION INDEX

[A]	00
[B]	
[C]	
[D]	
[E]	
[H]	
[J]	
[K]	
[R]	
[N]	

DRN:	J.FERGUSON	DATE: 30-JAN-91
CHK'D:	F.GAROFALO	DATE: 30-JAN-91
DES.ENG:	D.DRINKWATER	DATE: 30-JAN-91
RESP.ENG.:	D.DRINKWATER	DATE: 30-JAN-91
MFG.ENG.:	W. WYCKOFF	DATE: 9-10-91
ASSEMBLY NUMBER: D-UA-5414340-0-0	TOP DOCUMENT NUMBER: B-DD-5414340-0-0	

DIGITAL

TITLE: PARTS LIST

AIR FLOW SENSOR

DOCUMENT NUMBER

SIZE	CODE	NUMBER	REV
K	FL	5414340-0-DSP	A

FILE NAME: SENSOR.PLS — EDIT: 9

"THIS DRAWING AND SPECIFICATIONS HEREIN, ARE THE PROPERTY OF DIGITAL EQUIPMENT CORPORATION AND SHALL NOT BE REPRODUCED OR COPIED OR USED IN WHOLE OR IN PART AS THE BASIS FOR THE MANUFACTURE OR SALE OF ITEMS WITHOUT WRITTEN PERMISSION.
COPYRIGHT (C) 1991. DIGITAL EQUIPMENT CORPORATION"

NOTE: Recreated from poor quality original. May have errors.

SIZE	CODE	NUMBER	REV.
B	DD	7018080-0-0	B

DRAWING NO.	NO. OF SHTS.	PART NO.	DESCRIPTION	REVISIONS
A-WT-7018080-0-2	1		AWT REVISION STATUS	A A
K-WL-7018080-0-DBW			DESIGN DATA BASE TAPE	A A
K-WL-7018080-0-1	1		WIRELIST (730Z)	A A
		5014598-00	ETCH BOARD	C D
K-PL-7018080-0-DBP	1		11730-Z BACKPLANE ASSY	A A
D-AD-7018080-0-0	1		11730 Z BACKPLANE ASSY	A A
B-DD-5414599-0-0	1		730Z BACKPLANE MODULE	A B

NOTES:

REVISIONS		
DATE	CHG NO.	REV.
8-82	TW001	B

"THIS DRAWING AND SPECIFICATIONS, HEREIN, ARE THE PROPERTY OF DIGITAL EQUIPMENT CORPORATION AND SHALL NOT BE REPRODUCED OR COPIED OR USED IN WHOLE OR IN PART AS THE BASIS FOR THE MANUFACTURE OR SALE OF ITEMS WITHOUT WRITTEN PERMISSION.

COPYRIGHT© DIGITAL EQUIPMENT CORPORATION

digital

USED ON OPTION/MODEL			

DRN. R. Tousignant	27 July 81	
CHK'D R B Morin	2 DEC 81	
ENG R B Morin	2 DEC 81	
PROD. Jack Grieve	2 Dec 81	

TITLE: 11730 BACKPLANE

SIZE	CODE	NUMBER	REV.
B	DD	7018080-0-0	B

SHEET 1 OF 1

DRB 126

TW

"THIS DRAWING AND SPECIFICATIONS, HEREIN, ARE THE PROPERTY OF DIGITAL EQUIPMENT CORPORATION AND SHALL NOT BE REPRODUCED OR COPIED OR USED IN WHOLE OR IN PART AS THE BASIS FOR THE MANUFACTURE OR SALE OF ITEMS WITHOUT WRITTEN PERMISSION.
COPYRIGHT © 1980, DIGITAL EQUIPMENT CORPORATION"

PIN NO'S	FUNCTION	PIN NO'S	FUNCTION
1-2-3-4-5-7-9	+5B	18	TOY RET.
6	+5	21-22	-15
8	-5	23-24	+15
10	LTC	26	TOY+5
11-13-14	+12	28	SIG. RET.
12	BOOT EN.	30	DC LO
15-16	-12	32	AC LO
17-19-20	±15V RET	25-27-29-31,33 THRU 40	POW. RET.

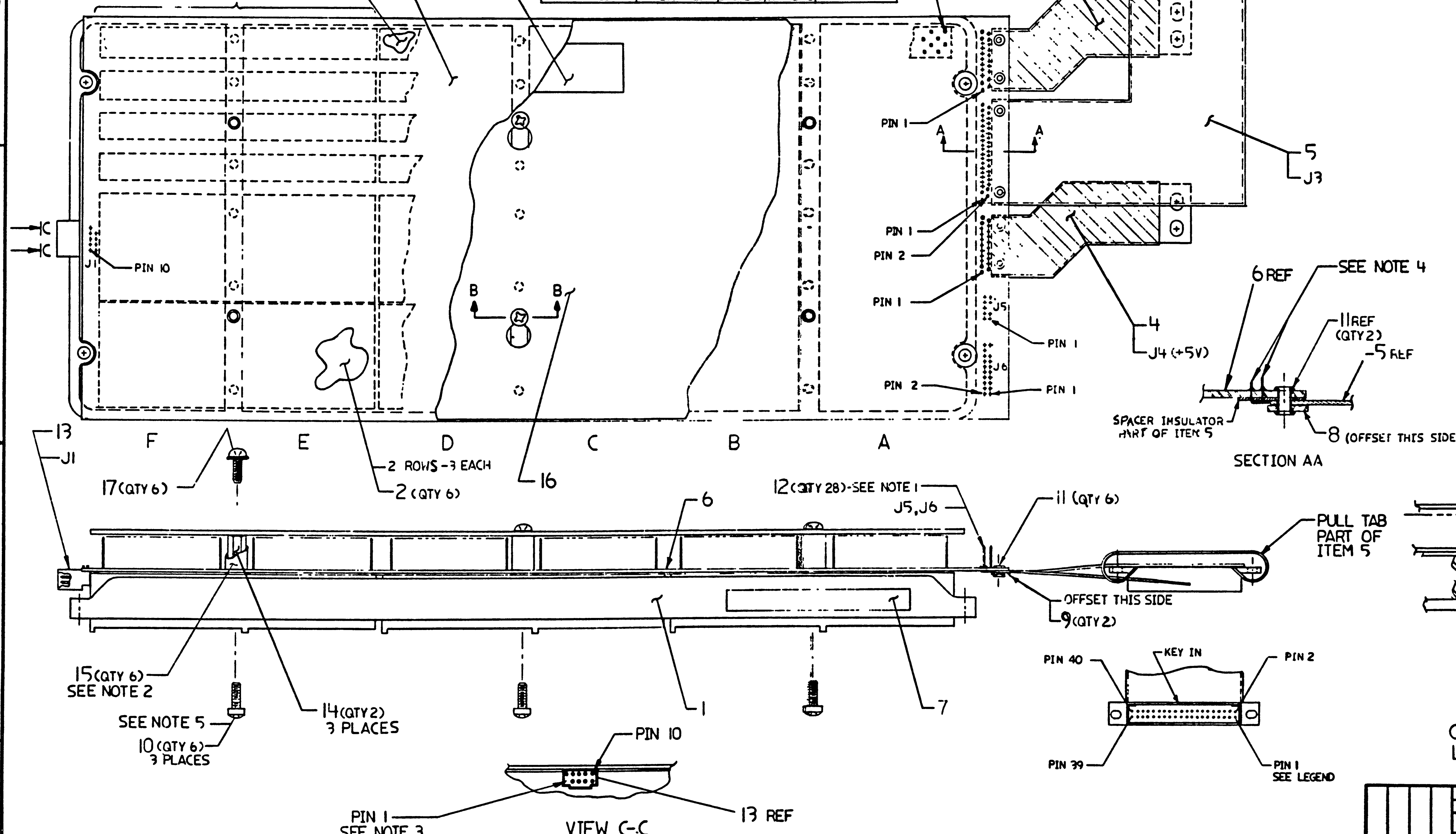

NOTES:

1. STAKE PINS, ITEM 12, ARE INSERTED BEFORE BLOCKS ARE MOUNTED. ALSO, PINS ARE TO BE PROTECTED FROM SOLDERING.
2. PROTECTIVE SLEEVE, ITEM 15 (1/2 ± 1/16 LONG) REQUIRED ON ALL STANDOFFS. ITEM 14; (QTY 6)
3. PIN 1 OF ITEM 13 MUST BE REMOVED BEFORE BEING INSTALLED. J1 IS MOUNTED ON SIDE 1 OF THE PC BOARD (BLOCKSIDE).
4. ALL PINS OF ITEM 5 (POWER CABLE) AND ITEM 4 (FLEX CABLE) SHOULD NOT EXTEND MORE THAN .060 INCH MAXIMUM ABOVE SURFACE OF THE BOARD. CUT PINS TO MAXIMUM LENGH IF NECESSARY.
5. USE ITEM 10 (24 EACH) TO ASSEMBLE FOR WAVE SOLDERING AND REPLACE ITEM 10 IN 6 PLACES WITH ITEM 19 WHEREVER STANDOFF (ITEM 14) IS TO BE USED.

CAUTION: SEE OFF SHEET PARTS LIST K-PL-7018080-0-DBP (Z0715)

REVISIONS		
REV.	CHANGE NO.	CHK
A	Release with rev A	

UNLESS OTHERWISE SPECIFIED DIMENSIONS ARE IN INCHES

THIRD ANGLE PROJECTION — REMOVE BURRS AND BREAK SHARP CORNERS — DO NOT SCALE DWG

MATERIAL: SEE PARTS LIST

FINISH: —

DRN.	R. MORIN 4 JUN 81
CHK'D	4 AUG 91
ENG.	4 AUG 81
PROJ. ENG.	4 AUG 91
PROD.	2 DEC 81
NEXT HIGHER ASSY.	B-DD-7018078-0-0
SCALE	1:1
SHEET	1 OF 1

FIRST USED ON: 11730-Z

digital

TITLE: 11730-Z BACKPLANE ASSEMBLY

SIZE	CODE	NUMBER	REV
D	AD	7018080-0-0	A

2 TW

AUTOMATED BY PRTLST.3P(44) — P A R T S L I S T — SHEET A1 OF A1

LINE	ITEM	DOCUMENT NUMBER	PART NUMBER	DESCRIPTION	QUANTITY PER VARIATION 00
1	1		1217096-02	FRAME,LOGIC,12 SLOT	1
2	2		1210258-01	CONN,CARD 288PIN SLOTTED OPEN EN	6
3	3		1211425-00	CONN,CARD 72PIN SLOTTED DOUBLE	12
4	4		1700239-00	CIRCUIT,FLEXIBLE POWER CABLE	2
5	5		1700238-00	CIRCUIT,FLEXIBLE,SIGNAL	1
6	6	E-MD-5014598-0-0	5014598-00	DRILL AND ETCH BD.	1
7	7	A-DC-7411881-0-0	7411881-01	DECAL	1
8	8	B-MD-7424779-0-0	7424779-00	STRAIN RELIEF	1
9	9	B-MD-7424779-0-0	7424779-01	STRAIN RELIEF	2
10	10		9006120-06	SCREW, POZIDRIVE FILLISTER HD SW	18
11	11		9000024-01	EYELET,ROLL FLANGE .1210DX .192	6
12	12		9009149-00	PIN, STAKING, P.C. BOARD, .025 X	28
13	13		1218414-01	HEADER.100 10PIN RT ANGLE	1
14	14	C-MD-7425372-0-0	7425372-00	SPACER	6
15	15	SEE NOTE	9107252-09	TUBING,SHRINK 3/8 DIA.EXP UL	3
16	16	D-MD-7425344-0-0	7425344-00	COVER,PROTECTIVE	1
17	17		9009545-01	SCREW,PAN,PHIL,SEMS 8-32X .50 L	6
18	18		3618538-01	LABEL,CAUTION	1
19	19		9007641-06	SCREW, PHILLIPS FILLISTER HEAD 8	6
20	20		9105740-44	WIRE(WRAP)30AWG UL1423	A/R
21	21	K-WL-7018080-0-1		WIRELIST (730Z)	REF
22	22	A-WT-7018080-0-2		AWT REVISION STATUS	REF
23	23	K-WL-7018080-0-DBW		DATA BASE TAPE	REF
24	24		9905016-07	CARTON,DIE CUT W/FOAM,B	A/R

25 NOTE: ITEM 15 IS IN INCHES.

REVISION HISTORY			BASIC PART NO: 7018080										
ENG	ECO NUMBER	REV	SECTION A OF A	DRN: R.J. RILEY	DATE: 26-AUG-81		D	I	G	I	T	A	L
---	INITIAL	A	SECTION. VARIATION INDEX [A] 00	CHK'D: R.J. RILEY	DATE: 26-AUG-81	TITLE	PARTS LIST						
			[B]	DES.ENG.: R. MORIN	DATE: 26-AUG-81	11730-Z BACKPLANE ASSEMBLY							
			[C]	RESP.ENG.: R. MORIN	DATE: 26-AUG-81	DOCUMENT NUMBER							
			[D]			SIZE	CODE	NUMBER				REV	
			[E]	MFG.ENG.: K. WALSH	DATE: 26-AUG-81	K	PL	7018080-0-DBP				A	
			[F]	ASSEMBLY NUMBER: D-AD-7018080-0-0	TOP DOCUMENT NUMBER: E-AD-7018078-0-0			FILE NAME: Z0715A.PLS				EDIT # 25	

"THIS DRAWING AND SPECIFICATIONS HEREIN, ARE THE PROPERTY OF DIGITAL EQUIPMENT CORPORATION AND SHALL NOT BE REPRODUCED OR COPIED OR USED IN WHOLE OR IN PART AS THE BASIS FOR THE MANUFACTURE OR SALE OF ITEMS WITHOUT WRITTEN PERMISSION.
COPYRIGHT (C) 1981. DIGITAL EQUIPMENT CORPORATION "

This drawing and specifications, herein, are the property of Digital Equipment Corporation and shall not be reproduced or copied or used in whole or in part as the basis for the manufacture or sale of items without written permission.

REV.	NUMBER	CODE	SIZE
A	7018080-0-1	WL	K

FIRST USED ON OPTION MODEL
11730

QTY.	DESCRIPTION	PART NO.	ITEM NO.
	PARTS LIST		

DRN. P. Pongratz	DATE 27 July 81	digital EQUIPMENT CORPORATION MAYNARD, MASSACHUSETTS
CHK'D. D.M. Landay	DATE 2 DEC 81	
ENG. D.M. Landay	DATE 2 DEC 81	
PROJ. ENG. D.M. Landay	DATE 2 DEC 81	
PROD. Jack Greene	DATE 2 Dec 81	

NEXT HIGHER ASSEMBLY
7018078-0-0

SCALE NONE

SHEET 1 OF 1

TITLE
11730 BACKPLANE
(730Z)

SIZE	CODE	NUMBER	REV.
K	WL	7018080-0-1	A

DIST.

REVISIONS	REV.	CHANGE NO.	CHK

DEC FORM NO.
DRB 109

TW

This drawing and specifications herein, are the property of Digital Equipment Corporation and shall not be reproduced or copied or used in whole or in part as the basis for the manufacture or sale of items without written permission.

AUTOMATIC WIRE TESTER (AWT) REVISION STATUS

DRAWING NUMBER	INIT REL
	T10
D-AD-7018080-0-0	A
K-WL-7018080-0-1	A
5014598-00	REF
K-WL-7018080-0-DBW	A

REV A

SIZE A CODE AWT NUMBER 7018080-0-2

REVISIONS | REV | CHANGE NO. | CHK

DRN		DATE 27 July 81
CHK'D		DATE 2 DEC 81
ENG		DATE 2 DEC 81
PROJ. ENG.		DATE 2 DEC 81
PROD		DATE 2 Dec 81

FIRST USED ON 7018078-0-0

SCALE NONE

SHEET 1 OF 1

digital

TITLE

11730 BACKPLANE

AWT REVISION STATUS

SIZE	CODE	NUMBER	REV
A	AWT	7018080-0-2	A

DIST

DRA 123

TW

"THE MATERIAL HEREIN IS FOR INFORMATION PURPOSES ONLY AND IS SUBJECT TO CHANGE WITHOUT NOTICE. DIGITAL EQUIPMENT CORPORATION ASSUMES NO RESPONSIBILITY FOR ANY ERRORS WHICH MAY APPEAR HEREIN."

FIELD MAINTENANCE PRINT SET

"THIS DRAWING AND SPECIFICATIONS, HEREIN, ARE THE PROPERTY OF DIGITAL EQUIPMENT CORPORATION AND SHALL NOT BE REPRODUCED OR COPIED OR USED IN WHOLE OR IN PART AS THE BASIS FOR THE MANUFACTURE OR SALE OF ITEMS WITHOUT WRITTEN PERMISSION. COPYRIGHT © 1981 DIGITAL EQUIPMENT CORPORATION."

TABLE OF CONTENTS

B-TC-H7202-0-1	H7202 POWER SUPPLY
B-DD-H7202-0	H7202 POWER SUPPLY
E-UA-H7202-0-0	H7202 POWER SUPPLY
K-PL-H7202-0-DBP	H7202 POWER SUPPLY PARTS LIST
D-IC-H7202-0-2	H7202B INTERCONNECT
D-UA-H7200-0-0	5V POWER MODULE
K-PL-H7200-0-DBP	5V POWER MODULE
B-UA-H7211-0-0	COMMUNICATIONS POWER MODULE
K-PL-H7211-0-DBP	COMMUNICATIONS POWER MODULE
B-UA-H7213-0-0	MEMORY POWER MODULE
K-PL-H7213-0-DBP	MEMORY POWER MODULE
E-AD-7017635-0-0	H7202 BOX ASSY
K-PL-7017635-0-DBP	H7202 BOX ASSY
D-UA-5413857-0-0	MAJOR BOARD (+5V60A)
K-PL-5413857-0-DBP	MAJOR BOARD (+5V60A)
D-CS-5413857-0-1	MAJOR BOARD (+5V60A)
E-UA-5413869-0-0	MEMORY REG BOARD (+5V)
K-PL-5413869-0-DBP	MEMORY REG BOARD (+5V)
D-CS-5413869-0-1	MEMORY REG BOARD (+5V)
E-UA-5413867-0-0	COM REG BOARD (±15V)
K-PL-5413867-0-DBP	COM REG BOARD (±15V)
D-CS-5413867-0-1	COM REG BOARD (±15V)
D-UA-5413877-0-0	DISTRIBUTION BOARD
K-PL-5413877-0-DBP	DISTRIBUTION BOARD
D-CS-5413877-0-1	DISTRIBUTION BOARD
A-SP-H7202-B-0	H7202B P.S. ENG. SPEC
A-SP-3700635-0-0	PKG. P.S. H7202/H7200

UNIT VARIATIONS COVERED BY THIS PRINT SET
H7202B

Field Maintenance Print Set NO. MP01257

Digital Equipment Corporation

REV. B

SIZE B CODE TC NUMBER H7202-0-1

REVISIONS		
REV	B	
CHG. NO.	H7202-TW1	
DATE	3-82	

USED ON OPTION/MODEL	
VAX11/730	

SHEET 1 OF 1

DRN.	G. Katugis	DATE 2/20/81
CHK'D	J.F. Sullivan	DATE 2/20/81
PROJ. ENG.	C S Landers	DATE 2/20/81
FIELD SERV.	W Macy	DATE 10/9/81

digital

TITLE: H7202 POWER SUPPLY

SIZE	CODE	NUMBER	REV.
B	TC	H7202-0-1	B

DIST.

DRB 124

TW

"THE MATERIAL HEREIN IS FOR INFORMATION PURPOSES ONLY AND IS SUBJECT TO CHANGE WITHOUT NOTICE. DIGITAL EQUIPMENT CORPORATION ASSUMES NO RESPONSIBILITY FOR ANY ERRORS WHICH MAY APPEAR HEREIN."

DRAWING DIRECTORY

"THIS DRAWING AND SPECIFICATIONS, HEREIN, ARE THE PROPERTY OF DIGITAL EQUIPMENT CORPORATION AND SHALL NOT BE REPRODUCED OR COPIED OR USED IN WHOLE OR IN PART AS THE BASIS FOR THE MANUFACTURE OR SALE OF ITEMS WITHOUT WRITTEN PERMISSION. COPYRIGHT © 1981 DIGITAL EQUIPMENT CORPORATION.

UNIT VARIATIONS

VAR	TITLE
H7202B	H7202 POWER SUPPLY

REVISIONS

REV.	CHANGE NO.	CHK

USED ON OPTION/MODEL: VAX11/730

SHEET 1 OF 3

		DATE
DRN.	G. Kartagis	2/20/81
CHK'D.	J.F. Sullivan	2/20/81
PROJ. ENG.	C S Landeau	2/20/81
PROD.	V Mitchell	10/19/81

TITLE: H7202 POWER SUPPLY

digital

SIZE	CODE	NUMBER	REV
B	DD	H7202 - 0	A

DIST.

TW

DRB 106A

"THIS DRAWING AND SPECIFICATIONS, HEREIN, ARE THE PROPERTY OF DIGITAL EQUIPMENT CORPORATION AND SHALL NOT BE REPRODUCED OR COPIED OR USED IN WHOLE OR IN PART AS THE BASIS FOR THE MANUFACTURE OR SALE OF ITEMS WITHOUT WRITTEN PERMISSION.
COPYRIGHT © 1981 DIGITAL EQUIPMENT CORPORATION"

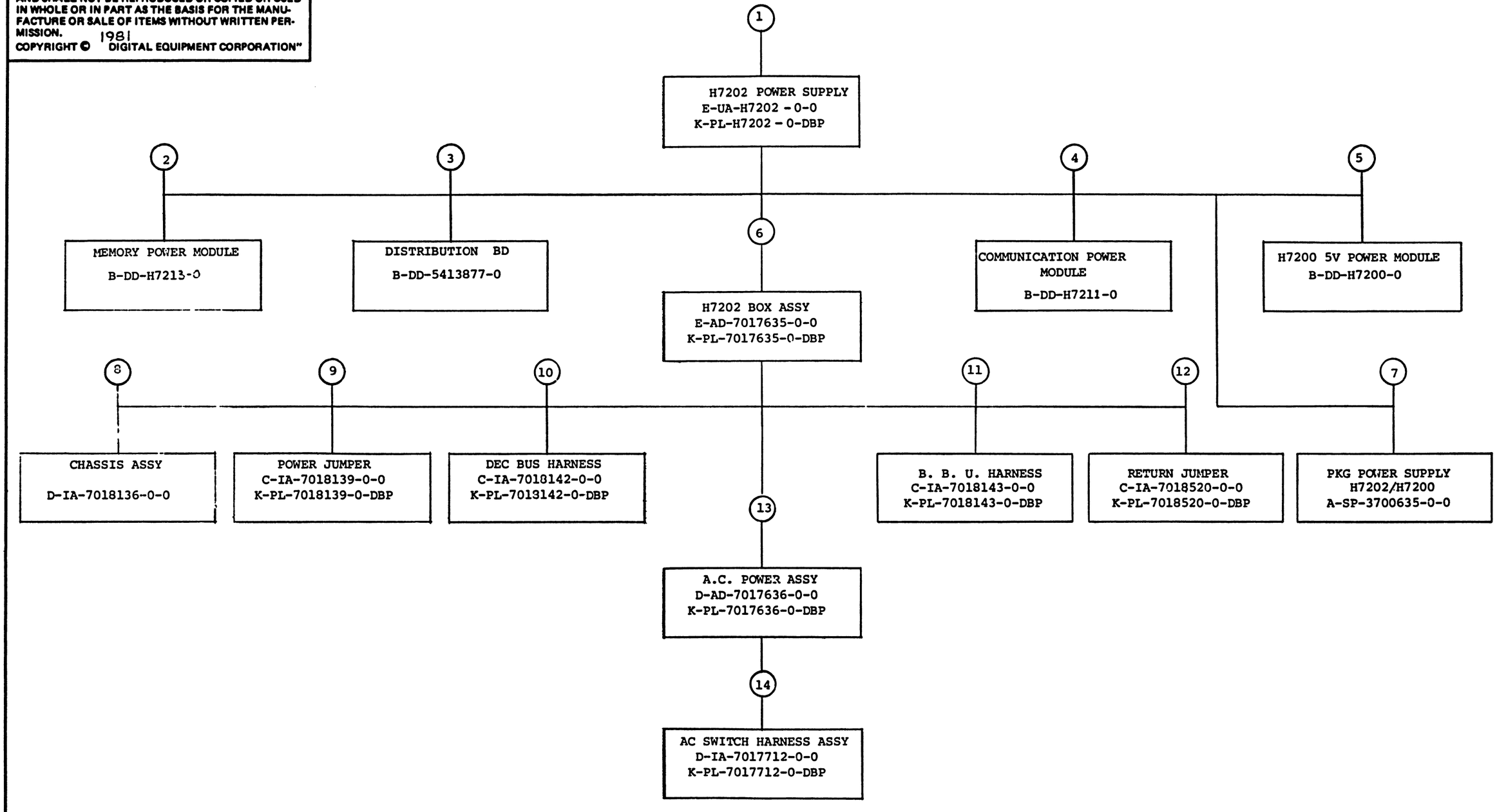

TITLE		SIZE	CODE	NUMBER	REV
H7202 POWER SUPPLY	SHEET 2 OF 3	B	DD	H7202 - 0	A

FIND NO.	DRAWING NO.	DESCRIPTION	TYPE
1	MP02157	FIELD MAINTENANCE PRINT SET (MP)	-
	B-TC-H7202-0-1	FIELD MAINTENANCE PRINTSET (TC)	-
	E-UA-H7202-0-0	H7202 POWER SUPPLY	E/M
	K-PL-H7202-0-DBP	H7202 POWER SUPPLY PARTS LIST	E/M
	D-MD-7424254-0-0	COVER TOP	M
	D-IA-7424260-0-0	PANEL, ACCESS	M
	B-MD-7425394-0-0	COVER, SWITCH	M
	A-DC-3618426-0-0	LABEL, P.S. H7202	M
	A-DC-3612063-0-0	LABEL ADHESIVE	M
	A-DC-3613211-0-0	DECAL CSA	M
	A-DC-3618427-0-0	LABEL, CAUTION	M
	A-DC-3615087-02	LABEL, "DANGER-HIGH CURRENT"	M
2	B-DD-H7213-0	MEMORY POWER MODULE	E/M
3	B-DD-5413877-0	DISTRIBUTION BOARD	E/M
4	B-DD-H7211-0	COMMUNICATION POWER MODULE	E/M
5	B-DD-H7200-0	H7200 5V POWER MODULE	E/M
6	E-AD-7017635-0-0	H7202 BOX ASSY	E/M
	K-PL-7017635-0-DBP	H7202 BOX ASSY PARTS LIST	E/M
	D-IA-7424257-0-0	BRACKET POWER CONN	M
	D-MD-7425398-0-0	INSULATOR, POWER CONN	M
	D-MD-7424259-0-0	CONNECTOR MTG. BRACKET	M
	C-MD-7425494-0-0	INSULATOR, P.C. BOARD	M
	C-MD-7425401-0-0	INSULATOR, SHIELD	M
7	A-SP-3700635-0-0	PKG POWER SUPPLY H7202/H7200	M
8	D-IA-7018136-0-0	CHASSIS ASSY	M
	E-MD-7424252-0-0	CHASSIS, LEM	M
	D-MD-7424253-0-0	PLATE, END	M
9	C-IA-7018139-0-0	JUMPER, POWER	E/M
	K-PL-7018139-0-DBP	JUMPER, POWER PARTS LIST	E/M
10	C-IA-7018142-0-0	DEC BUS HARNESS	E/M
	K-PL-7018142-0DBP	DEC BUS HARNESS	E/M
11	C-IA-7018143-0-0	HARNESS, BBU	E/M
	K-PL-7018143-0-DBP	HARNESS, BBU PARTS LIST	E/M
12	C-IA-7018520-0-0	JUMPER, RETURN	E/M
	K-PL-7018520-0-DBP	JUMPER, RETURN PARTS LIST	E/M
13	D-AD-7017636-0-0	AC POWER ASSY	E/M
	K-PL-7017636-0-DBP	AC POWER ASSY PARTS LIST	E/M
	D-MD-7424258-0-0	BRACKET, C.B. MTG	M
14	D-IA-7017712-0-0	HARNESS ASSY, AC SWITCH	E/M
	K-PL-7017712-0-DBP	HARNESS ASSY, AC SWITCH PARTS LIST	E/M

TYPE: E ELECTRICAL
M MECHANICAL
E/M ELECTRO/MECHANICAL

digital

TITLE	SHEET	SIZE	CODE	NUMBER	REV
H7202 POWER SUPPLY	3 OF 3	B	DD	H7202-0	A

DRB 108A

TW

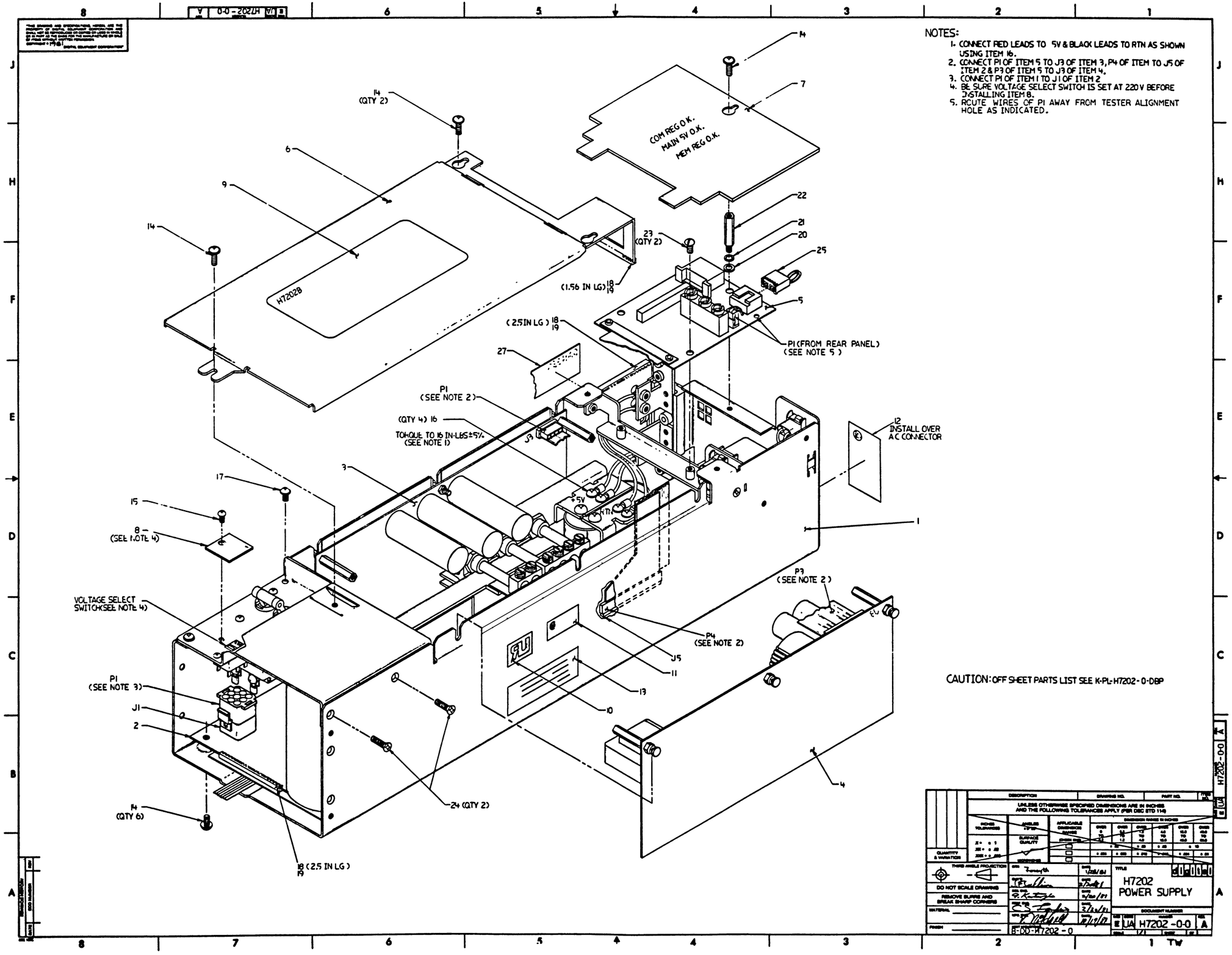

NOTES:

1. CONNECT RED LEADS TO 5V & BLACK LEADS TO RTN AS SHOWN USING ITEM 16.
2. CONNECT P1 OF ITEM 5 TO J3 OF ITEM 3, P4 OF ITEM TO J5 OF ITEM 2 & P3 OF ITEM 5 TO J3 OF ITEM 4.
3. CONNECT P1 OF ITEM 1 TO J1 OF ITEM 2
4. BE SURE VOLTAGE SELECT SWITCH IS SET AT 220 V BEFORE INSTALLING ITEM 8.
5. ROUTE WIRES OF P1 AWAY FROM TESTER ALIGNMENT HOLE AS INDICATED.

CAUTION: OFF SHEET PARTS LIST SEE K-PL-H7202-0-DBP

UNLESS OTHERWISE SPECIFIED DIMENSIONS ARE IN INCHES AND THE FOLLOWING TOLERANCES APPLY (PER DEC STD 114)

DO NOT SCALE DRAWING

REMOVE BURRS AND BREAK SHARP CORNERS

TITLE: H7202 POWER SUPPLY

DOCUMENT NUMBER: E UA H7202-0-0 A

B-DD-H7202-0

LINE	ITEM	DOCUMENT NUMBER	PART NUMBER	DESCRIPTION	QUANTITY PER VARIATION B
1	1	E-AD-7017635-0-0	7017635-00	H7202 BOX ASSY.	1
2	2	D-UA-H7200-0-0	H7200-00	5V POWER MODULE: 5V 60A,300V 200	1
3	3	B-UA-H7211-0-0	H7211-00	COMM OPT PS: +15V 2A,-15V 3A,+12	1
4	4	3-UA-H7213-0-0	H7213-00	MEMORY PWR MODULE: +5V 15A,+12V	1
5	5	D-UA-5413877-0-0	5413877-00	H7202 DIST BOARD	1
6	6	D-MD-7424254-0-0	7424254-00	TOP COVER	1
7	7	D-IA-7424260-0-0	7424260-00	ACCESS PANEL	1
8	8	B-MD-7425394-0-0	7425394-00	COVER,SWITCH	1
9	9		3618426-01	LABEL,P.S. H7202	1
10	10		3612063-00	LABEL, ,ADHESIVE I.D. FOR UL C	1
11	11		3613211-00	DECAL,CLEAR PREPRINTED CSA 1-1/4	1
12	12		3618427-01	LABEL,CAUTION VOLTAGE SETTING	1
13	13		9009255-00	LABEL, POWER SUPPLY, 2-15/16 " L	1
14	14		9009984-00	SCREW, SEMS, PHILLIPS PAN HD, 6-	10
15	15		9010128-00	SCREW,TAPPING,TYPE PAN ,PHIL,	1
16	16		9010174-01	SCREW,PAN,PHIL,SEMS 8-32X'.31 L	4
17	17		9010148-01	SCREW TRUSS PHIL 6-32X 5/16	1
18	18		9007035-00	GROMMET #122-37-1500	7
19	19		9009157-00	ADH,LIQ.RM.TEMP CURING COLORLESS	A/R
20	20		9006656-00	WASHER, FLAT, .312 O.D. X .156 I	1
21	21		9009882-00	WASHER, LOCK, INT TOOTH #6	1
22	22		9000001-05	STANDOFF,HEX,M/F 6-32X 1	1
23	23		9008212-00	SCREW, NYLON, SLTD PAN HD, 6-32	2
24	24		9009730-00	SCREW, PHILLIPS FLAT AD, 6-32 X	2
25	25	C-IA-7018535-0-0	7018535-00	JUMPER TOY POWER	1
26	26		3700635-02	PKG. POWER SUPPLY H7202/H7200	1
27	27		3615087-02	LABEL,"DANGER-HIGH CURRENT"	1

REVISION HISTORY		
ENG	ECO NUMBER	REV
---	INITIAL	A

BASIC PART NO: H7202

SECTION A OF A

SECTION. VARIATION INDEX

[A] B

[B]

[C]

[D]

[E]

[F]

DRN: T.MCCULLOUGH — DATE: 19-FEB-81

CHK'D: J.SULLIVAN — DATE: 19-FEB-81

DES.ENG.: A.KANTARGIS — DATE. 19-FEB-81

RESP.ENG.: C.LANDINO — DATE: 19-FEB-81

MFG.ENG.: V.MITCHELL — DATE: 19-FEB-81

ASSEMBLY NUMBER: E-UA-H7202-0-0

TOP DOCUMENT NUMBER: B-DD-H7202-0-0

DIGITAL

TITLE PARTS LIST

H7202 POWER SUPPLY

DOCUMENT NUMBER

SIZE	CODE	NUMBER	REV
K	PL	H7202-0-DBP	A

FILE NAME: 22281A.PLS

EDIT # 10

"THIS DRAWING AND SPECIFICATIONS HEREIN, ARE THE PROPERTY OF DIGITAL EQUIPMENT CORPORATION AND SHALL NOT BE REPRODUCED OR COPIED OR USED IN WHOLE OR IN PART AS THE BASIS FOR THE MANUFACTURE OR SALE OF ITEMS WITHOUT WRITTEN PERMISSION.
COPYRIGHT (C) 1981. DIGITAL EQUIPMENT CORPORATION "

LINE ITEM	DOCUMENT NUMBER	PART NUMBER	DESCRIPTION	QUANTITY PER VARIATION B

28 NOTE: ITEM 18 IS IN INCHES.
29 NOTE: ITEM 26 IS BULK PKG FOR (48) UNIT. FOR INDIVIDUAL PKG USE 3700635-01 QTY 1.

DIGITAL	TITLE	SIZE	CODE	DOCUMENT NUMBER	REV
	H7202 POWER SUPPLY SECTION A OF A	K	PL	H7202-0-DBP	A

THIS DRAWING AND SPECIFICATIONS, HEREIN, ARE THE PROPERTY OF DIGITAL EQUIPMENT CORPORATION AND SHALL NOT BE REPRODUCED OR COPIED OR USED IN WHOLE OR IN PART AS THE BASIS FOR THE MANUFACTURE OR SALE OF ITEMS WITHOUT WRITTEN PERMISSION.
COPYRIGHT © 1981
DIGITAL EQUIPMENT CORPORATION

H7202-0-2

H7211
COM POWER MODULE

J3 OUTPUTS

-15V
±15RTN
+15V
CH3OK A

P1

J1: +150 VDC, -150 VDC, CHASSIS GND, +14V, -14V, BIAS RTN
J2: CLOCK, CH3 INH, FREQ SHIFT, CH3 O K

P1
-150VDC BBU 2
+150VDC

AC INPUT
FILTER
0 N

P3
3 4 1 2 6 5
P2

S1 VOLTAGE SELECTION
1B 1 1A
230 115
2B 2 2A
2 1 N
4 3 0
CB1 15A

CHASSIS GROUND
CONNECTION MADE BY MOUNTING SCREWS

H7200
5V POWER MODULE

J1
1 115 NEUT
2
3 KEY
4 -150VDC
5
6 230V NEUT
7 PHASE
8
9 +150VDC
P1

70-17636 AC POWER ASSY

5V RTN
+5V

60 AMP OUTPUT

CH O.K. INDICATORS

J5 P3

RMT SENSE +	1	D
RMT SENSE −	2	E
A.C. LOW	3	F
D.C. LOW	4	G
KEY	5	
LTC	6	H
SIG RTN	7	I
BOOT EN	8	J
BUS RTN	9	K
STBY	10	L
SHT DN	11	M
PWR. REQ.	12	N
BAT. EN.	13	O
MOD. EN.	14	P
5V AUX	15	Q
BAT. REQ.	16	R
P.S. RTN	17	S
CH1 OK A	18	
AIR FLT	19	U
AIR FLT PULLUP	20	V
STBY SELECT	21	
CH1 STBY	22	
CH2 STBY	23	
CH3 STBY	24	

J2 BACKPLANE

W	1-5,7,9+5.1V B
D	6 RMT SENSE +
E	8 RMT SENSE −
H	10 LTC
W	11,13,14+5.1V B
J	12 BOOT EN
W	15,16 +5.1V B
B	17,19,20±15RTN
	18 TOY RTN
A	21,22 −15V
C	23,24+15V
X	25,27,29,31,33-40 +5.1V B RTN
	26 TOY+5
	28 SIG RTN
G	30 D.C. LOW
F	32 A.C. LOW

J3 TU58 POWER

Y	1 +12.3V
Z	2 +12.3V RTN
W	3 +5.1V B
X	4 +5.1V B RTN

J4 FAN ASSEMBLY

Z	1 +12.3V RTN
Y	2 +12.3V
S	3 P.S. RTN
U	4 AIR FLT
Q	5 5V AUX
V	6 AIR FLT PULLUP

J5 BBU

J5 P1

W	1	+5 V B
	2	TOY+5
X	3	+5 V B RTN
	4	TOY RTN
	5	BAT. STATUS
S	6	P.S. RTN
R	7	BAT. REQ.
P	8	MOD. EN.
	9	
O	10	BAT EN
S	11	P.S. RTN
S	12	P.S. RTN

P2 POWER CONTROL BUS

J6 P1

N	2	1 PWR REQ
M	1	2 SHT DN
K	3	3 BUS RTN

J7 CONSOLE

X	1 +5.1V B RTN
	2 BAT. STATUS
	3
L	4 STBY
N	5 PWR. REQ.
	6 KEY
	7
K	8 BUS RTN
	9
	10

J8 FAN

Y	1 +12.3V
Z	2 +12.3V RTN

J3: +150VDC, -150VDC, CHASSIS GND, +14V, -14V, BIAS RTN
J6: CLOCK, CH2 INH, FREQ SHIFT, THERMAL SHUTDOWN L, CH2 OK, CH2 CROBAR

H7213
MEMORY POWER MODULE

J3 OUTPUTS
+5.1V B
5.1V B RTN
CH2 OK A
+12.3V
+12.3V RTN

P4

DISTRIBUTION BD
54-13877

DRN Thomas F Welch	DATE 2-11-71
CHKD Fran M	DATE 2-11-71
ENGR CS Fowler	DATE 10/9/81
MFGR CS Fowler	DATE 10/9/81
MGR Theodore M Cote	DATE 10/19/81
NEXT HIGHER DWG B-DD-H7202-0	

TITLE: H7202B INTERCONNECT

DOCUMENT NUMBER: D | IC | H7202-0-2 | A

SCALE | SHEET | OF

T.W.

REVISION HISTORY	ECO NUMBER	DATE	REV

SIZE CODE NUMBER REV
D IC H7202-0-2 A

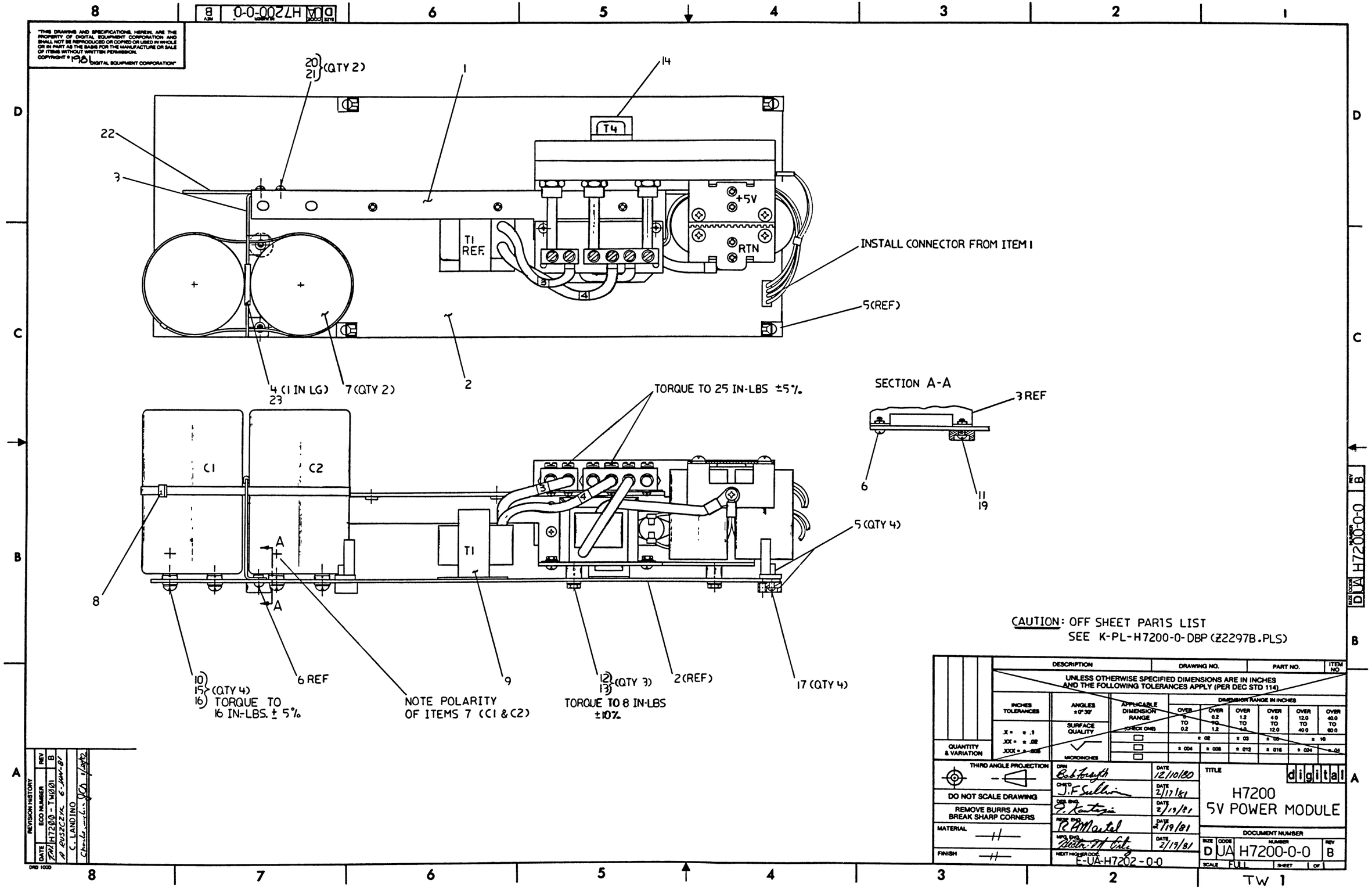

CAUTION: OFF SHEET PARTS LIST
SEE K-PL-H7200-0-DBP (Z2297B.PLS)

DESCRIPTION	DRAWING NO.	PART NO.	ITEM NO

UNLESS OTHERWISE SPECIFIED DIMENSIONS ARE IN INCHES AND THE FOLLOWING TOLERANCES APPLY (PER DEC STD 114)

INCHES TOLERANCES	ANGLES ±0°30'	APPLICABLE DIMENSION RANGE (CHECK ONE)	DIMENSION RANGE IN INCHES					
			OVER 0 TO 0.2	OVER 0.2 TO 1.2	OVER 1.2 TO 4.0	OVER 4.0 TO 12.0	OVER 12.0 TO 40.0	OVER 40.0 TO 60.0
.X = ± .1	SURFACE QUALITY		± .02		± .03	± .05	± .10	
.XX = ± .02			± .004	± .008	± .012	± .016	± .024	± .04
.XXX = ± .005	MICROINCHES							

QUANTITY & VARIATION

THIRD ANGLE PROJECTION

DO NOT SCALE DRAWING

REMOVE BURRS AND BREAK SHARP CORNERS

MATERIAL —//—

FINISH —//—

		DATE
DRN	Bob Forsyth	12/10/80
CHK'D	J.F. Sullivan	2/17/81
DES. ENG.	G. Kantazis	2/19/81
RESP. ENG.	R.A. Martel	2/19/81
MFG. ENG.	Hector M. Cruz	2/19/81

NEXT HIGHER DOC. E-UA-H7202-0-0

TITLE digital

H7200
5V POWER MODULE

DOCUMENT NUMBER

SIZE	CODE	NUMBER	REV
D	UA	H7200-0-0	B

SCALE FULL SHEET 1 OF 1

TW 1

REVISION HISTORY

DATE	ECO NUMBER	REV
T.M.	H7200-TW001	B
	A RUSZCZYK 6-JAN-81	
	C. LANDINO	
	Charles Landino	

DRD 1000

SIZE D CODE UA NUMBER H7200-0-0 REV B

"THIS DRAWING AND SPECIFICATIONS, HEREIN, ARE THE PROPERTY OF DIGITAL EQUIPMENT CORPORATION AND SHALL NOT BE REPRODUCED OR COPIED OR USED IN WHOLE OR IN PART AS THE BASIS FOR THE MANUFACTURE OR SALE OF ITEMS WITHOUT WRITTEN PERMISSION. COPYRIGHT © 1981 DIGITAL EQUIPMENT CORPORATION"

AUTOMATED BY PRTLST.3P(44) — P A R T S L I S T — SHEET A1 OF A2

LINE	ITEM	DOCUMENT NUMBER	PART NUMBER	DESCRIPTION	QUANTITY PER VARIATION 00
1	1	D-UA-7017638-0-0	7017638-00	OUTPUT ASSY.	1
2	2	D-UA-5413857-0-0	5413857-00	H7200 MAJOR BD	1
3	3	C-MD-7424279-0-0	7424279-00	BRACKET,TAF,SUPPORT	1
4	4		9008209-00	GROMMET, STRIP X 650	1
5	5	D-MD-7425495-0-0	7425495-00	CARD GUIDE	4
6	6		9010148-01	SCREW TRUSS PHIL 6-32X 5/16	1
7	7		1018989-00	3300 MFD 200V +50-10% AL EL	2
8	8		9010006-00	TIE,CABLE BUNDL.DIA -4"TYPE=101	1
9	9		1617441-00	XFMR P=370V S=28,60,86V	1
10	10		9000038-07	SCREW,PAN,PHIL 10-32X 3/8 BR/T	4
11	11		1216435-00	BUMPER	1
12	12		9006656-00	WASHER, FLAT, .312 O.D. X .156 I	3
13	13		9008185-00	NUT,KEP 6-32X 1/4 AF	3
14	14		1617638-00	XFMR,FLYBACK BIAS,HIGH FREQUENCY	1
15	15		9008978-00	WASHER,LOCK,INT,.375OD X .200ID	4
16	16		9009950-01	WASHER,FLAT BR/TIN .203IDX .4380	4
17	17		9009800-05	SCREW,PAN,PHILLIPS, 4X.38	4
18	18	A-SP-3700635-0-0	3700635-03	PKG. POWER SUPPLY H7202/H7200	A/R
19	19		9009989-00	SCREW,PAN ,PHIL, 6-32X 3/8	1
20	20		9006659-00	WASHER, FLAT, .375 O.D. X .156 I	2
21	21		9008212-00	SCREW, NYLON, SLTD PAN HD, 6-32	2
22	22		7426130-00	BARRIER,B.S.	1
23	23		9009157-00	ADH,LIQ.RM.TEMP CURING COLORLESS	A/R

24 NOTE: ITEM 18 IS A CUSTOMER/FIELD SERVICE PKG AND THE QTY IS DETERMIND BY MFG-
25 NOTE: FOR BULK PKG (88) UNITS USE 3700635-04, QTY 1 .

REVISION HISTORY		
ENG	ECO NUMBER	REV
---	INITIAL	A
---	TW001	A
CL	H7200-TW001	B

BASIC PART NO: H7200
SECTION A OF A
SECTION. VARIATION INDEX
[A] 00
[B]
[C]
[D]
[E]
[F]

DRN: T.MCCULLOUGH — DATE: 06-JAN-81
CHK'D: J.SULLIVAN — DATE: 06-JAN-81
DES.ENG.: A.KANTARGIS — DATE: 06-JAN-81
RESP.ENG.: D.MARTEL — DATE: 19-FEB-81
MFG.ENG.: V.MITCHELL — DATE: 19-FEB-81
ASSEMBLY NUMBER: D-UA-H7200-0-0
TOP DOCUMENT NUMBER: B-DD-H7202-0-0

D I G I T A L

TITLE: PARTS LIST
H7200 5V POWER MODULE

DOCUMENT NUMBER

SIZE	CODE	NUMBER	REV
K	PL	H7200-0-DBP	B

FILE NAME: Z2297B.PLS
EDIT #: 10

"THIS DRAWING AND SPECIFICATIONS HEREIN, ARE THE PROPERTY OF DIGITAL EQUIPMENT CORPORATION AND SHALL NOT BE REPRODUCED OR COPIED OR USED IN WHOLE OR IN PART AS THE BASIS FOR THE MANUFACTURE OR SALE OF ITEMS WITHOUT WRITTEN PERMISSION.
COPYRIGHT (C) 1982. DIGITAL EQUIPMENT CORPORATION "

AUTOMATED BY PRTLST.3P(44) P A R T S L I S T SHEET A2 OF A2

LINE ITEM	DOCUMENT NUMBER	PART NUMBER	DESCRIPTION	QUANTITY PER VARIATION 00
26	NOTE: ITEM 4 IS IN INCHES.			

D	I	G	I	T	A	L	TITLE	H7200 5V POWER MODULE	SECTION A OF A	SIZE K / CODE PL / DOCUMENT NUMBER H7200-0-DBP / REV B

"THIS DRAWING AND SPECIFICATIONS, HEREIN, ARE THE PROPERTY OF DIGITAL EQUIPMENT CORPORATION AND SHALL NOT BE REPRODUCED OR COPIED OR USED IN WHOLE OR IN PART AS THE BASIS FOR THE MANUFACTURE OR SALE OF ITEMS WITHOUT WRITTEN PERMISSION.

COPYRIGHT © 1981 DIGITAL EQUIPMENT CORPORATION

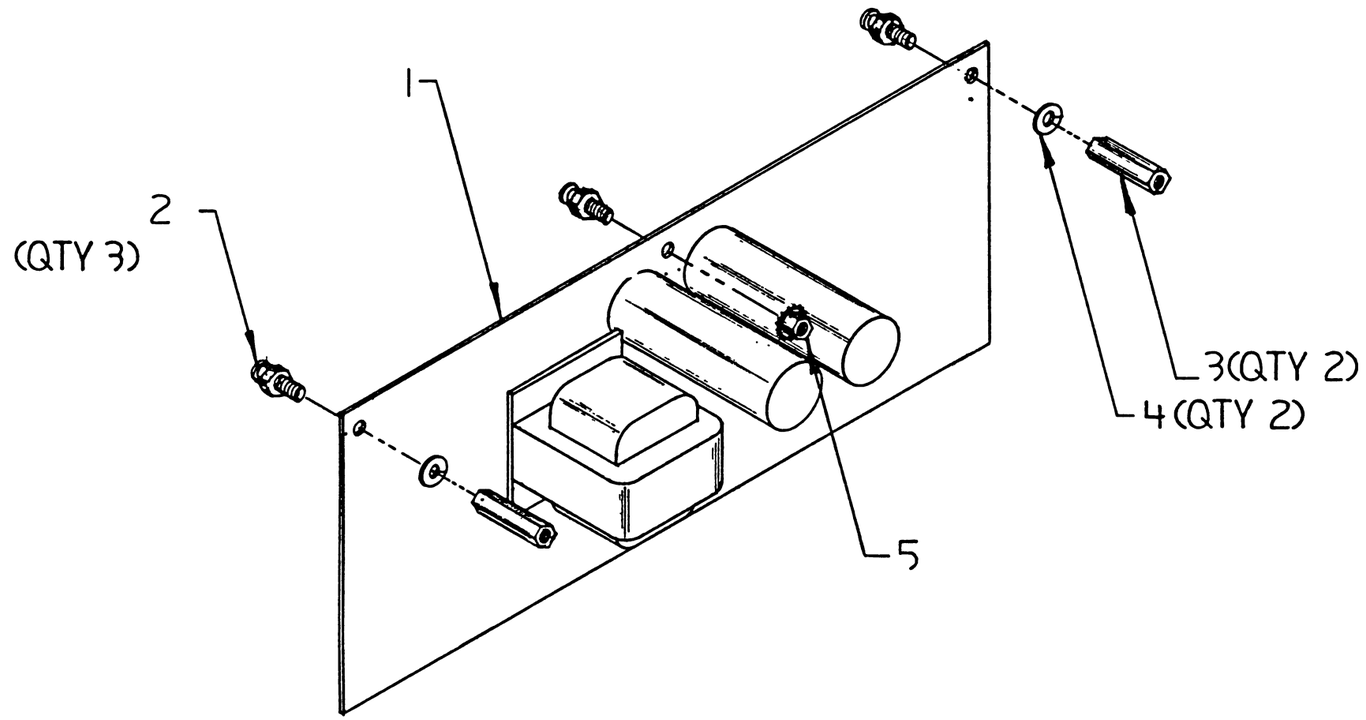

CAUTION: OFF SHEET PARTS LIST
SEE K-PL-H7211-0-DBP

DESCRIPTION	DWG./PART NO.	ITEM NO.

UNLESS OTHERWISE SPECIFIED DIMENSIONS ARE IN INCHES

ANGLES ±0° 30'	CLASS OF ACCURACY (CHECK ONE)	NOMINAL DIMENSION RANGE INCHES: OVER 0 TO 0.2	OVER 0.2 TO 1.2	OVER 1.2 TO 4.0	OVER 4.0 TO 12.0	OVER 12.0 TO 40.0	OVER 40.0 TO 80.0
SURFACE QUALITY IN ✓ MICROINCHES	MEDIUM ☐	±.004	±.008	±.012	±.016	±.024	±.04
	PREFERRED ☐	±.012	±.016	±.025	±.04	±.063	±0.1

QUANTITY & VARIATION

THIRD ANGLE PROJECTION

REMOVE BURRS AND BREAK SHARP CORNERS

DO NOT SCALE DWG

MATERIAL —//—

FINISH —//—

DRN.	Forsyth	2/11/81
CHK'D	J.F. Kallian	2/19/81
ENG.	G. Kotanyi	2/19/81
PROJ. ENG.	[illegible]	2/19/81
PROD.	Victor [illegible]	2-19-81
NEXT HIGHER ASSY.		

E-UA-H7202-0-0

SCALE 1:2

SHEET 1 OF 1

FIRST USED ON H7202B

digital

TITLE COMMUNICATION POWER MODULE

SIZE	CODE	NUMBER	REV.
B	UA	H7211-0-0	A

DIST.

REVISIONS: REV. | CHANGE NO. | CHK

DRB 100A

TW

AUTOMATED BY PRTLST.3P(44) P A R T S L I S T SHEET A1 OF A1

LINE	ITEM	DOCUMENT NUMBER	PART NUMBER	DESCRIPTION	QUANTITY PER VARIATION 00
1	1	D-UA-5413867-0-0	5413867-00	H7211 COMMUNICATION REG	1
2	2	B-MD-7425185-0-0	7425185-00	SPACER,PCB	3
3	3		9006809-00	SPACER, HEX, ALUM, .138 ID X 1.0	2
4	4		9007801-00	WASHER, LOCK, S.S. #6	2
5	5		9009243-00	NUT,KEP 6-32 X5/16AF	1
6	6	A-SP-3700635-0-0	3700635-05	PKG. POWER SUPPLY H7202/H7200	A/R

7 NOTE: ITEM 6 IS A CUSTOMER/FIELD SERVICE PKG AND THE QTY IS DETERMINED BY MFG.

(2((2i0 ¢

REVISION HISTORY			BASIC PART NO: H7211									
ENG	ECO NUMBER	REV	SECTION A OF A	DRN: T.MCCULLOUGH	DATE: 19-FEB-81		D	I	G	I	T	A	L
---	INITIAL	A	SECTIO.hVa[YATION INDEX: [A] 00	CHK'D: J.SULLIVAN	DATE: 19-FEB-81	TITLE	PARTS LIST						
			[B]	DES.ENG.: A.KANTARGIS	DATE: 19-FEB-81	COMM. POWER MODULE							
			[C]	RESP.ENG.: R.MARTEL	DATE: 19-FEB-81	DOCUMENT NUMBER							
			[D]			SIZE	CODE	NUMBER				REV	
			[E]	MFG.ENG.: V.MITCHELL	DATE: 19-FEB-81	K	PL	H7211-0-D8P				A	
			[F]	ASSEMBLY NUMBER: B-UA-H7211-0-0	TOP DOCUMENT NUMBER: B-DD-H7202-0-0			FILE NAME: Z2283.PLS				EDIT # 3	

"THIS DRAWING AND SPECIFICATIONS HEREIN, ARE THE PROPERTY OF DIGITAL EQUIPMENT CORPORATION AND SHALL NOT BE REPRODUCED OR COPIED OR USED IN WHOLE OR IN PART AS THE BASIS FOR THE MANUFACTURE OR SALE OF ITEMS WITHOUT WRITTEN PERMISSION.
COPYRIGHT (C) 1981. DIGITAL EQUIPMENT CORPORATION "

"THIS DRAWING AND SPECIFICATIONS, HEREIN, ARE THE PROPERTY OF DIGITAL EQUIPMENT CORPORATION AND SHALL NOT BE REPRODUCED OR COPIED OR USED IN WHOLE OR IN PART AS THE BASIS FOR THE MANUFACTURE OR SALE OF ITEMS WITHOUT WRITTEN PERMISSION.

COPYRIGHT© 1981 DIGITAL EQUIPMENT CORPORATION

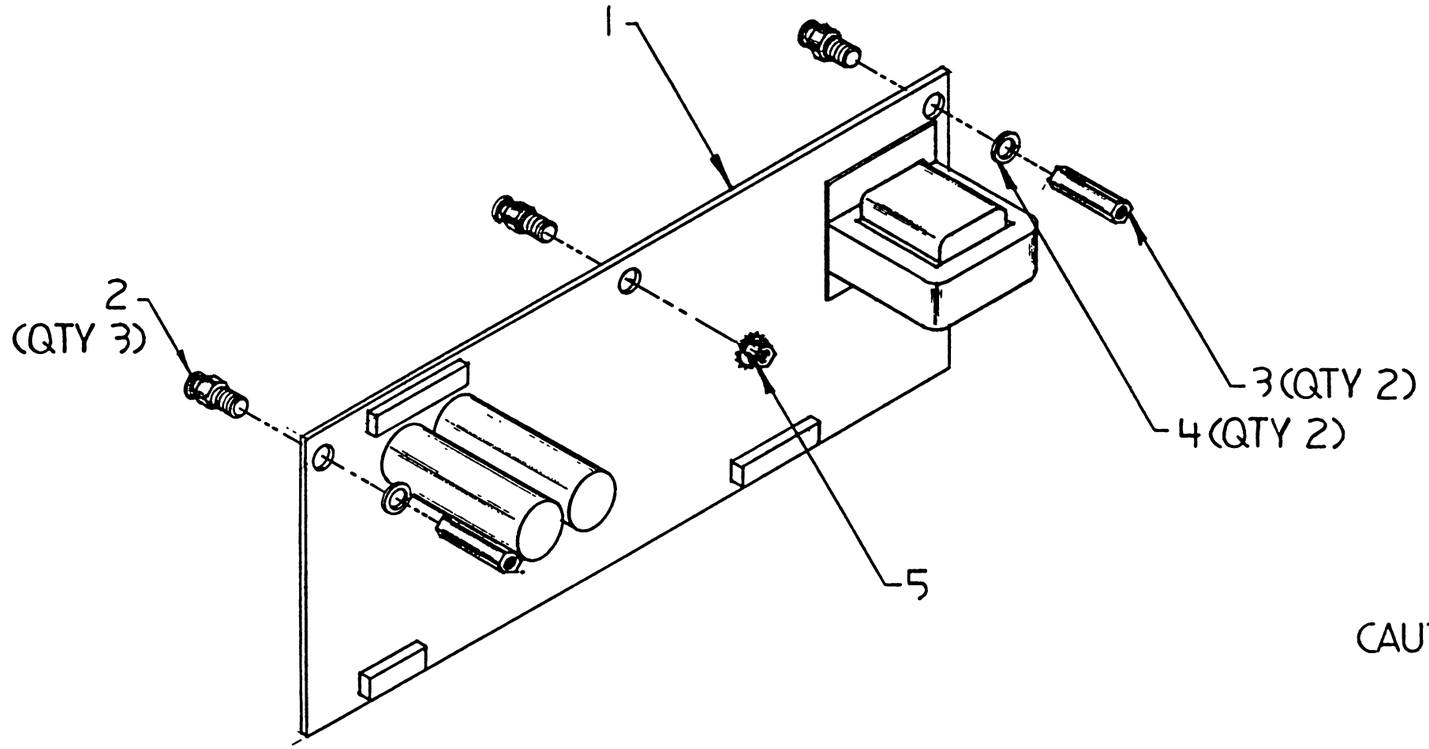

CAUTION: OFF SHEETS PARTS LIST SEE
K-PL-H7213-0-DBP

DESCRIPTION	DWG./PART NO.	ITEM NO.

UNLESS OTHERWISE SPECIFIED DIMENSIONS ARE IN INCHES

ANGLES ±0° 30'	CLASS OF ACCURACY (CHECK ONE)	NOMINAL DIMENSION RANGE INCHES					
SURFACE QUALITY IN ✓ MICROINCHES		OVER 0 TO 0.2	OVER 0.2 TO 1.2	OVER 1.2 TO 4.0	OVER 4.0 TO 12.0	OVER 12.0 TO 40.0	OVER 40.0 TO 80.0
	MEDIUM ☐	±.004	±.008	±.012	±.016	±.024	±.04
	PREFERRED ☐	±.012	±.016	±.025	±.04	±.063	±0.1

QUANTITY & VARIATION

THIRD ANGLE PROJECTION

REMOVE BURRS AND BREAK SHARP CORNERS

DO NOT SCALE DWG

MATERIAL

FINISH

DRN.	Forsyth	2/11/81
CHK'D	J. Sullivan	2/19/81
ENG.	G. Katagiri	2/19/81
PROJ. ENG.	[illegible]	2/19/81
PROD.	[illegible]	2-19-81
NEXT HIGHER ASSY.		

E-UA-H7202-0-0

SCALE 1:2

SHEET 1 OF 1

FIRST USED ON H7202B

digital

TITLE MEMORY POWER MODULE

SIZE	CODE	NUMBER	REV.
B	UA	H7213-0-0	A

DIST.

REVISIONS: REV. | CHANGE NO. | CHK

DRB 100A

TW 1

AUTOMATED BY PRTLST.3P(44) P A R T S L I S T SHEET A1 OF A1

LINE	ITEM	DOCUMENT NUMBER	PART NUMBER	DESCRIPTION	QUANTITY PER VARIATION 00
1	1	D-UA-5413869-0-0	5413869-00	H7213 MEMORY REG	1
2	2	B-MD-7425185-0-0	7425185-00	SPACER,PCB	3
3	3		9006809-00	SPACER, HEX, ALUM, .138 ID X 1.0	2
4	4		9007801-00	WASHER, LOCK, S.S. #6	2
5	5		9009243-00	NUT,KEP 6-32 X5/16AF	1
6	6	A-SP-3700635-0-0	3700635-05	PKG. POWER SUPPLY H7202/H7200	A/R

7 NOTE: ITEM 6 IS A CUTOMER/FIELD SERVICE PKG AND THE QTY IS DETERMINED BY MFG.

REVISION HISTORY			BASIC PART NO: H7213										
ENG	ECO NUMBER	REV	SECTION A OF A	DRN: T.MCCULLOUGH	DATE: 19-FEB-81		D	I	G	I	T	A	L
---	INITIAL	A	SECTION. VARIATION INDEX [A] 00	CHK'D: J.SULLIVAN	DATE: 19-FEB-81	TITLE	PARTS LIST						
			[B]	DES.ENG.: A.KANTARGIS	DATE: 19-FEB-81	MEMORY POWER MODULE							
			[C]	RESP.ENG.: R.MARTEL	DATE: 19-FEB-81	DOCUMENT NUMBER							
			[D]			SIZE	CODE	NUMBER				REV	
			[E]	MFG.ENG.: V.MITCHELL	DATE: 19-FEB-81	K	PL	H7213-0-DBP				A	
			[F]	ASSEMBLY NUMBER: B-UA-H7213-0-0	TOP DOCUMENT NUMBER: B-UA-H7213-0-0			FILE NAME: Z2282.PLS				EDIT # 3	

"THIS DRAWING AND SPECIFICATIONS HEREIN, ARE THE PROPERTY OF DIGITAL EQUIPMENT CORPORATION AND SHALL NOT BE REPRODUCED OR COPIED OR USED IN WHOLE OR IN PART AS THE BASIS FOR THE MANUFACTURE OR SALE OF ITEMS WITHOUT WRITTEN PERMISSION.
COPYRIGHT (C) 1981. DIGITAL EQUIPMENT CORPORATION "

NOTES:

1 INSTALL YEL LEAD (POS. NO. 1) OF ITEM 20 (P1) INTO POS. NO. 6 OF P2 FROM ITEM NO. 8, INSTALL GREEN LEAD (POS. NO. 2) OF ITEM 20 (P1) INTO POS. NO. 5 OF P2 FROM ITEM 8.

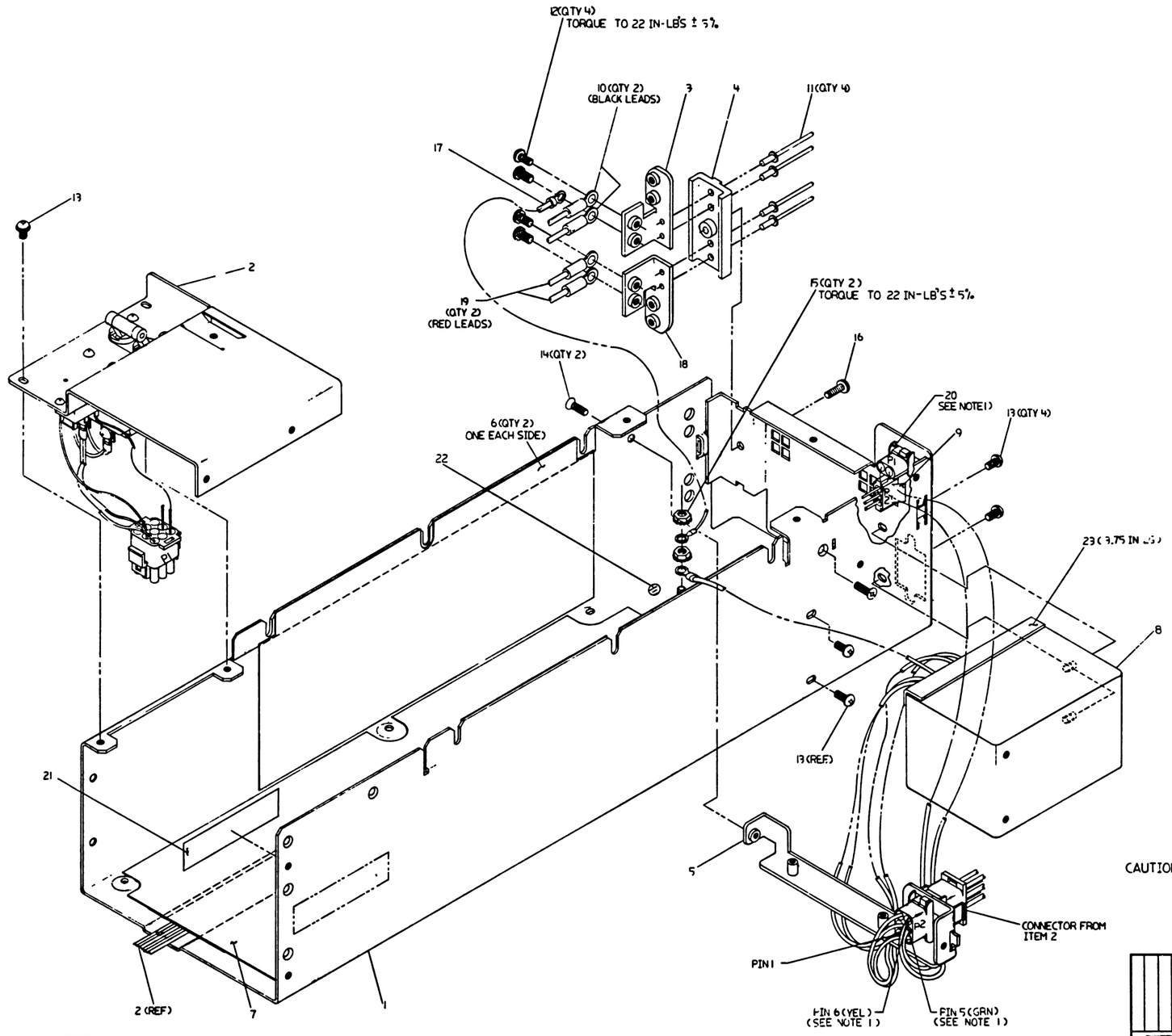

CAUTION: OFF SHEET PARTS LIST SEE K-PL-7017635-0-DBP

DESCRIPTION	DRAWING NO.	PART NO.	ITEM NO.
UNLESS OTHERWISE SPECIFIED DIMENSIONS ARE IN INCHES AND THE FOLLOWING TOLERANCES APPLY (PER DEC STD 114)			
INCHES TOLERANCES	ANGLES ±0°30'	ARBITRARY DIMENSIONS RANGE	
.X ± .1	SURFACE QUALITY		
.XX ± .02			
.XXX ± .005			
QUANTITY & VARIATION	MICROINCHES		

THIRD ANGLE PROJECTION

DO NOT SCALE DRAWING

REMOVE BURRS AND BREAK SHARP CORNERS

MATERIAL

FINISH

DRN		1/12/81
CHKD		2/19/81
APPD		2/19/81
APPD		2/19/81
APPD		2/19/81

TITLE: H7202 BOX ASSY

DOCUMENT NUMBER: E-UA-H7202-0-0

SIZE: E | CODE: AD | NUMBER: 7017635-0-0 | REV: B

SCALE: 1 | SHEET | OF

1 TW

AUTOMATED BY PRTLST,SP(44) — P A R T S L I S T — SHEET A1 OF A1

LINE	ITEM	DOCUMENT NUMBER	PART NUMBER	DESCRIPTION	QUANTITY PER VARIATION 00
1	1	D-IA-7018136-0-0	7018136-00	ASSY CHASSIS	1
2	2	D-AD-7017636-0-0	7017636-00	AC POWER ASSY	1
3	3	D-IA-7424257-0-0	7424257-00	BRACKET,POWER CONN	1
4	4	D-MD-7425398-0-0	7425398-00	INSULATOR,POWER CONNECTOR	1
5	5	D-MD-7424259-0-0	7424259-00	CONN MTG BRKT.	1
6	6	C-MD-7425494-0-0	7425494-00	INSULATOR,P.C.BOARD	2
7	7	C-MD-7425401-0-0	7425401-00	INSULATOR,SHIELD	1
8	8	A-PS-1217838-0-0	1217838-00	FILTER,LINE 115/250V,47-63HZ,6A	1
9	9	C-IA-7018142-0-0	7018142-00	DEC BUS HARNESS	1
10	10	C-IA-7018139-0-0	7018139-00	JUMPER, PWR	2
11	11		9006508-00	RIVET, BLIND, .125 DIA X .419 LG	4
12	12		9010174-01	SCREW,PAN,PHIL,SEMS 8-32X .31 L	4
13	13		9010148-01	SCREW TRUSS PHIL 6-32X 5/16	5
14	14		9009730-00	SCREW, PHILLIPS FLAT AD, 6-32 X	2
15	15		9006565-00	NUT,KEP , 10-32X 3/8 AF	1
16	16		9009800-08	SCTEW,PAN,PHIL,TAP'G 8-16X .5	1
17	17	C-IA-7018520-0-0	7018520-00	RETURN JUMPER	1
18	18	D-IA-7424257-0-0	7424257-01	BRKT-PWR-CONNECTOR	1
19	19	C-IA-7018139-0-0	7018139-01	POWER JUMPER	2
20	20	C-IA-7018143-0-0	7018143-00	BBU HARNESS	1
21	21		9009255-00	LABEL, POWER SUPPLY, 2-15/16 " L	1

REVISION HISTORY			BASIC PART NO: 7017635										
ENG	ECO NUMBER	REV	SECTION A OF A	DRN: T,MCCULLOUGH	DATE: 19-FEB-81		D	I	G	I	T	A	L
---	INITIAL	A	SECTION, VARIATION INDEX [A] 00	CHK'D: J,SULLIVAN	DATE: 19-FEB-81	TITLE PARTS LIST H7202 BOX ASSY							
			[B]	DES.ENG.: A,KANTARGIS	DATE: 19-FEB-81								
			[C]	RESP.ENG.: R,MARTEL	DATE: 19-FEB-81	DOCUMENT NUMBER							
			[D]			SIZE: K	CODE: PL	NUMBER: 7017635-0-DBP				REV: A	
			[E]	MFG.ENG.: V,MITCHELL	DATE: 19-FEB-81								
			[F]	ASSEMBLY NUMBER: E-AD-7017635-0-0	TOP DOCUMENT NUMBER: B-DD-H7202-0-0	FILE NAME: Z2285.PLS						EDIT #: 2	

"THIS DRAWING AND SPECIFICATIONS HEREIN, ARE THE PROPERTY OF DIGITAL EQUIPMENT CORPORATION AND SHALL NOT BE REPRODUCED OR COPIED OR USED IN WHOLE OR IN PART AS THE BASIS FOR THE MANUFACTURE OR SALE OF ITEMS WITHOUT WRITTEN PERMISSION. COPYRIGHT (C) 1981, DIGITAL EQUIPMENT CORPORATION "

TW

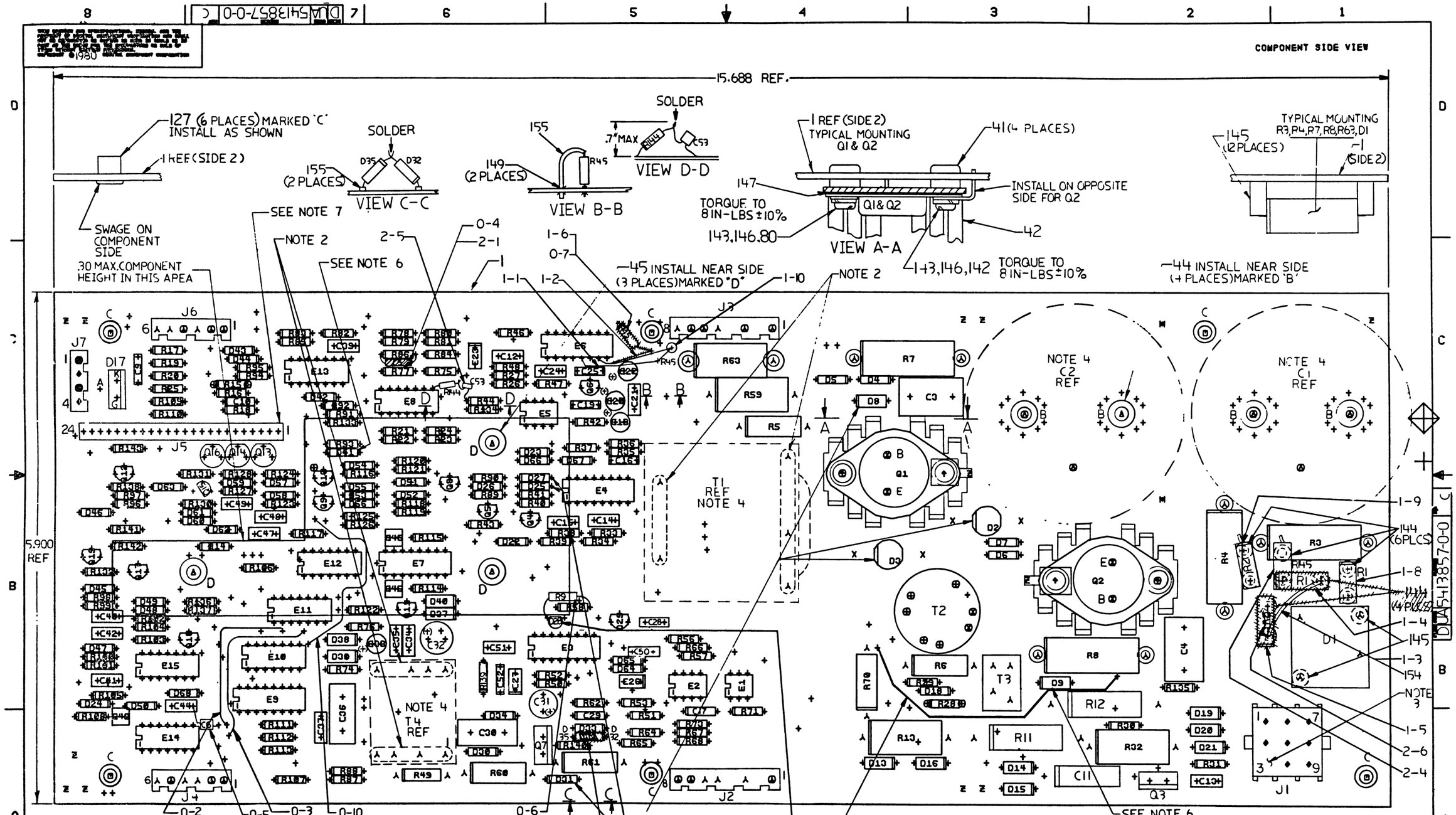

NOTES:
1. U/L APPROVAL REQUIRED.
2. MASK HOLES PRIOR TO WAVE SOLDER.
3. PULL PIN NO.3 FROM J1, PIN NO.5 FROM J5 PRIOR TO INSERTION.
4. C1, C2, T1 & T4 TO BE INSERTED AT NEXT HIGHER ASSY. LEVEL.
5. RAISE R11, R13, R60, .05 TO .10 OFF P.C. BOARD.

STEP & REPEAT	↑ Y AXIS ___ STEP ___ TIMES
	→ X AXIS ___ STEP ___ TIMES

CHK	CHANGE NO	REV
	5413857-TW1	B
	A. RUZCZYK 18-NOV-81	
	C. LANDINO	
	5413857-TW2	C
	A. RUZCZYK 12-MAR-82	
	C. LANDINO	
	C. Landino 98 5/8/82	

6. DIODES D2, D3, D8, D9, D25, D27, D31, AND D41 ARE OPPOSITE ORIENTATION TO ALL OTHER DIODES.
7. CUT PIN 5 FROM J5 (FOR KEY).

ETCH REV. C

SIGNATURES	DATE
DRN.	12-.-82
CHK'D.	12-4-82
MECH. ENG.	8/18/81
PROJ. ENG.	2/17/81
PROD.	2-18-81
SCALE 2/1	
SHT. 1 OF 3	
NEXT HIGHER ASSY. B-DD-5413857-0	

digital

TITLE H7200 MAJOR BD.

SIZE	CODE	NUMBER	REV
D	UA	5413857-0-0	C

TW ! WO#172325

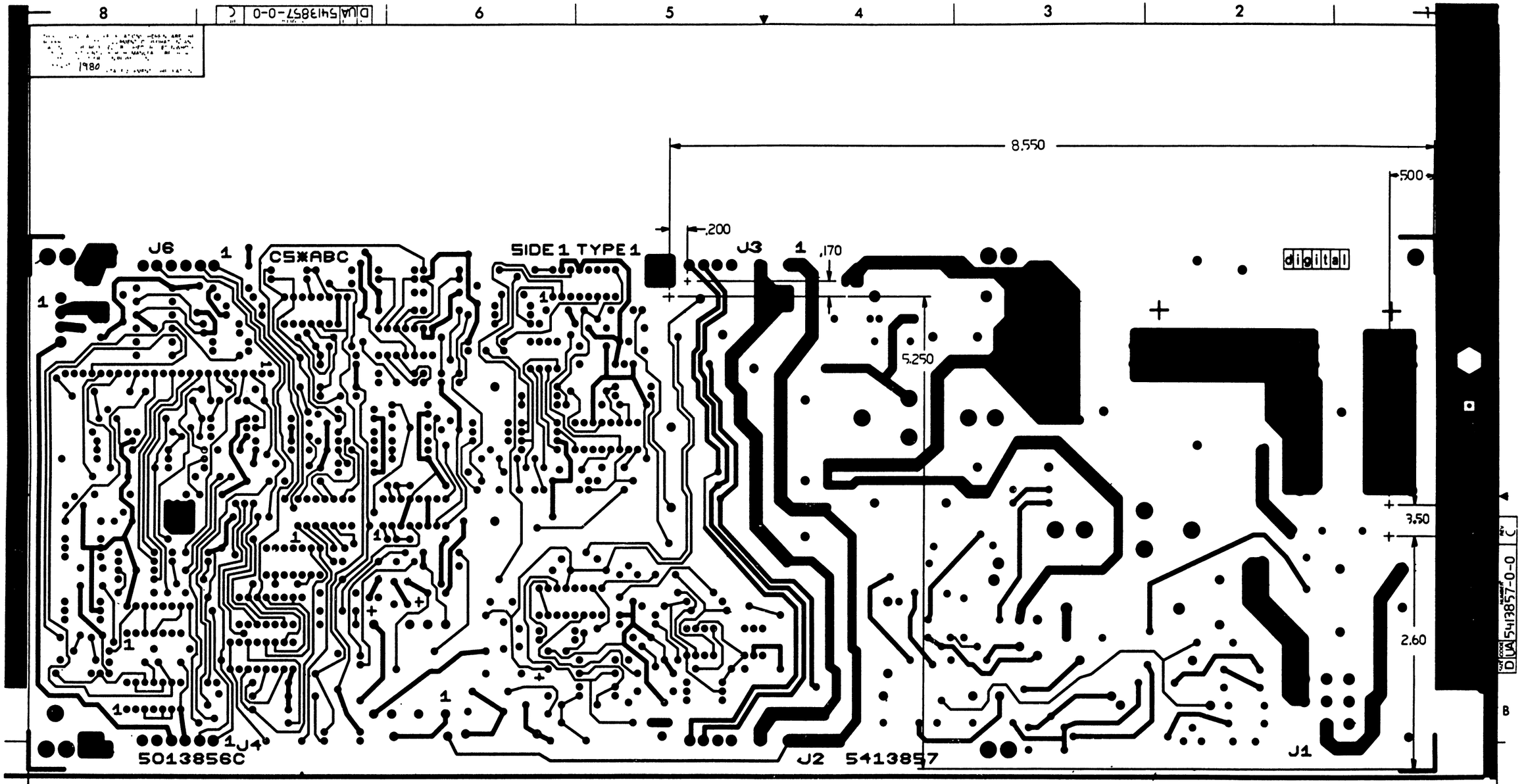

U/L APPVL REQD

DIMESIONAL TOLERANCE, INCHES .XXX= ±.020

REVISION HISTORY		
DATE	ECO NUMBER	REV

TITLE: H7200 MAJOR BOARD

DOCUMENT NUMBER			
SIZE	CODE	NUMBER	REV
D	UA	5413857-0-0	C

SCALE 2/1 SHEET 2 OF 3

"THIS DRAWING AND SPECIFICATIONS, HEREIN, ARE THE PROPERTY OF DIGITAL EQUIPMENT CORPORATION AND SHALL NOT BE REPRODUCED OR COPIED OR USED IN WHOLE OR IN PART AS THE BASIS FOR THE MANUFACTURE OR SALE OF ITEMS WITHOUT WRITTEN PERMISSION.
COPYRIGHT © 1980 DIGITAL EQUIPMENT CORPORATION"

WIRE ADDS

0-1 FROM FEED THRU RIGHT SIDE OF R70 TO FEED THRU BELOW R8 USING ITEM 106

0-2 FROM FEED THRU BELOW E11-2 TO FEED THRU NEAR E9-1 USING ITEM 124

0-3 FROM FEED THRU BELOW E11-4 TO FEED THRU BELOW E9-1 USING ITEM 124

0-10 FROM FEED THRU ABOVE R117, TO FEED THRU RIGHT SIDE E10 PIN 8 USING ITEM 124.

COMPONENT ADDS

0-4 C5 (.01 UF) IN PARALLEL WITH R86

0-5 C6 (.1 UF) FROM ETCH AT C44 TO FEED THRU NEAR E 14/8

0-6 R9 (270, 1/4 W) FROM LEFT TERMINAL OF D26 TO RIGHT TERMINAL OF R58

0-7 R45 (30 1/4 W) FROM E6/5 TO E6/7; USE EYELETS (ITEM 149) AND WIRES (ITEM 124)
NOTE: EYELETS MUST BE 3/16 IN MINIMUM FROM ETCHES AT R62, R59

WIRE ADDS

1-1 FROM E6-5 TO LOWER END OF R45 USING ITEM 124.

1-2 FROM E6-7 TO UPPER END OF R45 USING ITEM 124.

1-3 FROM PTH AT LEFT OF D1 TO PTH ABOVE D1 USING ITEM 154.

COMPONENT DELETIONS

1-4 REMOVE R1, DEC # 1314270-02.

1-5 REMOVE R2, DEC # 1314270-02.

1-6 REMOVE R45, DEC # 1302751-00.

1-7 REMOVE D32, DEC # 1105275-00.

COMPONENT ADDS

1-8 INSTALL R1, DEC # 1314270-02, BY DRILLING TWO .055" HOLES ABOVE D1. SEE SHT 2 OF UA FOR LOCATION. USE SPACERS ON LEADS. (ITEM 144).

1-9 INSTALL R2, DEC # 1314270-02, USING SPACERS ON THE LEADS (ITEM 144). INSERT ONE LEAD INTO PTH NEAR ETCH CUT TO THE RIGHT OF R4. TACK SOLDER THE OTHER LEAD TO THE ETCH ON THE OTHER SIDE OF THE ETCH CUT.

1-10 INSTALL R45, DEC # 1302751-00, BY DRILLING TWO .055" NEAR J3. SEE SHT. 2 OF UA FOR LOCATION. INSTALL EYELETS (ITEM 149) IN THESE HOLES. MOUNT R44 VERTICLE WITH SLEEVING (ITEM 155) ON LEAD. SEE VIEW B-B ON SHT. 1 OF UA.

1-11 CONNECT ANODE OF D32 TO CATHODE OF D35, BOTH DEC # 1105275-00, BY TWISTING LEADS, SOLDERING AND TRIMMING EXCESS, INSTALL SHORT PIECE OF ITEM 155 ON THE OTHER TWO LEADS AND INSERT AS ONE COMPONENT IN LOCATION SHOWN, (BELOW D33), WITH D35 ON THE LEFT AND D32 ON THE RIGHT. SEE VIEW C-C ON SHT. 1 OF UA.

NOTE: ECO 5413857-TW001 ALSO CHANGES THE VALUE OF R44, R49, R50, R56, R62, R64, R65, R86, R140, C29, C30 AND D31. SEE REV B PARTS LIST OR ECO IF MORE INFORMATION IS NEEDED.

ECO # 2

COMPONENT DELETIONS SIDE 1

2-1 DELETE C5 DEC # 1001610-00.

2-2 DELETE D28 DEC # 1117992-00.

COMPONENT ADDS SIDE 1

2-3 ADD D28 DEC # 1117992-01

2-4 ADD R145 DEC # 1311996-01 AND TO BOTH LEADS ADD SPACERS (ITEM 144) DEC # 9009798-00 INSERT ONE LEAD IN PTH RIGHT OF R2 AND TACK SOLDER REMAINING LEAD TO ETCH UNDER AND NEAR LEFT SIDE OF R3.

2-5 ADD R144, DEC # 1302751-00 AND C53 DEC # 1010978-36 BY TWISTING AND SOLDERING ONE LEAD FROM EACH COMPONENT TOGETHER (CLIP OFF EXCESS LEAD) TACK SOLDER LEAD OF R144 TO ETCH LEADING TO E8-8 AND TACK SOLDER LEAD OF C53 TO ETCH BETWEEN R44 AND C23.

WIRE ADD SIDE 1

2-6 FROM PTH BELOW AND BETWEEN R2 AND R145 TO ETCH NEXT TO PTH LOCATED TO THE LEFT OF D1 (TACK SOLDER) USE ITEM 154.

REVISION HISTORY		
DATE	ECO NUMBER	REV

TITLE: H7200 MAJOR BD

DOCUMENT NUMBER: SIZE D | CODE UA | NUMBER 5413857-0-0 | REV C

SCALE | SHEET 3 OF 3

AUTOMATED BY PRTLST.3P(44) — P A R T S L I S T — SHEET A1 OF A4

LINE	ITEM	DOCUMENT NUMBER	PART NUMBER	DESCRIPTION	QTY PER VARIATION 00	REFERENCE DESIGNATOR
1	1	D-MD-5013856-0-0	5013856-00	DRILL + ETCH BRD	1	
2	2		1000012-00	56.0 MMF 100V 5%200PPM MICA	1	C15
3	3		1013466-06	100.0 MMF 50V 5% CER	3	C25,C44,C47
4	4		1010978-24	.01 MFD 50V 10% CER	1	C46
5	5		1001765-00	.005 MFD 100V 20% Z5T DISC	4	C9,C13,C16,C19
6	6		1018000-00	2.2 MFD 63V +50-10 AL EL	2	C18,C22
7	7		1010274-00	.22 MFD 50V +80-20% Z5U CER	1	C21
8	8		1010978-36	.1 MFD 50V 10% CER	12	C14,C24,C34,C35,C40-C42,C45,C6,
					CONT	C51,C43,C17
9	9		1011847-01	.01 MFD 400V 10% POLYPROP	1	C36
10	10		1011847-03	.0047 MFD 600V 10% POLYPROP	2	C3,C4
11	11		1012784-00	.047 MFD 50V +80-20% CER	1	C10
12	12		1010274-02	1 MFD 50V +80-20% CER	1	C27
13	13		1015755-00	.047 MFD 270V 20% POLYPROP	1	C11
14	14		1000009-00	33.0 MMF 100V 5%200PPM MICA	1	C39
15	15		1014169-00	1000.0 MMF 100V 1%200PPM MICA	2	C23,C26
16	16		1011740-00	5600.0 MMF 50V 10% CER	2	C28,C50
17	17		1018000-01	15 MFD 25V +50-10 AL EL	2	C20,C33
18	18		1018001-00	100 MFD 20V 15% AL EL	1	C32
19	19		1000023-00	330.0 MMF 100V 5%200PPM MICA	1	C49
20	20		1011740-05	1000.0 MMF 50V 10% CER	1	C37
21	21		1000055-00	2200.0 MMF 250V 20% Y5S DISC	1	C48
22	22		1018929-00	330.0 MMF 1000V 5% 70PPM MIC	1	C30
23	23		1018001-01	15 MFD 60V 15 % AL EL	1	C31
24	24		1012783-00	.022 MFD 50V +80-20% CER	2	C12,C29
25	25		1012312-00	.47 MFD 50V +80-20% CER	1	C52
26	26		1117992-00	1N 5758 DIAC@20V BILATERAL TRIG	1	D28
27	27		1110968-00	2N 5062 SCR@100V I=.8A TO92	1	D29
28	28		1105275-00	D 672 TR= 15NS PIV= 60V SI	35	D18,D22-D27,D32,D33,D41-D65,D35
29	29		1112594-02	A115M PIV=600 I= 3A	2	D2,D3

REVISION HISTORY			BASIC PART NO: 5413857										
ENG	ECO NUMBER	REV	SECTION A OF A	DRN: J. FERGUSON	DATE: 16-NOV-81		D	I	G	I	T	A	L
---	INITIAL	B	SECTION.VARIATION INDEX [A] 00 [B] [C] [D] [E] [F] [H] [J] [K] [L] [M] [N]	CHK'D: K. SHEYTANIAN	DATE: 16-NOV-81	TITLE PARTS LIST							
				DES.ENG: C. LANDINO	DATE: 16-NOV-81	H7200 MAJOR BOARD							
				RESP.ENG.: C. LANDINO	DATE: 16-NOV-81	DOCUMENT NUMBER							
				MFG.ENG.: H. ORTIZ	DATE: 16-NOV-81	SIZE: K	CODE: PL	NUMBER: 5413857-0-DBP				REV: B	
				ASSEMBLY NUMBER: D-UA-5413857-0-0	TOP DOCUMENT NUMBER: B-DD-5413857-0-0			FILE NAME: Z13108.PLS				EDIT #: 6	

"THIS DRAWING AND SPECIFICATIONS HEREIN, ARE THE PROPERTY OF DIGITAL EQUIPMENT CORPORATION AND SHALL NOT BE REPRODUCED OR COPIED OR USED IN WHOLE OR IN PART AS THE BASIS FOR THE MANUFACTURE OR SALE OF ITEMS WITHOUT WRITTEN PERMISSION.
COPYRIGHT (C) 1981. DIGITAL EQUIPMENT CORPORATION "

AUTOMATED BY PRTLST.3P(44) — P A R T S L I S T — SHEET A2 OF A4

LINE	ITEM	DOCUMENT NUMBER	PART NUMBER	DESCRIPTION	QTY PER VARIATION 00	REFERENCE DESIGNATOR
30	30		1112595-01	A114B PIV=200 I= 1A	11	D14-D16,D19-D21,D34,D37-D40
31	31		1114245-00	NBS30600LPIV=600 I=30A	1	D1
32	32		1112595-02	A114M PIV=600 I= 1A	4	D8,D9,D13,D30
33	33		1117061-00	MCR 69-1 THYRISTOR	1	D17
34	34		1105796-01	5796-1PIV=400 I=1A D041	4	D4-D7
35	35		1110994-00	1N 751A VZ= 5.1 5% .40W	1	D68
36	36		1100113-00	D 662 OS 600PCB(STABISTOR)	2	D66,D67
37	37		1212297-02	MATE-N-LOK 9PIN UNIV HEADER	1	J1
38	38		1218241-00	HEADER.156 8PIN KEYED	2	J2,J3
39	39		1216122-08	HEADER.156 6POS KEYED	2	J4,J6
40	40		1212518-04	HEADER.100 24POS STRAIGHT	1	J5
41	41		1214789-00	INSERT,THREADED 6-32 ,BRASS,ELEC	4	
42	42		1217304-00	HEAT SINK,W/NON-THREADED INSERT	2	
43	43		1216122-00	HEADER.156 4POS KEYED	1	J7
44	44		1214809-01	INSERT,W/O INTERNAL THREADS,THRU	4	
45	45		1214809-03	INSERT,W/O INTERNAL THREADS,THRU	3	
46	46		1300202-00	47.0 .25 W 5.0 % CC	5	R35,R36,R74,R62,R140
47	47		1300229-00	100.0 .25 W 5.0 % CC	2	R58,R104
48	48		1311337-00	56.0 5.0 W 5.0 % WW	1	R11
49	49		1300288-00	270.0 2.0 W10.0 % CC	1	R13
50	50		1300365-00	1.0 K .25 W 5.0 % CC	4	R18,R25,R47,R119
51	51		1313469-00	240.0 .25 W 5.0 % CC	1	R29
52	52		1303313-00	12.10 K .25 W 1.0 % RN55D-F10	2	R26,R46
53	53		1300447-00	4.70 K .25 W 5.0 % CC	5	R40,R96,R116,R120,R126
54	54		1300479-00	10.0 K .25 W 5.0 % CC	8	R87,R117,R123,R127,R133,R134,
					CONT	R136,R71
55	55		1300496-00	15.0 K .25 W 5.0 % CC	4	R41,R118,R125,R142
56	56		1301317-00	10.0 .25 W 5.0 % CC	2	R19,R20
57	57		1301422-00	7.50 K .25 W 5.0 % CC	3	R38,R138,R73
58	58		1301775-00	820.0 .25 W 5.0 % CC	3	R30,R97,R121
59	59		1302466-00	100.0 K .25 W 5.0 % CC	3	R124,R128,R130
60	60		1300277-00	220.0 1.0 W10.0 % CC	1	R61
61	61		1302612-00	1.78 K .25 W 1.0 % RN55D-F10	1	R84
62	62		1302177-00	47.0 K .25 W 5.0 % CC	10	R37,R89,R90,R105-R107,R111-R113,
					CONT	R131
63	63		1302377-00	39.0 .25 W 5.0 % CC	1	R31
64	64		1302398-00	470.0 K .25 W 5.0 % CC	2	R93,R108
65	65		1302514-00	39.0 K .25 W 5.0 % CC	1	R39
66	66		1302645-00	1.10 K .25 W 1.0 % RN55D-F10	1	R34
67	67		1303114-00	1.0 K .25 W 1.0 % RN55D-F10	7	R16,R21-R24,R33,R57
68	68	BLANK		*** THIS ITEM IS NOT USED ***	-	
69	69		1313476-00	51.10 K .25 W 1.0 % RN55D-F10	1	R85
70	70		1305516-00	128.0 K .25 W .10% RN55E-B 2	1	R80
71	71		1309963-00	260.0 5.0 W 3.0 % WW	2	R7,R8
72	72		1312546-00	16.50 K .25 W 1.0 % RN55D-F10	1	R75
73	73		1312932-00	36.0 K .25 W 5.0 % CC	2	R42,R122
74	74		1311320-00	90.90 K .25 W 1.0 % RN55D-F10	1	R48
75	75		1313752-00	15.0 K .25 W 1.0 % RN55D-F10	1	R86

D	I	G	I	T	A	L	TITLE	SECTION	SIZE	CODE	DOCUMENT NUMBER	REV
							H7200 MAJOR BOARD	A OF A	K	PL	5413857-0-DBP	B

AUTOMATED BY PRTLST.3P(44) — P A R T S L I S T — SHEET A3 OF A4

LINE	ITEM	DOCUMENT NUMBER	PART NUMBER	DESCRIPTION	QTY PER VARIATION 00	REFERENCE DESIGNATOR
76	76		1314088-00	20.0 K 5.0 W 5.0 % WW	2	R3,R4
77	77		1316444-00	150.0 K .25 W 1.0 % RN55D-F10	1	R77
78	78		1314350-00	1.0 2.0 W10.0 % FUSE	2	R5,R6
79	79		1303110-00	19.60 .25 W 1.0 % RN55D-F10	1	R28
80	80		9006656-00	WASHER, FLAT, .312 O.D. X .156 I	2	
81	81		1300255-00	150.0 1.0 W 5.0 % CC	1	R32
82	82		1300488-00	12.0 K .25 W 5.0 % CC	2	R67,R91
83	83		1300417-00	2.20 K .25 W 5.0 % CC	3	R94,R95,R141
84	84		1301320-00	1.20 K .25 W 5.0 % CC	1	R43
85	85		1311522-00	200.0 .25 W 5.0 % CC	2	R17,R88
86	86		1314119-00	44.20 K .25 W 1.0 % RN55D-F10	1	R78
87	87		1313596-00	20.0 K .25 W 1.0 % RN55D-F10	1	R51
88	88		1301972-00	270.0 .25 W 5.0 % CC	2	R137,R9
89	89		1305346-00	27.0 K .25 W 5.0 % CC	8	R98-R103,R109,R110
90	90		1314649-00	430.0 K .25 W 5.0 % CC	1	R115
91	91		1317522-00	1.0 .25 W 5.0 % CC	1	R76
92	92		1300439-00	3.30 K .25 W 5.0 % CC	1	R27
93	93		1300271-00	220.0 .25 W 5.0 % CC	3	R14,R132,R143
94	94		1314270-02	2.50 15.0 % NTC THERM	2	R1,R2
95	95		1303155-00	21.50 K .25 W 1.0 % RN55D-F10	2	R79,R44
96	96		1317968-00	150.0 K 2.0 W 5.0 % CC	1	R59
97	97		1300368-00	1.0 K 1.0 W 5.0 % CC	1	R60
98	98		1317595-00	270.0 K 1.0 W 5.0 % CC	1	R70
99	99		1315052-00	500.0 5.0 W 5.0 % WW	1	R63
100	100		1303312-00	10.0 K .25 W 1.0 % RN55D-F10	1	R53
101	101		1314252-00	130.0 K .25 W 1.0 % RN55D-F10	1	R52
102	102		1312682-00	3.0 3.0 W 5.0 % WW	1	R12
103	103		1315518-02	10.0 1.0 W10.0 % FUSE	1	R49
104	104		1314990-00	158.0 K .25 W 1.0 % RN55D-F10	1	R114
105	105		1313589-00	1.40 K .25 W 1.0 % RN55D-F10	1	R15
106	106		9107688-55	WIRE(WRAP)24AWG UL1327	A/R	
107	107		1302388-00	2.0 K .25 W 5.0 % CC	1	R92
108	108		1301969-00	22.0 .25 W 5.0 % CC	1	R135
109	109		1302751-00	30.0 .25 W 5.0 % CC	1	R45
110	110		1304841-00	75.0 K .25 W 5.0 % CC	1	R139
111	111		1301423-00	6.80 K .25 W 5.0 % CC	1	R66
112	112		1302394-00	30.0 K .25 W 5.0 % CC	1	R68
113	113		1303045-00	3.16 K .25 W 1.0 % RN55D-F10	1	R82
114	114		1302859-00	5.76 K .25 W 1.0 % RN55D-F10	1	R56
115	115		1303044-00	100.0 K .25 W 1.0 % RN55D-F10	1	R83
116	116		1309414-00	9.76 K .25 W 1.0 % RN55D-F10	1	R81
117	117		1510705-00	XA 05 NPN 500MW SI 60 50 P	6	Q4-Q6,Q8,Q11,Q18
118	118		1510706-00	XA 55 PNP 500MW SI 60 50 P	5	Q9,Q10,Q12,Q17,Q19
119	119		1511686-01	FET N 350MW TO-92	3	Q13,Q14,Q16
120	120		1517365-00	2N 6678 NPN 175W SI	2	Q1,Q2
121	121		1512790-00	D 44C12 NPN 30W SI	1	Q3
122	122		1517551-00	J 176 FET 350MW SI P CHNNL	1	Q15
123	123		1516119-00	NPN 75W SI	1	Q7

DIGITAL	TITLE	SECTION A OF A	SIZE	CODE	DOCUMENT NUMBER	REV
	H7200 MAJOR BOARD		K	PL	5413857-0-DBP	B

AUTOMATED BY PRTLST.3P(44) — P A R T S L I S T — SHEET A4 OF A4

LINE	ITEM	DOCUMENT NUMBER	PART NUMBER	DESCRIPTION	QTY PER VARIATION 00	REFERENCE DESIGNATOR
124	124		9105740-55	WIRE(WRAP)30AWG UL1423	A/R	
125	125		1617557-00	XFMR,CURRENT RATIO 1:2:100 PC MT	1	T3
126	126		1617450-00	PULSE XFMR,RATIO 40:3,3:1	1	T2
127	127		9010265-00	SPACER,INT.THD, 6-32X .187	6	
128	128		1911944-00	555CN TIMER,FUNCT.BLOCK	1	E5
129	129		1912107-00	324 OP AMP,QUAD	1	E8
130	130		1912108-00	339 VOLT CMPRTR,QUAD	1	E13
131	131		1914194-00	OPTP-COUPLED ISOLATOR	1	E1
132	132		1916819-00	3527A MODULATOR,REGULATING	1	E6
133	133		1917059-00	3543 P.S. SUPERVISORY CIR	1	E4
134	134		1914156-00	LM 393 VOLT.COMPARATOR DUAL	1	E2
135	135		1916820-00	SG3525J MODULATOR-REGULATING	1	E3
136	136		2113635-00	4071B OR GATE-QUAD 2IN CMO	1	E11
137	137		2113637-00	4073B AND GATE-TRIPLE 3IN	1	E12
138	138		2113612-00	4019B AND-OR SELECT GATE-Q	1	E9
139	139		2113645-00	4098B MULTIVIBRATOR,DUAL M	1	E7
140	140		2113644-00	4093B NAND GATE-QUAD 2IN C	2	E14,E15
141	141		2113615-00	4025UBNOR GATE-TRIPLE 3IN	1	E10
142	142		9009676-00	TERM,SOLDER BARRIER STR	2	
143	143		9007793-01	SCREW,PAN,PHIL 6-32X 9/16 SS	4	
144	144		9009798-00	SPACER, CERAMIC, .186 ODX.078 ID	4	
145	145		9009798-01	SPACER, CERAMIC, .186 ODX.078 ID	12	
146	146		9007801-00	WASHER, LOCK, S.S. #6	4	
147	147		9008268-00	COMPOUND, THERMAL JOINT	A/R	
148	148		1001610-00	.01 MFD 50V +80-20% Z5U CER	1	C5
149	149		9006731-00	EYELET, (BRASS NICKEL PLATED) .0	2	
150	150		1300521-00	47.50 K .25 W 1.0 % RN55D-F10	1	R50
151	151		1302379-00	75.0 .25 W 5.0 % CC	1	R64
152	152		1318864-00	1.0 1.0 W 5.0 % WW	1	R65
153	153		1115112-00	PIV=800V I=1A	1	D31
154	154		9107696-00	WIRE,SOLID,18AWG,IPVC UL1429	A/R	
155	155		9107256-11	TUBING,THIN WALL,.027ID UL	A/R	

156 NOTE: ITEM #124; .82' IS USED
157 NOTE: ITEM #106; .33' IS USED
158 NOTE: ITEM #154; .11' IS USED
159 NOTE: ITEM #155; .07' IS USED

D	I	G	I	T	A	L	TITLE	SECTION A OF A
							H7200 MAJOR BOARD	

SIZE	CODE	DOCUMENT NUMBER	REV
K	PL	5413857-0-DBP	B

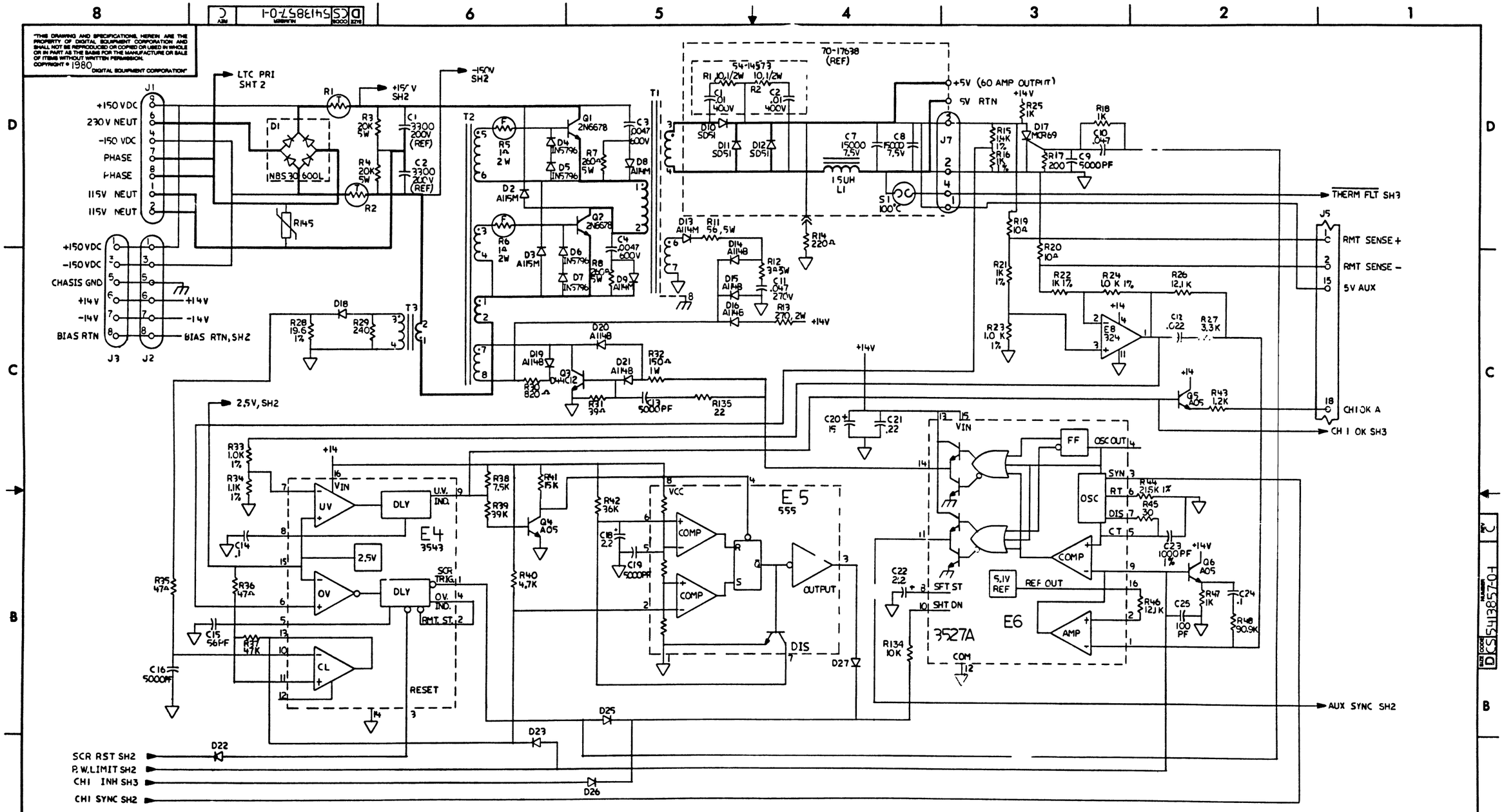

NOTES: 1. UNLESS OTHERWISE SPECIFIED ALL DIODES ARE D672.

2. ALL CAPACITOR VALUES ARE IN MICROFARADS. ALL RESISTOR VALUES ARE IN OHMS.

DRN. F. GUNDERSEN	DATE 6-2-80	TITLE	digital
CHK'D. [signature]	DATE 12-23-80	MAJOR BOARD H7200	
DES. ENG. C S Landino	DATE 2/18/81		
REF. ENG. C S Landino	DATE 2/18/81	DOCUMENT NUMBER	
MFG. ENG. [signature]	DATE 2-18-81	SIZE D CODE CS NUMBER 5413857-0-1	REV C
NEXT HIGHER DOC. D-UA-5413857-0-0		SCALE	SHEET 1 OF 3

REVISION HISTORY

DATE	ECO NUMBER	REV
7/8	5413857-TW001	B
12-NOV-81	C. LANDINO	
12-16-81	5413857-TW002	C
12-FEB-82	C. LANDINO	
5/4/82		

DRG 1082

D CS 5413857-0-1 REV C

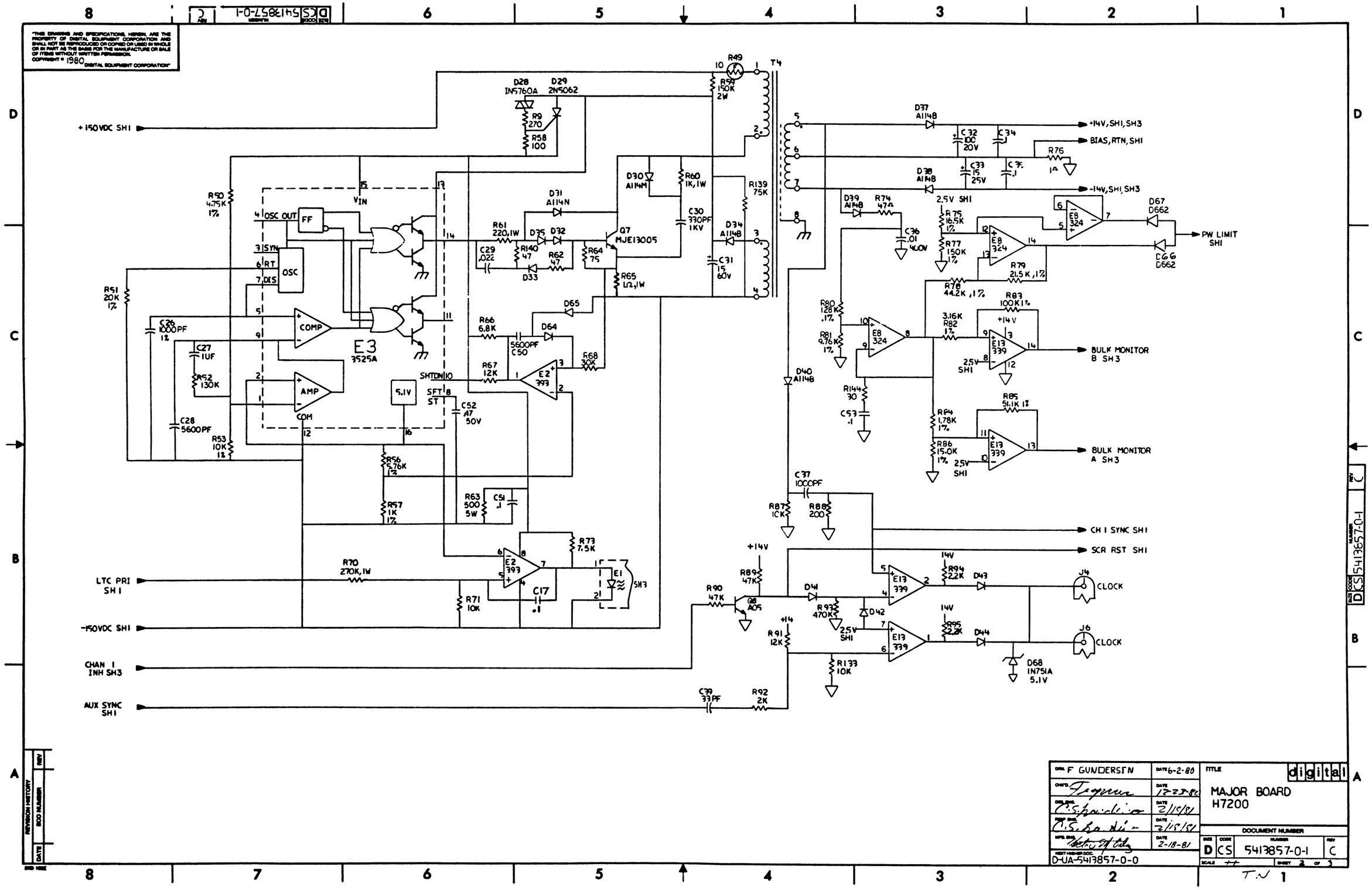

"THIS DRAWING AND SPECIFICATIONS, HEREIN, ARE THE PROPERTY OF DIGITAL EQUIPMENT CORPORATION AND SHALL NOT BE REPRODUCED OR COPIED OR USED IN WHOLE OR IN PART AS THE BASIS FOR THE MANUFACTURE OR SALE OF ITEMS WITHOUT WRITTEN PERMISSION.
COPYRIGHT © 1980 DIGITAL EQUIPMENT CORPORATION"
+150VDC SH1
-150VDC SH1
LTC PRI SH1
CHAN 1 INH SH3
AUX SYNC SH1
+14V,SH1,SH3
BIAS,RTN,SH1
-14V,SH1,SH3
PW LIMIT SH1
BULK MONITOR B SH3
BULK MONITOR A SH3
CH 1 SYNC SH1
SCR RST SH1
CLOCK
CLOCK
E3 3525A
Q7 MJE13005
Q8 A05
T4
D28 IN5760A
D29 2N5062
D37 A114B
D38 A114B
D39 A114B
D40 A114B
D68 IN751A 5.1V
J4
J6
D67 D662
D66 D662
D68 IN751A 5.1V
D-UA-5413857-0-0
DRN. F GUNDERSEN
DATE 6-2-80
DATE 12-23-80
DATE 2/15/81
DATE 2/15/81
DATE 2-18-81
TITLE
digital
MAJOR BOARD
H7200
DOCUMENT NUMBER
SIZE D
CODE CS
NUMBER 5413857-0-1
REV C
SCALE ++
SHEET 2 OF 3
T.N

"THIS DRAWING AND SPECIFICATIONS, HEREIN, ARE THE PROPERTY OF DIGITAL EQUIPMENT CORPORATION AND SHALL NOT BE REPRODUCED OR COPIED OR USED IN WHOLE OR IN PART AS THE BASIS FOR THE MANUFACTURE OR SALE OF ITEMS WITHOUT WRITTEN PERMISSION.
COPYRIGHT © 1980 DIGITAL EQUIPMENT CORPORATION"

BULK MONITOR B SH2
BULK MONITOR A SH2
MOD EN
P.S.RTN
PWR.REQ.
SHTDN
STBY
BUS RTN
CH 1 OK SH1
THERMAL SHUTDOWN L
CH 2 OK
THERMAL SHUTDOWN L
CH 3 OK
THERM FLT SH1
AIR FLT
AIR FLT PULL UP
STBY SELECT
CH 1 STBY
CH 2 STBY
CH 3 STBY
J5
J6
J4
START SHTDN SEQ
KEY OFF
RESET
SET
LATCH
STBY
SHT DN
SELECTABLE GATE
E9
OUTPUTS OK
STBY OUTPUTS OK
LTC
BAT REQ.
AC.LOW
SIG RTN
DC.LOW
J5
BOOT EN.
BAT EN.
CH 1 INH SH1, SH2
FREQ SHIFT
CH 2 INH
CH 3 INH
FREQ SHIFT

#	TYPE	+14V	COM
E11	4071B	14	7
E12	4073B	14	7
E9	4019B	16	8
E7	4098B	16	8
E15	4093B	14	7
E14	4093B	14	7
E10	4025UB	14	7

DRWN	F GUNDERSEN	DATE	6-6-80
CHKD		DATE	12-23-80
ENG SUPV		DATE	2/19/81
PROJ SUPV		DATE	2/19/81
MFG SUPV		DATE	2-18-81
NEXT HIGHER DWG	D-UA-5413857-0-0		

TITLE: MAJOR BOARD H7200

DOCUMENT NUMBER: SIZE D | CODE CS | 5413857-01 | REV C

SCALE | SHEET 3 OF 3

TW 1

5413857-01 C

REVISION HISTORY: REV | ECO NUMBER | DATE

5413857-0-1 C

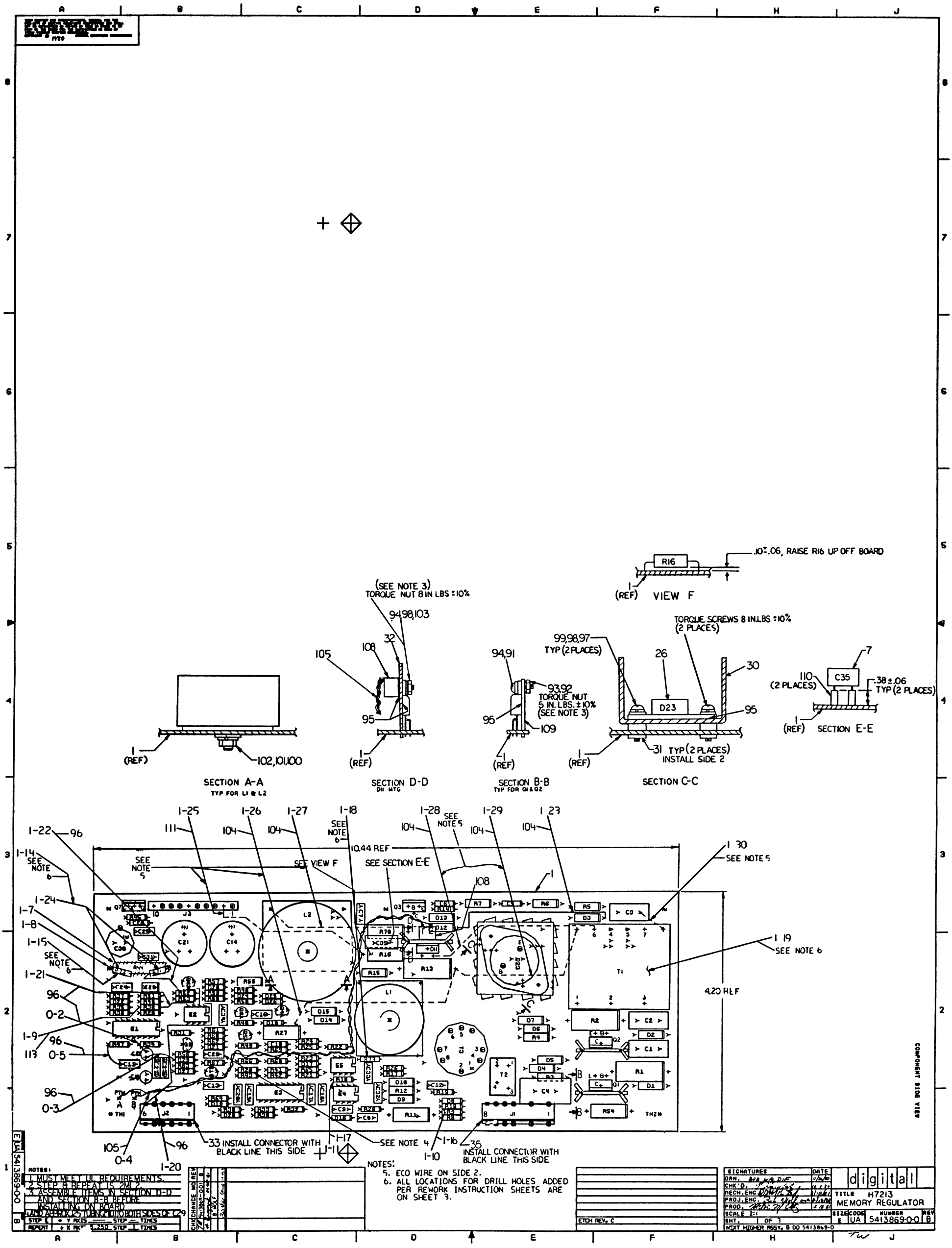

NOTES:
1. MUST MEET UL REQUIREMENTS.
2. STEP B REPEAT IS 2MIL.
3. ASSEMBLE ITEMS IN SECTION D-D AND SECTION B-B BEFORE INSTALLING ON BOARD.
4. ADD APPROX 25 TURNS TOTAL TO BOTH SIDES OF C29
5. ECO WIRE ON SIDE 2.
6. ALL LOCATIONS FOR DRILL HOLES ADDED PER REWORK INSTRUCTION SHEETS ARE ON SHEET 3.

SIGNATURES	DATE
DRN.	11/4/80
CHK'D.	11/11/80
MECH. ENG	11/18/80
PROJ. ENG.	11/18/80
PROD.	12/8/80
SCALE 2:1	
SHT. 1 OF 3	
NEXT HIGHER ASSY. B 00 5413869-00	

digital

TITLE H7213 MEMORY REGULATOR

SIZE E | CODE UA | NUMBER 5413869-00 | REV B

ETCH REV. C

CHG/CHANGE NO. REV

EUA 5413869-00 B

THE DRAWING AND SPECIFICATIONS HEREIN ARE THE PROPERTY OF DIGITAL EQUIPMENT CORPORATION AND SHALL NOT BE REPRODUCED OR COPIED OR USED IN WHOLE OR IN PART AS THE BASIS FOR THE MANUFACTURE OR SALE OF ITEMS WITHOUT WRITTEN PERMISSION.
1980

10.440 F.B.S.

8.925 REF.

.900 REF.

4.750±.010

.400±.010

±.010
.300

±.010
.300

.675±.010

.200±.010

UL APPVL REQ

1 5013868C

CSXABCDEF

J3

SIDE 1

digital

4.200
F.B.S.

±.010
2.725

±.010
1.240

5413869

J2 1

1 J1

TYPE 1

±.010
3.550

H7213
MEMORY REGULATOR

REWORK INSTRUCTIONS

WIRE ADDS SIDE 1:

0-2 ADD ITEM 96 FROM E1 PIN 12 TO C22(-).
0-3 ADD ITEM 96 FROM C22(+) TO D29 ANODE.
0-4 ADD ITEM 105 FROM ITEM 108 PIN 1 TO PTH A (RED WIRE), CONNECT BLACK WIRE FROM PIN 2 ITEM 108 TO PTH B.
0-5 ADD ITEM 96 FROM R47 TO C11.

ECO # 1

COMPONENT DELETES SIDE 1

1-7 DELETE R44 DEC# 1309094-00.
1-8 DELETE CERAMIC SPACERS DEC# 9009798-01.
1-9 DELETE R38 DEC# 1303047-00.
1-10 DELETE R9 DEC# 1302602-00.
1-11 DELETE R18 DEC# 1309416-00.
1-12 DELETE T1 DEC# 1617439-00.

COMPONENT ADDS SIDE 1

1-13 ADD R38 DEC# 1316836-00.
1-14 DRILL ONE .042" HOLE AND ADD R71 DEC# 1305324-00.
1-15 DRILL ONE .042" HOLE AND ADD R72 DEC# 1303114-00.
1-16 ADD R9 DEC# 1300202-00.
1-17 ADD R18 DEC# 1311594-00.
1-18 DRILL TWO .042" HOLES AND ADD R73 DEC# 1311594-00. ON SIDE 2 TACK SOLDER R73 FROM ETCH RUN BETWEEN C33 AND E5-4 TO R26. (SIDE CONNECTED TO C32)
1-19 DRILL TWO .055" HOLES AND ADD T1 DEC# 1618879-00.

WIRE ADDS SIDE 1

1-20 ADD ITEM 96 FROM E2-1 TO J2-6.
1-21 ADD ITEM 96 FROM E2-3 TO R38.
1-22 ADD ITEM 96 FROM E2-2 TO R71. (WRAP AND SOLDER TO COMPONENT LEAD)
1-23 ADD ITEM 104 FROM D12/CATHODE TO D31/CATHODE.

WIRE ADDS SIDE 2

1-24 JUMPER R72 TO R71 (USE COMPONENT LEADS)
1-25 ADD ITEM 111 FROM J3-2 TO R16. (TACK SOLDER BOTH SIDES TO ETCH)
1-26 ADD ITEM 104 FROM PTH ABOVE R27 TO R13. (TACK SOLDER TO ETCH)
1-27 ADD ITEM 104 FROM L2 (SIDE CONNECTED TO C14/NEG) TO D12/ANODE. (TACK SOLDER BOTH SIDES TO ETCH)
1-28 ADD ITEM 104 FROM D11/ANODE TO T1-6. (TACK SOLDER BOTH SIDES TO ETCH)
1-29 ADD ITEM 104 FROM R13 (TACK SOLDER TO ETCH) TO T1-8. (WRAP AND SOLDER TO COMPONENT LEAD)
1-30 ADD ITEM 104 FROM C3 (TACK SOLDER TO ETCH) TO T1-9. (WRAP AND SOLDER TO COMPONENT LEAD)

REVISION HISTORY

DATE	ECO NUMBER	REV

TITLE H7213 MEMORY REGULATOR

DOCUMENT NUMBER: E UA5413869-0-0 B

SCALE 1/1 SHEET 3 OF 3

AUTOMATED BY PRTLST.3P(44) — P A R T S L I S T — SHEET A1 OF A3

LINE	ITEM	DOCUMENT NUMBER	PART NUMBER	DESCRIPTION	QTY PER VARIATION 00	REFERENCE DESIGNATOR
1	1	D-MD-5013868-0-0	5013868-00	DRILL AND ETCH	1	
2	2		1000018-00	120.0 MMF 100V 5%200PPM MICA	3	C18-C20
3	3		1012607-00	560 MFD 20V+100-10% AL EL	1	C30
4	4		1001610-00	.01 MFD 50V +80-20% 25U CER	3	C5,C6,C26
5	5		1010274-00	.22 MFD 50V +80-20% Z5U CER	6	C8,C9,C11,C17,C33,C34
6	6		1010978-36	.1 MFD 50V 10% CER	2	C25,C31
7	7		1011847-01	.01 MFD 400V 10% POLYPROP	2	C3,C35
8	8		1000016-00	100.0 MMF 100V 5%200PPM MICA	1	C12
9	9		1014169-00	1000.0 MMF 100V 1%200PPM MICA	1	C23
10	10		1010978-24	.01 MFD 50V 10% CER	1	C29
11	11		1014277-00	3800 MFD 6.3V +75-10% AL EL	2	C14,C21
12	12		1017426-00	2700.0 MMF 250V 10% POLYPROP	2	C1,C2
13	13		1000042-00	1000.0 MMF 100V 5%200PPM MICA	2	C7,C24
14	14		1015573-01	5600.0 MMF 50V 5% CER	1	C10
15	15		1011847-02	.01 MFD 600V 10% POLYPROP	1	C4
16	16		1000020-00	180.0 MMF 100V 5%200PPM MICA	1	C16
17	17		1010978-32	.047 MFD 50V 10% CER	1	C13
18	18		1018000-00	2.2 MFD 63V +50-10 AL EL	1	C22
19	19		1018000-01	15 MFD 25V +50-10 AL EL	1	C15
20	20		1000011-00	47.0 MMF 100V 5%200PPM MICA	1	C32
21	21		1105275-00	D 672 TR= 15NS PIV= 60V SI	11	D8,D17-D22,D24,D27-D29
22	22		1112595-01	A114B PIV=200 I= 1A	10	D1,D3,D4,D6,D7,D9,D10,D12,D14, CONT D15
23	23		1102495-00	VZ= 3.3 5% .25W	1	D16
24	24		1112595-02	A114M PIV=600 I= 1A	3	D2,D5,D13
25	25		1117555-00	UES2403 RECTIFIER 150V 3A TO220	1	D11
26	26		1116323-00	SD 241 PIV= 45 I=30A	1	D23
27	27		1109517-00	IN 9148 TR= 4NS PIV= 75V SY	1	D25
28	28		1110766-00	IN 5248B VZ= 18.0 5% .50W	1	D26
29	29		1117061-00	MCR 69-1 THYRISTOR	1	Q7

REVISION HISTORY			BASIC PART NO: 5413869										
ENG	ECO NUMBER	REV	SECTION A OF A	DRN: J.FERGUSON	DATE: 12-22-80		D	I	G	I	T	A	L
---	INITIAL	A	SECTION.VARIATION INDEX [A] 00	CHK'D: B.WALDIE	DATE: 12-22-80	TITLE PARTS LIST							
			[B]			H7213 MEMORY REGULATOR							
			[C]	DES.ENG: B.WOLF	DATE: 12-22-80								
			[D]			DOCUMENT NUMBER							
			[E]										
			[F]	RESP.ENG.: B.WOLF	DATE: 12-22-80	SIZE	CODE	NUMBER				REV	
			[H]										
			[J]										
			[K]	MFG.ENG.: H.ORTIZ	DATE: 12-22-80	K	PL	5413869-0-DBP				A	
			[L]										
			[M]	ASSEMBLY NUMBER:	TOP DOCUMENT NUMBER:	FILE NAME:						EDIT #	
			[N]	D-UA-5413869-0-0	B-DD-5413869-0-0	Z1311.PLS						9	

"THIS DRAWING AND SPECIFICATIONS HEREIN, ARE THE PROPERTY OF DIGITAL EQUIPMENT CORPORATION AND SHALL NOT BE REPRODUCED OR COPIED OR USED IN WHOLE OR IN PART AS THE BASIS FOR THE MANUFACTURE OR SALE OF ITEMS WITHOUT WRITTEN PERMISSION.
COPYRIGHT (C) 1981. DIGITAL EQUIPMENT CORPORATION "

LINE	ITEM	DOCUMENT NUMBER	PART NUMBER	DESCRIPTION	QTY PER VARIATION 00	REFERENCE DESIGNATOR
30	30		1216688-01	HEAT SINK, TO3	1	
31	31		1214789-00	INSERT,THREADED 6-32 ,BRASS,ELEC	2	
32	32		1215228-02	HEAT SINK,TO-220,#6 MTG HOLE	1	
33	33		1217990-04	HEADER.156 6SKT RCPT	1	J2
34	34		1216122-09	HEADER.156 10POS KEYED	1	J3
35	35		1217990-02	HEADER.156 8SKT RCPT	1	J1
36	36		1300229-00	100.0 .25 W 5.0 % CC	3	R36,R45,R64
37	37		1313347-00	220.0 1.0 W 5.0 % CC	1	R27
38	38		1309855-00	300.0 2.0 W 5.0 % CC	2	R1,R2
39	39		1300298-00	330.0 1.0 W10.0 % CC	1	R11
40	40		1300316-00	470.0 .25 W 5.0 % CC	3	R19,R30,R34
41	41		1300365-00	1.0 K .25 W 5.0 % CC	4	R28,R31,R49,R50
42	42		1300447-00	4.70 K .25 W 5.0 % CC	9	R10,R23,R29,R40,R46,R57,R62,R63, CONT R65
43	43		1300479-00	10.0 K .25 W 5.0 % CC	7	R51,R52,R56,R58,R61,R66,R67
44	44		1300168-00	10.0 .50 W 5.0 % CC	4	R5,R6,R7,R15
45	45		1302411-00	511.0 .25 W 1.0 % RN55D-F10	1	R37
46	46		1301320-00	1.20 K .25 W 5.0 % CC	1	R53
47	47		1302377-00	39.0 .25 W 5.0 % CC	1	R14
48	48		1300356-00	820.0 .50 W10.0 % CC	1	R12
49	49		1300257-00	150.0 2.0 W 5.0 % CC	1	R13
50	50		1303047-00	464.0 .25 W 1.0 % RN55D-F10	1	R38
51	51		1302957-00	121.0 .25 W 1.0 % RN55D-F10	1	R42
52	52		1303114-00	1.0 K .25 W 1.0 % RN55D-F10	2	R17,R26
53	53		1314492-00	40.20 K .25 W 1.0 % RN55D-F10	1	R35
54	54		1309444-00	2.70 .50 W10.0 % CC	2	R3,R4
55	55		1314551-00	442.0 .25 W 1.0 % RN55D-F10	2	R41,R43
56	56		1309094-00	100.0 5.0 W 5.0 % WW	1	R44
57	57		1302602-00	56.0 .25 W 5.0 % CC	1	R9
58	58		1303156-00	34.80 K .25 W 1.0 % RN55D-F10	1	R24
59	59		1313841-00	23.20 K .25 W 1.0 % RN55D-F10	1	R39
60	60		1302177-00	47.0 K .25 W 5.0 % CC	2	R47,R60
61	61		1302388-00	2.0 K .25 W 5.0 % CC	1	R20
62	62		1305324-00	4.99 K .25 W 1.0 % RN55D-F10	1	R25
63	63		1317515-00	.04 2.0 W 2.0 % WW	1	R16
64	64		1317522-00	1.0 .25 W 5.0 % CC	1	R8
65	65		1305346-00	27.0 K .25 W 5.0 % CC	2	R33,R68
66	66		1314350-00	1.0 2.0 W10.0 % FUSE	1	R54
67	67		1309416-00	31.60 K .25 W 1.0 % RN55D-F10	1	R18
68	68		1312565-00	13.30 K .25 W 1.0 % RN55D-F10	1	R21
69	69		1302466-00	100.0 K .25 W 5.0 % CC	1	R48
70	70		1302871-00	1.21 K .25 W 1.0 % RN55D-F10	1	R32
71	71		1316511-00	15.0 K .50 W 5.0 % CC	1	R55
72	72		1300398-00	1.80 K .25 W 5.0 % CC	1	R59
73	73		1312929-00	62.0 .25 W 5.0 % CC	1	R69
74	74		1300171-00	10.0 1.0 W 5.0 % CC	1	R70
75	75		1011683-00	.022 MFD 50V 10% CER	1	C28
76	76		1510705-00	XA 05 NPN 500MW SI 60 50 P	2	Q6,Q10

D	I	G	I	T	A	L	TITLE	SECTION	SIZE	CODE	DOCUMENT NUMBER	REV
							H7213 MEMORY REGULATOR	A OF A	K	PL	5413869-0-DBP	A

AUTOMATED BY PRTLST.3P(44) — P A R T S L I S T — SHEET A3 OF A3

LINE	ITEM	DOCUMENT NUMBER	PART NUMBER	DESCRIPTION	QTY PER VARIATION 00	REFERENCE DESIGNATOR
77	77		1509524-00	2N 3904 NPN 310MW SI 40 40 M	1	Q5
78	78		1513489-00	2N 4401 NPN 350MW SI 40 20	2	Q4,Q9
79	79		1512790-00	D 44C12 NPN 30W SI	1	Q3
80	80		1517060-00	MJE13009 NPN 100W SI	2	Q1,Q2
81	81		1513490-00	2N 4403 PNP 350MW SI-40 30	1	Q8
82	82		1617450-00	PULSE XFMR,RATIO 40:3,3:1	1	T3
83	83		1617439-00	XFMR P=360V S=25/62V	1	T1
84	84		1617557-00	XFMR,CURRENT RATIO 1:2:100 PC MT	1	T2
85	85		1617668-00	35.0 UH 20% 15A	1	L2
86	86		1617667-00	200.0 UH 2A	1	L1
87	87		1917908-00	LM 358N OP AMP DUAL LOW POWE	1	E4
88	88		1916819-00	SG3527J MODULATOR-REGULATING PUL	1	E1
89	89		1917059-00	3543 P.S. SUPERVISORY CIR	1	E3
90	90		1914156-00	LM 393 VOLT.COMPARATOR DUAL	2	E2,E5
91	91		9006010-01	SCREW,PAN,PHIL 4-40X 5/16 SS	2	
92	92		9006556-00	NUT,HEX ' 4-40X1/4 AF X 3/	2	
93	93		9006688-00	WASHER, LOCK, S.S. #4	2	
94	94		9009769-00	WASHER, RECTANGULAR .405X.225X.0	3	
95	95		9008268-00	COMPOUND, THERMAL JOINT	A/R	
96	96		9105740-55	WIRE(WRAP)30AWG UL1423	A/R	
97	97		9006024-01	SCREW,PAN,PHIL 6-32X 1/2 SS	2	
98	98		9007801-00	WASHER, LOCK, S.S. #6	3	
99	99		9006656-00	WASHER, FLAT, .312 O.D. X .156 I	2	
100	100		9009005-00	NUT,HEX ' 10-32 X1/4 AF X 3	2	
101	101		9007906-00	WASHER, LOCK S.S. #10	2	
102	102		9006664-00	WASHER, FLAT, .437 OD X .218 ID	2	
103	103		9008957-00	NUT,HEX 6-32X 1/4 AF X 3	1	
104	104		9009798-01	SPACER, CERAMIC, .186 ODX.078 ID	2	
105	105		9107430-02	WIRE,STRND,18AWG,IPVC (UL1429)	A/R	
106	106		1000021-00	220.0 MMF 100V 5%200PPM MICA	1	C27
107	107		1314951-00	390.0 K .25 W 5.0 % CC	1	R22
108	108		1218375-00	THERMOSTAT,O@170,C@220,NORM OPEN	1	
109	109		1215228-01	HEAT SINK,TO-220,SINGLE	2	
110	110		9107278-09	TUBING,THIN WALL,.042ID UL	A/R	

111 NOTE: ITEM NO 96 IS .17 FT.
112 NOTE: ITEM NO 105 IS .75 FT.
113 NOTE: ITEM NO 110 IS .10 FT.

D	I	G	I	T	A	L	TITLE	SECTION	SIZE	CODE	DOCUMENT NUMBER	REV
							H7213 MEMORY REGULATOR	A OF A	K	PL	5413869-0-DBP	A

"THIS DRAWING AND SPECIFICATIONS, HEREIN ARE THE PROPERTY OF DIGITAL EQUIPMENT CORPORATION AND SHALL NOT BE REPRODUCED OR COPIED OR USED IN WHOLE OR IN PART AS THE BASIS FOR THE MANUFACTURE OR SALE OF ITEMS WITHOUT WRITTEN PERMISSION.
COPYRIGHT ©1980 DIGITAL EQUIPMENT CORPORATION"

SIZE D | CODE DCS | NUMBER 5413869-0-1 | REV B

O.V. TRIP

150 V J1-1

R54 1Ω, 2W

C4 .01

CONTROL PULSE

SHIELD J1-5

−150 V J1-3

+14 V J1-6

−14 V J1-7

GND J1-8

R8 1

R5 10 1/2W

C3 .01

R11 330, 1W

D9 A114B

D3 A114B

D10 A114B

R12 820 1/2W

D14 A114B

D12 A114B

Q4 2N4401

R27 220, 1W

D18 672

R69 62

D15 A114B

C10 5600PF

Q3 D44C12

R14 39

D13 A114M

R13 150, 2W

D4 A114B

R3 2.7, 1/2W

Q1 MJE 13009

C1 2700 PF

D1 A114B

R1 300 2W

D2 A114M

T3

D6 A114B

R4 27, 1/2W

Q2 MJE13009

C2 2700 PF

D5 A114M

D7 A114B

R2 300 2W

T1

R6 10, 1/2W

C5 .01

D23 SD241

R7 10 1/2W

C6 .01

L2, 35μH

C14 3800

C21 3800

C25 .1

R45 100

C26 .01

Q7 MCR69-1

C7 1000PF

R15 10, 1/2W

D11 UES2403

L1, 400μH

C35 .01

R70 10 1W

C30 560

C31 .1

R16 .04, 2W

T2

D8 672

R19 470

R10 4.7K

R9 47

C12 100PF

T1-8

+5.1V SENSE

+5.1V @ 15A J3-1, 2, 3, 4

+5.1V RTN J3-5, 6, 7

+12.3V @ 3A J3-9

+12.3V

+12.3V RTN J3-10

SEC. Q.C. SENSE A

SEC. Q.C. SENSE B

PRIMARY Q.C. SENSE

+14V

-14V

REVISION HISTORY			
DATE	ECO NUMBER	REV	
12-DEC-80	ECO 5413869-0-1 TWM 1011	B	
4-JUN-81	ECO 5413869-0-1 TWM 1121	C	

DRN T.M. Kellough	DATE 12-8-80	TITLE digital
CHK'D [illegible]	DATE 12-18-80	H7213 MEMORY REGULATOR
DES. ENG. [illegible]	DATE 2-18-81	
PROJ. ENG. [illegible]	DATE 2/19/81	DOCUMENT NUMBER
MFG. ENG. [illegible]	DATE 2-18-81	SIZE D | CODE CS | NUMBER 5413869-0-1 | REV B
NEXT HIGHER DOC. E-UA-5413869-0-0		SCALE NONE | SHEET 1 OF 2

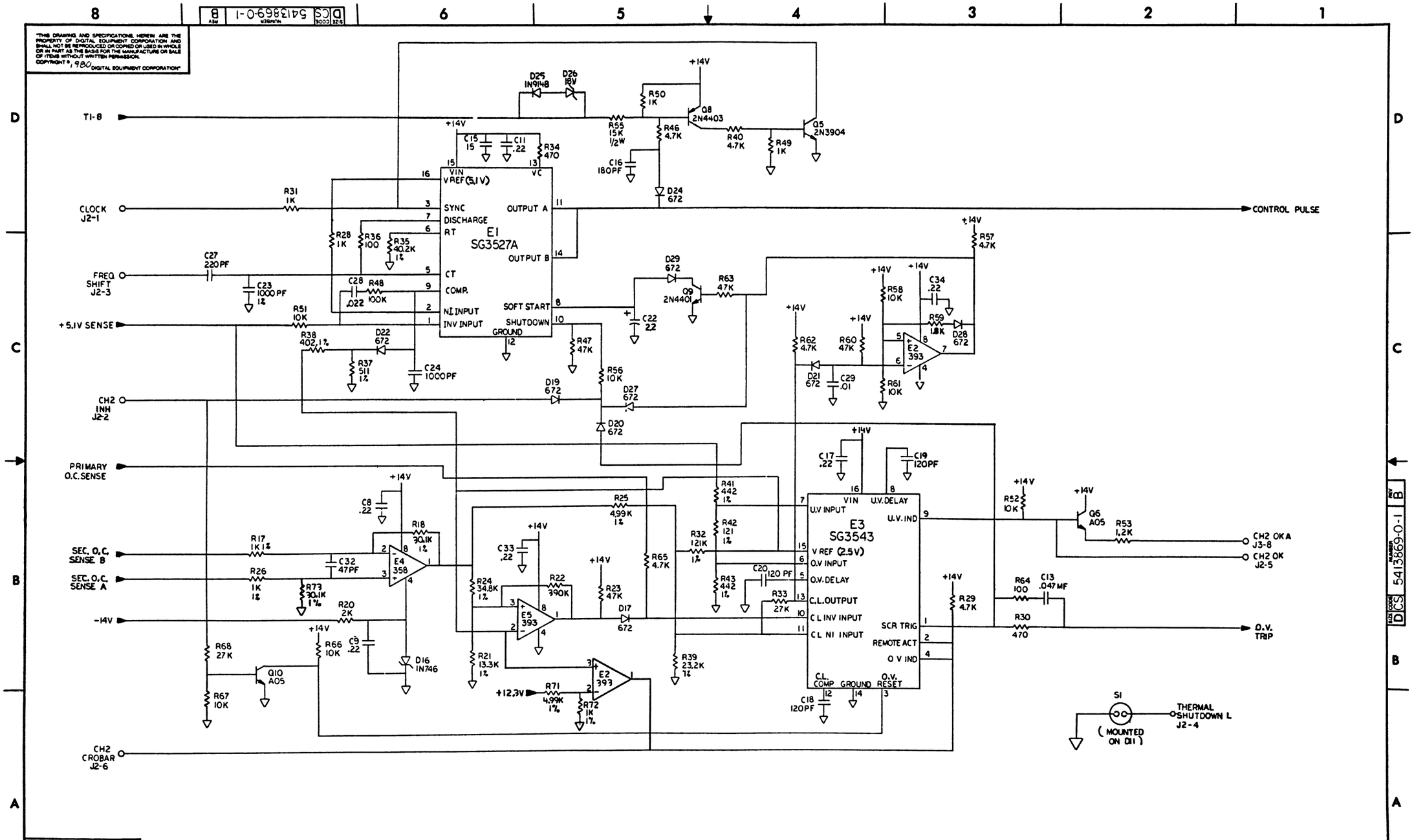

"THIS DRAWING AND SPECIFICATIONS, HEREIN ARE THE PROPERTY OF DIGITAL EQUIPMENT CORPORATION AND SHALL NOT BE REPRODUCED OR COPIED OR USED IN WHOLE OR IN PART AS THE BASIS FOR THE MANUFACTURE OR SALE OF ITEMS WITHOUT WRITTEN PERMISSION. COPYRIGHT © 1980 DIGITAL EQUIPMENT CORPORATION"

REVISION HISTORY		
DATE	ECO NUMBER	REV

TITLE H7213 MEMORY REGULATOR

DOCUMENT NUMBER			
SIZE	CODE	NUMBER	REV.
D	CS	5413869-0-1	B
SCALE NONE		SHEET 2 OF 2	

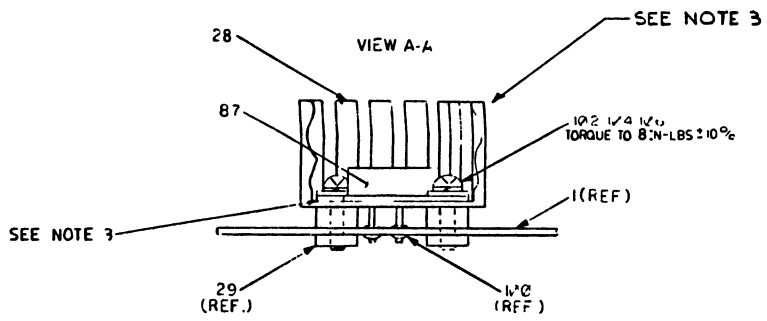

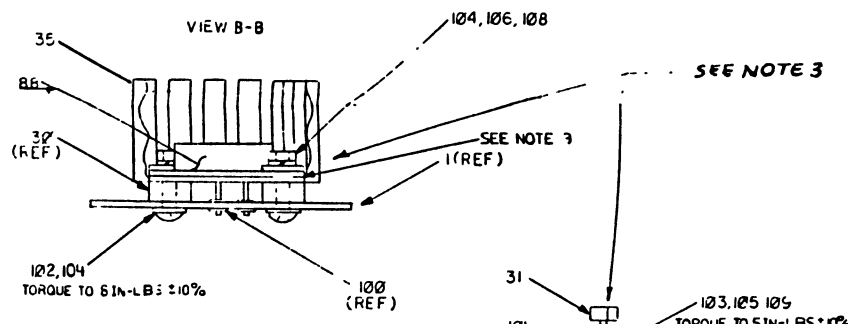

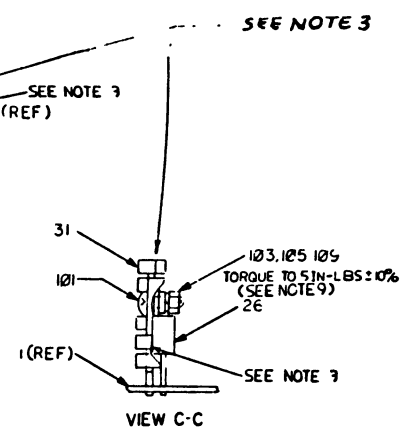

VIEW C-C

NOTES
1. U/L APPROVAL REQUIRED
2. STEP AND REPEAT NC 2 WL 2
3. USE THERMAL COMPOUND (TFM 0") BETWEEN Q5 Q16 D26 L29 AND HEATSINKS
4. RAISE R13 R48 R66 R67 R68 R69 R71 AND R73 .05 TO 10 OFF P.C. BOARD
5. USE SPACERS (ITEM 110) TO RAISE R74 AND R75 OFF P.C. BOARD
6. FULL PIN'S ; ANT 4 FROM CONN "J" BEFORE INSERTING IN P.C. BOARD
7. TC BOTH SIDES OF C2 C23 C24 ADD .125"

STEP & REPEAT: + Y AXIS ___ STEP ___ TIMES; + X AXIS 2.750 STEP 1 TIMES

NOTE (CONTINUATION)
7 APPROX TUBING (ITEM 123)
8 DARK SIDE OF CONN J1 J2
9 D26 AND D29 MUST BE MOUNTED TO HEATSINK BEFORE BEING ATTACHED TO PCB
10 ITEM 27 IS APPROX 3/4" LONG AND USED ONLY WHERE DESIGNATED ON HEATSINK.
11 SOLDER MASK MOLE PRIOR TO SOLDER WAVE.
12. ALL LOCATIONS FOR DRILL HOLES ACCORD PER REWORK INSTRUCTIONS ON SHEET 1 AND SHOWN IN SHEET 2

ETCH REV. B

SIGNATURES	DATE
DRN.	7/23/80
CHK D.	7/28/80
MECH. ENG.	8-25-80
PROJ. ENG.	8/26/80
PROD.	8-29-80
SCALE 2/1	
SHT. 1 OF 1	
NEXT HIGHER ASSY. B-DD-5413867-0	

digital

TITLE H7211 COMMUNICATION REG

SIZE E | CODE | NUMBER UA 5413867-0 0 | REV F

E UA 5413867-0 B

THIS DRAWING AND SPECIFICATIONS HEREIN ARE THE PROPERTY OF DIGITAL EQUIPMENT CORPORATION AND SHALL NOT BE REPRODUCED OR COPIED OR USED IN WHOLE OR IN PART AS THE BASIS FOR THE MANUFACTURE OR SALE OF ITEMS WITHOUT WRITTEN PERMISSION
COPYRIGHT © 1980 DIGITAL EQUIPMENT CORPORATION

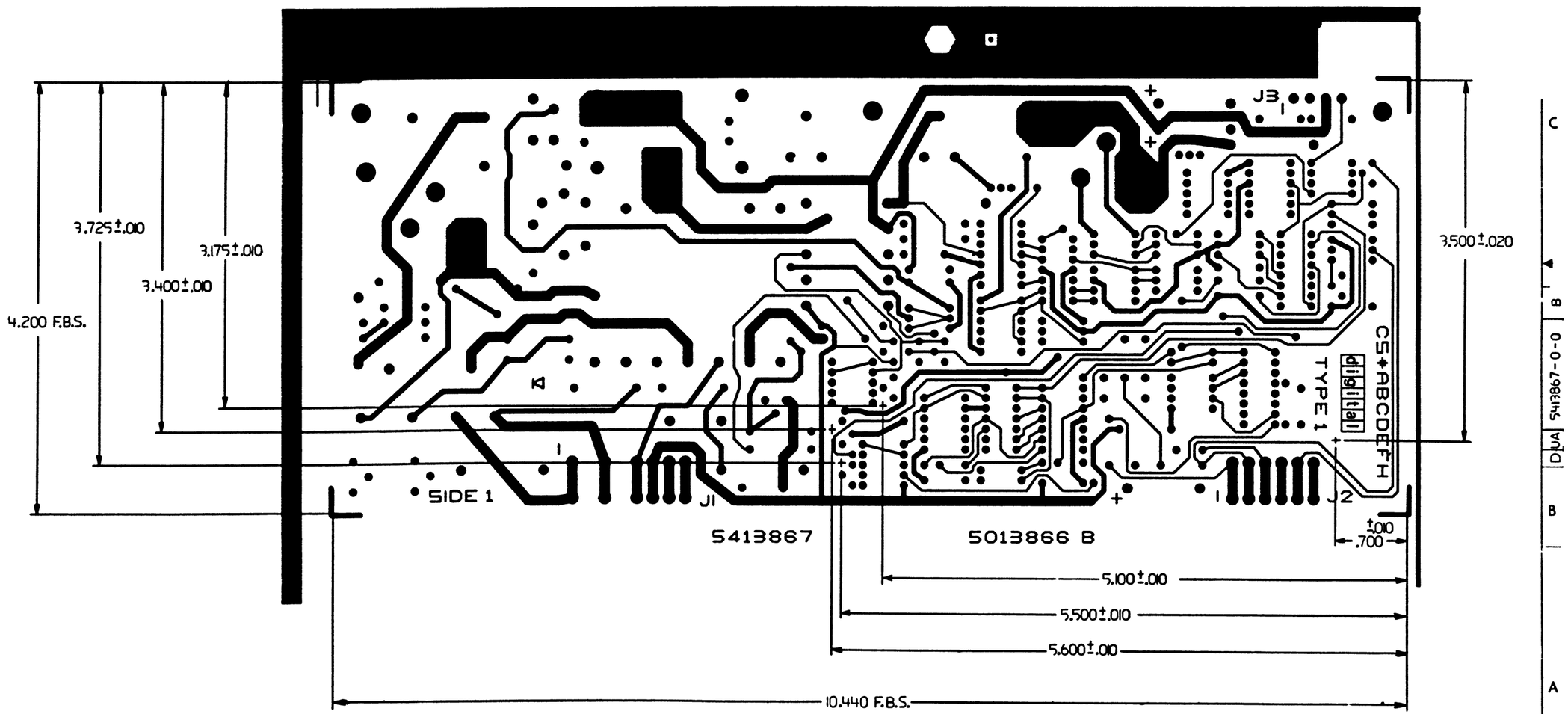

REVISION HISTORY		
DATE	ECO NUMBER	REV

TITLE H7211 COMMUNICATION REG

DOCUMENT NUMBER			
SIZE	CODE	NUMBER	REV.
D	UA	5413867-0-0	B

SCALE 2/1 SHEET 2 OF 3

"THIS DRAWING AND SPECIFICATIONS, HEREIN, ARE THE PROPERTY OF DIGITAL EQUIPMENT CORPORATION AND SHALL NOT BE REPRODUCED OR COPIED OR USED IN WHOLE OR IN PART AS THE BASIS FOR THE MANUFACTURE OR SALE OF ITEMS WITHOUT WRITTEN PERMISSION.
COPYRIGHT © 1980 DIGITAL EQUIPMENT CORPORATION"

REWORK INSTRUCTIONS

WIRE ADDS SIDE 1

0-6 FROM C22 TO C24
0-7 FROM C20 TO R50
0-8 FROM C41 TO R60
0-9 FROM OTHER SIDE OF C41 TO OTHER SIDE OF R60.
0-13 FROM R20 TO PTH LEADING TO J2 PIN 1
0-18 FROM Q1/COLLECTOR TO R81.(WRAP WIRE AROUND COMPONENT LEAD)

COMPONENT ADDS SIDE 1

0-10 INSTALL R79 BY DRILLING ONE .042" HOLE AS SHOWN AND TACK SOLDER TO LARGE GND. ETCH ON SIDE 2, ALSO TACK SOLDER OTHER SIDE OF RESISTOR TO ETCH LEADING TO J2 PIN 5 SIDE1

0-11 INSTALL R78 BY DRILLING ONE .042' HOLE AS SHOWN AND TACK SOLDER TO SIDE 2 ETCH LEADING TO BASE OF Q9. ALSO TACK SOLDER OTHER SIDE OF R78 TO ETCH BETWEEN R54 AND E3 PIN1, SIDE 1.

0-15 INSTALL R80 BY TACK SOLDERING ONE SIDE TO ETCH RUN LEADING TO E1-10 AND TACK SOLDER OTHER SIDE TO ETCH RUN BETWEEN D6/CATHODE AND PTH UNDER R30. (USE .25" APPROX. SLEEVING, ITEM 123, ON SIDE CONNECTED TO D6.)

0-16 INSTALL C15 BY DRILLING TWO .042" HOLES AS SHOWN. TACK SOLDER BOTTOM LEAD OF COMPONENT TO ETCH LEADING TO Q12/BASE.(SIDE 2) TACK SOLDER REMAINING LEAD TO ETCH LEADING TO Q12/EMITTER.(SIDE 2)

0-17 INSTALL R81 AND C42 BY DRILLING FOUR .042"HOLES. TACK SOLDER TOP LEAD OF C42 TO ETCH RUN BETWEEN C1 AND R1. (SIDE 2) JUMPER BOTTOM OF C42 AND TOP R81 USING COMPONENT LEADS.(SIDE 2) TACK SOLDER BOTTOM LEAD OF R81 TO ETCH RUN BETWEEN Q2/COLLECTOR AND C2/POSITIVE.(SIDE 2)

0-19 INSTALL R82 BY TACK SOLDERING ONE SIDE TO ETCH RUN BETWEEN E4-8 AND D10/CATHODE. TACK SOLDER OTHER SIDE TO ETCH RUN BETWEEN R32 AND R26.

ECO #1

WIRE DELETE SIDE 1

1-1 FROM Q1/COLLECTOR TO R81.

COMPONENT DELETES SIDE 1

1-2 DELETE C8 DEC #1001610-00.
1-3 DELETE C42 DEC #1013466-11.
1-4 DELETE R81 DEC #1300479-00.
1-5 DELETE R15 DEC #1317494-00.
1-6 DELETE R18 DEC #1316843-00.
1-7 DELETE C13 DEC #1002476-00.
1-8 DELETE R52 DEC #1300439-00.
1-9 DELETE C32 DEC #1001610-00.
1-10 DELETE R32 DEC #1305353-00.
1-11 DELETE D31 DEC #1112595-02.

COMPONENT ADDS SIDE 1

1-12 ADD R15 DEC #1313342-00.
1-13 ADD R81 DEC #1301425-00.
1-14 ADD R32 DEC #1315096-00.
1-15 ADD R18 DEC #1313752-00.
1-16 ADD C13 DEC #1000026-00.
1-17 ADD R52 DEC #1300365-00.
1-18 ADD C32 DEC #1012783-00.
1-19 ADD D31 DEC #1115112-00.

REVISION HISTORY

DATE	ECO NUMBER	REV.

TITLE H7211 COMMUNICATION REG

DOCUMENT NUMBER: SIZE D | CODE UA | NUMBER 5413867-0-0 | REV. B

SCALE 2/1 | SHEET 3 OF 3

DUA5413867-C-0 B

AUTOMATED BY PRTLST.3P(44) — P A R T S L I S T — SHEET A1 OF A4

LINE	ITEM	DOCUMENT NUMBER	PART NUMBER	DESCRIPTION	QTY PER VARIATION 00	QTY PER VARIATION YA	REFERENCE DESIGNATOR
1	1	D-MD-5013866-0-0	5013866-00	DRILL + ETCH BRD	1	1	
2	2	BLANK			0	0	
3	3		1001610-00	.01 MFD 50V +80-20% Z5U CER	2	2	C6,C18
4	4		1000026-00	680.0 MMF 100V 5%200PPM MICA	1	1	C13
5	5		1005784-00	.01 MFD 100V 200V 10% MYL	1	1	C33
6	6		1010274-02	1 MFD 50V +80-20% CER	3	3	C17,C23,C24
7	7		1011847-02	.01 MFD 600V 10% POLYPROP	1	1	C38
8	8		1011847-03	.0047 MFD 600V 10% POLYPROP	2	2	C36,C39
9	9		1012784-00	.047 MFD 50V +80-20% CER	2	2	C41,C9
10	10		1013466-04	33.0 MMF 50V 5% CER	1	1	C28
11	11		1013466-06	100.0 MMF 50V 5% CER	2	2	C21,C27
12	12		1013466-08	680.0 MMF 50V 10% X7R CER	2	2	C22,C15
13	13		1012783-00	.022 MFD 50V +80-20% CER	1	1	C32
14	14		1013466-12	2200.0 MMF 50V 10% X7R CER	2	2	C19,C34
15	15		1013466-11	.22 MFD 50V +80-20% Z5U CER	5	5	C3-C5,C29,C30
16	16		1014170-00	2700.0 MMF 100V 1% 70PPM MICA	1	1	C14
17	17		1015573-01	5600.0 MMF 50V 5% CER	2	2	C7,C16
18	18		1017472-00	10 MFD 35V +50-10% AL EL	3	3	C10-C12
19	19		1016992-00	2700 MFD 25V +75-10% AL EL	3	3	C31,C35,C37
20	20		1015202-03	.0013 MFD 1600V 10% POLYPROP	1	1	C40
21	21		1103441-00	1N 756A VZ= 8.2 5% .40W P	1	1	D9
22	22		1105275-00	D 672 TR= 15NS PIV= 60V SI	21	21	D1-D8,D10-D18,D20-D23
23	23		1112595-01	A114B PIV=200 I= 1A	9	9	D19,D24,D25,D27,D35-D39
24	24		1112595-02	A114M PIV=600 I= 1A	1	1	D30
25	25		1115112-00	PIV=800V I=1A	4	4	D28,D34,D40,D31
26	26		1117490-00	UES 1403 RECTIFIER 150V 8A TO220	2	2	D26,D29
27	27		9107252-00	TUBING,SHRINK 3/8 DIA.EXP UL	A/R	A/R	
28	28		1213426-03	HEAT SINK TO-3 1"HIGH	1	1	
29	29		1214789-00	INSERT,THREADED 6-32 ,BRASS,ELEC	2	2	
30	30		1214809-02	INSERT,W/O INTERNAL THREADS,THRU	2	2	

REVISION HISTORY			BASIC PART NO: 5413867
ENG	ECO NUMBER	REV	SECTION A OF A
---	INITIAL	B	SECTION.VARIATION INDEX [A] 00,YA [B] [C] [D] [E] [F] [H] [J] [K] [L] [M] [N]

	D	I	G	I	T	A	L
TITLE	PARTS LIST						
H7211 COMMUNICATIONS REG							

DRN: J. FERGUSON	DATE: 5-AUG-80	DOCUMENT NUMBER	
CHK'D: J. FERGUSON	DATE: 21-OCT-80	SIZE	K
DES.ENG: D. DRINKWATER	DATE: 21-OCT-80	CODE	PL
RESP.ENG.: C. LANDINO	DATE: 21-OCT-80	NUMBER	5413867-0-DBP
MFG.ENG.: H. ORTIZ	DATE: 23-FEB-81	REV	B
ASSEMBLY NUMBER: D-UA-5413867-0-0	TOP DOCUMENT NUMBER: B-DD-5413867-0-0	FILE NAME: Z13098.PLS	EDIT # 12

"THIS DRAWING AND SPECIFICATIONS HEREIN, ARE THE PROPERTY OF DIGITAL EQUIPMENT CORPORATION AND SHALL NOT BE REPRODUCED OR COPIED OR USED IN WHOLE OR IN PART AS THE BASIS FOR THE MANUFACTURE OR SALE OF ITEMS WITHOUT WRITTEN PERMISSION.
COPYRIGHT (C) 1981. DIGITAL EQUIPMENT CORPORATION "

LINE	ITEM	DOCUMENT NUMBER	PART NUMBER	DESCRIPTION	QTY PER VARIATION 00	YA	REFERENCE DESIGNATOR
31	31		1215228-00	HEAT SINK,TO-220,VERTICAL MNT	2	2	
32	32		1216122-11	HEADER.156 4POS KEYED	1	1	J3
33	33		1217990-04	HEADER.156 6SKT RCPT	1	1	J2
34	34		1217990-02	HEADER.156 8SKT RCPT	1	1	J1
35	35		1213426-01	HEAT SINK TO-3	1	1	
36	36		1301425-00	300.0 .25 W 5.0 % CC	1	1	R81
37	37		1300171-00	10.0 1.0 W 5.0 % CC	1	1	R65
38	38		1300229-00	100.0 .25 W 5.0 % CC	4	4	R4,R47,R76,R60
39	39		1300287-00	270.0 1.0 W10.0 % CC	1	1	R72
40	40		1300315-00	470.0 .50 W 5.0 % CC	2	2	R57,R64
41	41		1300365-00	1.0 K .25 W 5.0 % CC	2	2	R20,R52
42	42		1300391-00	1.50 K .25 W 5.0 % CC	1	1	R25
43	43		1300398-00	1.80 K .25 W 5.0 % CC	2	2	R33,R45
44	44		1300417-00	2.20 K .25 W 5.0 % CC	1	1	R5
45	45		1300426-00	2.70 K .25 W 5.0 % CC	1	1	R38
46	46	BLANK			0	0	
47	47		1300479-00	10.0 K .25 W 5.0 % CC	13	13	R1,R3,R12,R19,R39,R40,R51,R53,
						CONT	R54,R56,R78,R80,R82
48	48		1301317-00	10.0 .25 W 5.0 % CC	1	1	R62
49	49		1301320-00	1.20 K .25 W 5.0 % CC	2	2	R6,R31
50	50		1301423-00	6.80 K .25 W 5.0 % CC	3	3	R50,R61,R79
51	51		1301890-00	560.0 .25 W 5.0 % CC	1	1	R21
52	52		1302377-00	39.0 .25 W 5.0 % CC	1	1	R63
53	53		1302394-00	30.0 K .25 W 5.0 % CC	1	1	R22
54	54		1302466-00	100.0 K .25 W 5.0 % CC	1	1	R49
55	55		1302859-00	5.76 K .25 W 1.0 % RN55D-F10	1	0	R14
56	56		1303114-00	1.0 K .25 W 1.0 % RN55D-F10	2	2	R9,R34
57	57		1303187-00	820.0 K .25 W 5.0 % CC	1	1	R28
58	58		1303305-00	6.98 K .25 W 1.0 % RN55D-F10	1	0	R44
59	59		1304806-00	150.0 3.0 W 1.0 % WW	3	3	R66,R67,R69
60	60		1303311-00	46.40 K .25 W 1.0 % RN55D-F10	1	0	R27
61	61		1304858-00	348.0 .25 W 1.0 % RN55D-F10	1	0	R8
62	62		1304867-00	7.0 K .25 W 1.0 % RN55D-F10	1	1	R42
63	63		1304870-00	6.81 K .25 W 1.0 % RN55D-F10	1	0	R41
64	64		1305121-00	38.30 .25 W 1.0 % RN55D-F10	1	1	R55
65	65		1305124-00	287.0 .25 W 1.0 % RN55D-F10	1	0	R36
66	66		1305346-00	27.0 K .25 W 5.0 % CC	1	1	R2
67	67		1305621-00	111.10 .25 W .10% RN55D-B10	2	2	R11,R48
68	68		1314350-00	1.0 2.0 W10.0 % FUSE	1	1	R77
69	69		1310632-00	2.37 K .25 W 1.0 % RN55D-F10	1	1	R43
70	70		1311522-00	200.0 .25 W 5.0 % CC	2	2	R17,R46
71	71		1312123-00	220.0 3.0 W 1.0 % WW	1	1	R71
72	72		1312930-00	5.10 K .25 W 5.0 % CC	2	2	R7,R37
73	73		1312933-00	360.0 K .25 W 5.0 % CC	1	1	R30
74	74		1313153-00	28.0 K .25 W 1.0 % RN55D-F10	1	1	R10
75	75		1313580-00	360.0 .25 W 5.0 % CC	1	1	R59
76	76		1315096-00	1.87 K .25 W 1.0 % RN55D-F10	1	1	R32
77	77		1309413-00	3.83 K .25 W 1.0 % RN55D-F10	1	1	R24

D	I	G	I	T	A	L	TITLE	SECTION	SIZE	CODE	DOCUMENT NUMBER	REV
							H7211 COMMUNICATIONS REG	A OF A	K	PL	5413867-0-08P	B

AUTOMATED BY PRTLST.3P(44) — P A R T S L I S T — SHEET A3 OF A4

LINE	ITEM	DOCUMENT NUMBER	PART NUMBER	DESCRIPTION	QTY PER VARIATION 00	YA	REFERENCE DESIGNATOR
78	78		1314350-01	.220 2.0 W 5.0% FUSE	1	1	R73
79	79		1314397-00	9.53 K .25 W 1.0 % RN55D-F10	1	1	R16
80	80	BLANK			0	0	
81	81		1313342-00	18.70 K .25 W 1.0 % RN55D-F10	1	0	R15
82	82		1317522-00	1.0 .25 W 5.0 % CC	1	1	R70
83	83		1317515-00	.04 3.0 W 3.0 % WW	2	2	R13,R58
84	84		1318039-00	1.0 K 14.0 W 5.0 % WW	2	2	R74,R75
85	85		1302385-00	750.0 1.0 W 5.0 % CC	1	1	R68
86	86		1510705-00	XA 05 NPN 500MW SI 60 50 P	4	4	Q1,Q2,Q11,Q12
87	87		1510853-00	MJ 1000 NPN 90WC SI 60 1K Y	1	1	Q5
88	88		1512782-00	BUY69A NPN 100W SI325 15	1	1	Q14
89	89		1513489-00	2N 4401 NPN 350MW SI 40 20	2	2	Q7,Q10
90	90		1513490-00	2N 4403 PNP 350MW SI-40 30	2	2	Q8,Q9
91	91		1514271-01	D 44Q5 NPN 31W SI225 30	1	1	Q13
92	92		1117061-00	MCR 69-1 THYRISTOR	2	2	D41,D42
93	93		1617557-00	XFMR,CURRENT RATIO 1:2:100 PC MT	1	1	T3
94	94		1617440-00	XFMR P=370V S=VARIABLE	1	1	T1
95	95		1617467-00	PULSE XFMR PC MOUNT	1	1	T2
96	96		1912107-00	324 OP AMP,QUAD	1	1	E4
97	97		1912108-00	339 VOLT CMPRTR,QUAD	1	1	E3
98	98		1916819-00	3527A MODULATOR,REGULATING	1	1	E1
99	99		1917059-00	3543 P.S. SUPERVISORY CIR	1	1	E2
100	100		9000024-09	EYELET,ROLL FLANGE .0890DX .125	4	4	
101	101		9006010-01	SCREW,PAN,PHIL 4-40X 5/16 SS	2	2	
102	102		9007793-01	SCREW,PAN,PHIL 6-32X 9/16 SS	4	4	
103	103		9006556-00	NUT,HEX 4-40X1/4 AF X 3/	2	2	
104	104		9006656-00	WASHER, FLAT, .312 O.D. X .156 I	6	6	
105	105		9006688-00	WASHER, LOCK, S.S. #4	2	2	
106	106		9007801-00	WASHER, LOCK, S.S. #6	4	4	
107	107		9008268-00	COMPOUND, THERMAL JOINT	A/R	A/R	
108	108		9008957-00	NUT,HEX 6-32X 1/4 AF X 3	2	2	
109	109		9009769-00	WASHER, RECTANGULAR .405X.225X.0	2	2	
110	110		9009798-00	SPACER, CERAMIC, .186 ODX.078 ID	4	4	
111	111	BLANK			0	0	
112	112		1312452-00	3.74 K .25 W 1.0 % RN55D-F10	1	1	R35
113	113		1305128-00	5.62 K .25 W 1.0 % RN55D-F10	0	2	R44,R41
114	114		1304863-00	316.0 .25 W 1.0 % RN55D-F10	0	1	R36
115	115		1313598-00	32.40 K .25 W 1.0 % RN55D-F10	0	1	R27
116	116		1313752-00	15.0 K .25 W 1.0 % RN55D-F10	1	-	R18
			CONT		-	1	R15
117	117		1304856-00	4.64 K .25 W 1.0 % RN55D-F10	0	1	R14
118	118		1305125-00	383.0 .25 W 1.0 % RN55D-F10	0	1	R8
119	119		1313597-00	23.70 K .25 W 1.0 % RN55D-F10	1	1	R26
120	120		1013466-22	.1 MFD 50V +80-20% Z5U CER	3	3	C1,C20,C25
121	121		1018000-02	22 MFD 35V +50-10% AL EL	1	1	C2
122	122		9105740-55	WIRE(WRAP)30AWG UL1423	A/R	A/R	
123	123		9107256-11	TUBING,THIN WALL,.027ID UL	A/R	A/R	

D	I	G	I	T	A	L	TITLE	SECTION	SIZE	CODE	DOCUMENT NUMBER	REV
							H7211 COMMUNICATIONS REG	A OF A	K	PL	5413867-0-DBP	B

LINE	ITEM	DOCUMENT NUMBER	PART NUMBER	DESCRIPTION	QTY PER VARIATION 00 YA	REFERENCE DESIGNATOR
124		NOTE: ITEM #122; .37' IS USED.				
125		NOTE: ITEM #123; .13' IS USED.				
126		NOTE: ITEM #27; .15' IS USED.				

DIGITAL	TITLE	SECTION	SIZE	CODE	DOCUMENT NUMBER	REV
	H7211 COMMUNICATIONS REG	A OF A	K	PL	5413867-0-DBP	B

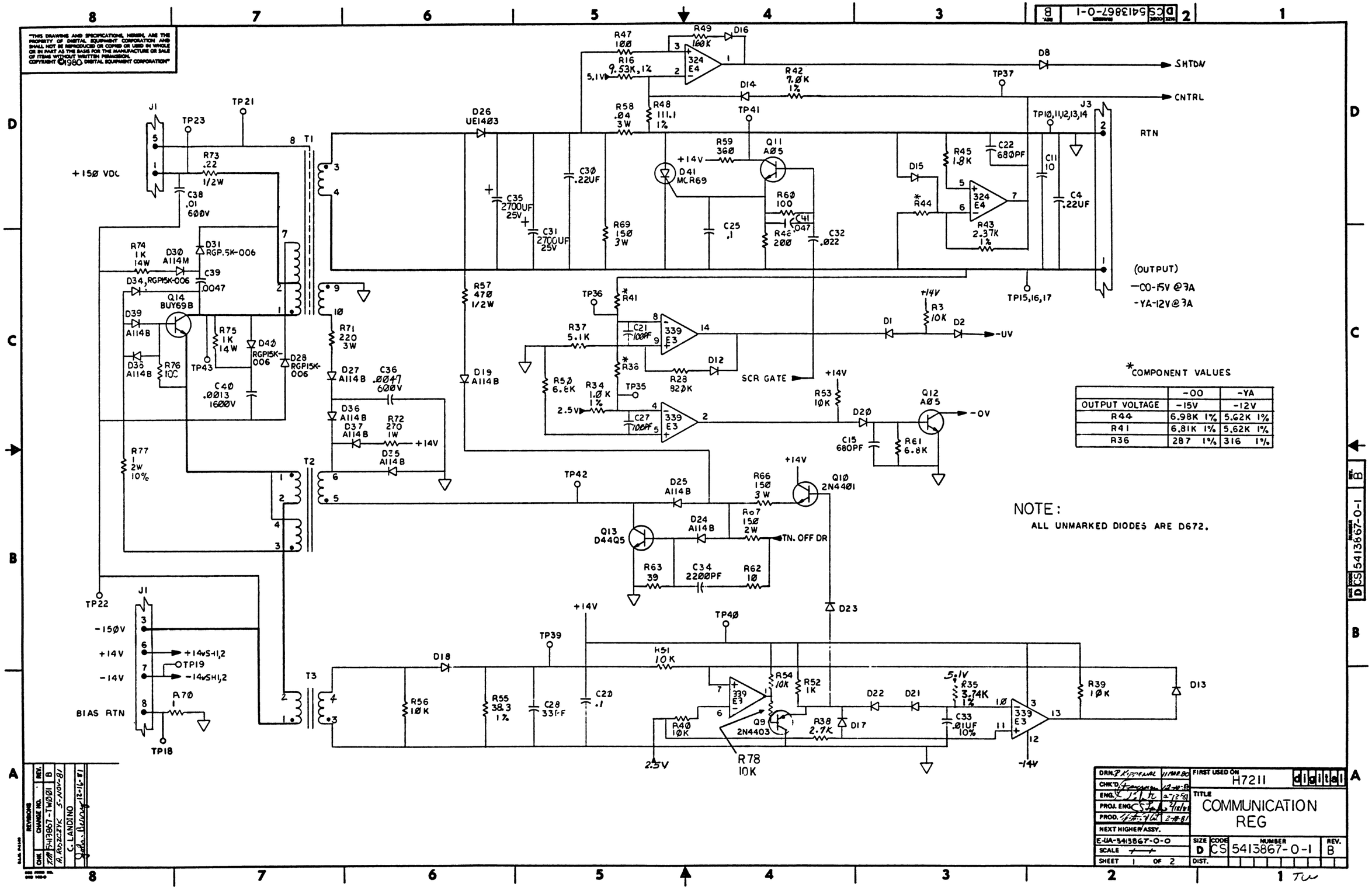

*COMPONENT VALUES

	-00	-YA
OUTPUT VOLTAGE	-15V	-12V
R44	6.98K 1%	5.62K 1%
R41	6.81K 1%	5.62K 1%
R36	287 1%	316 1%

NOTE:
ALL UNMARKED DIODES ARE D672.

"THIS DRAWING AND SPECIFICATIONS, HEREIN, ARE THE PROPERTY OF DIGITAL EQUIPMENT CORPORATION AND SHALL NOT BE REPRODUCED OR COPIED OR USED IN WHOLE OR IN PART AS THE BASIS FOR THE MANUFACTURE OR SALE OF ITEMS WITHOUT WRITTEN PERMISSION. COPYRIGHT © 1980 DIGITAL EQUIPMENT CORPORATION"

DRN. P. Kippenal	11 MAR 80	FIRST USED ON H7211
CHK'D	12-10-80	digital
ENG.	2-12-81	TITLE COMMUNICATION REG
PROJ. ENG.	2/18/81	
PROD.	2-18-81	
NEXT HIGHER ASSY.		
E-UA-5413867-0-0		SIZE D CODE CS NUMBER 5413867-0-1 REV. B
SCALE		
SHEET 1 OF 2		DIST.

REVISIONS

CHK	CHANGE NO.	REV.
T.M.	5413867-TW001	B
A. RUSZCZYK	5-NOV-81	
C. LANDINO	12-16-81	

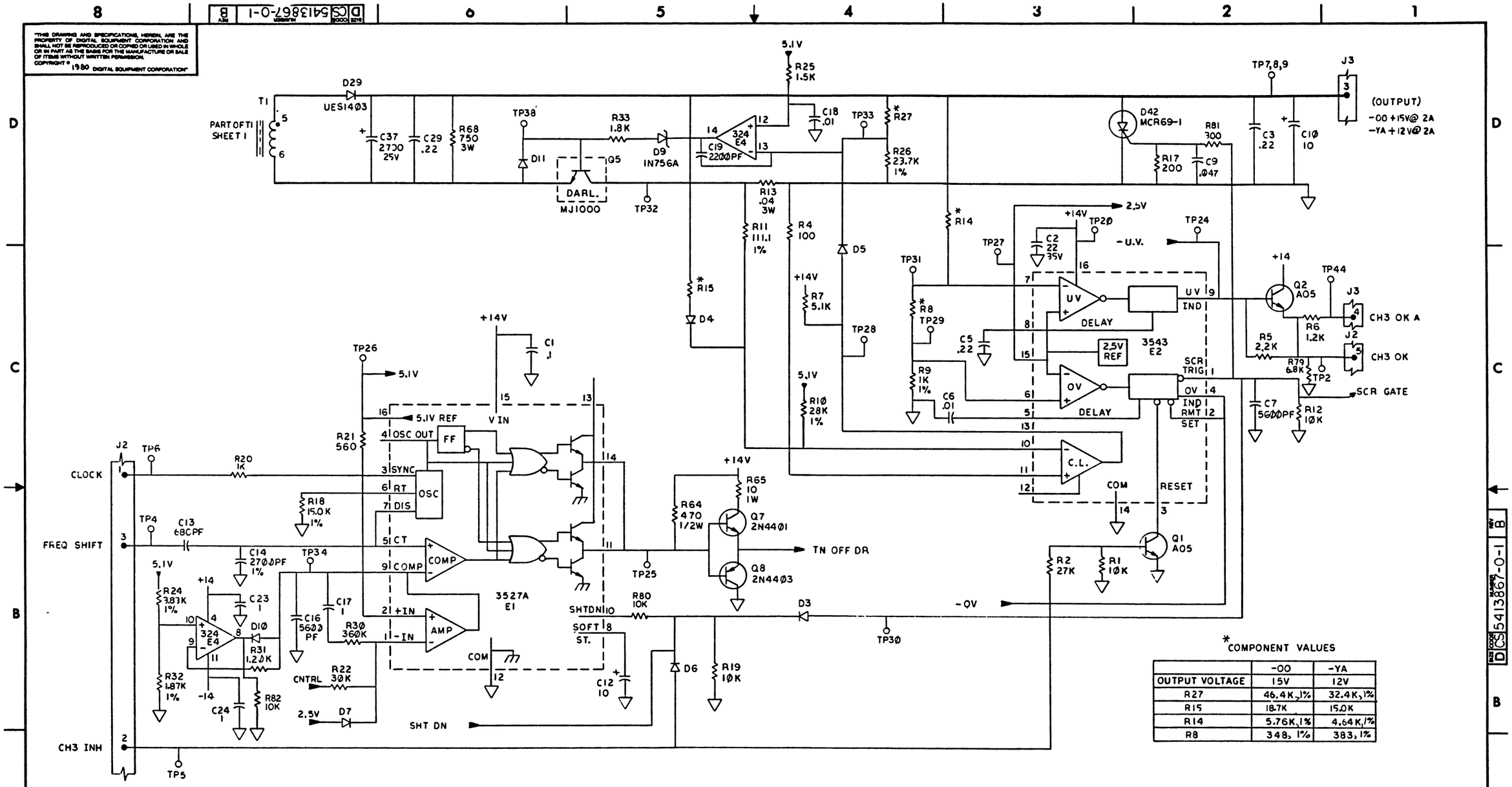

*COMPONENT VALUES

	-00	-YA
OUTPUT VOLTAGE	15V	12V
R27	46.4K, 1%	32.4K, 1%
R15	18.7K	15.0K
R14	5.76K, 1%	4.64K, 1%
R8	348, 1%	383, 1%

ALL DIODES D672 UNLESS NOTED OTHERWISE.

"THIS DRAWING AND SPECIFICATIONS, HEREIN, ARE THE PROPERTY OF DIGITAL EQUIPMENT CORPORATION AND SHALL NOT BE REPRODUCED OR COPIED OR USED IN WHOLE OR IN PART AS THE BASIS FOR THE MANUFACTURE OR SALE OF ITEMS WITHOUT WRITTEN PERMISSION. COPYRIGHT © 1980 DIGITAL EQUIPMENT CORPORATION"

REVISION HISTORY

DATE	ECO NUMBER	REV.

TITLE COMMUNICATION REG

DOCUMENT NUMBER

SIZE	CODE	NUMBER	REV.
D	CS	5413867-0-1	B

SCALE — SHEET 2 OF 2

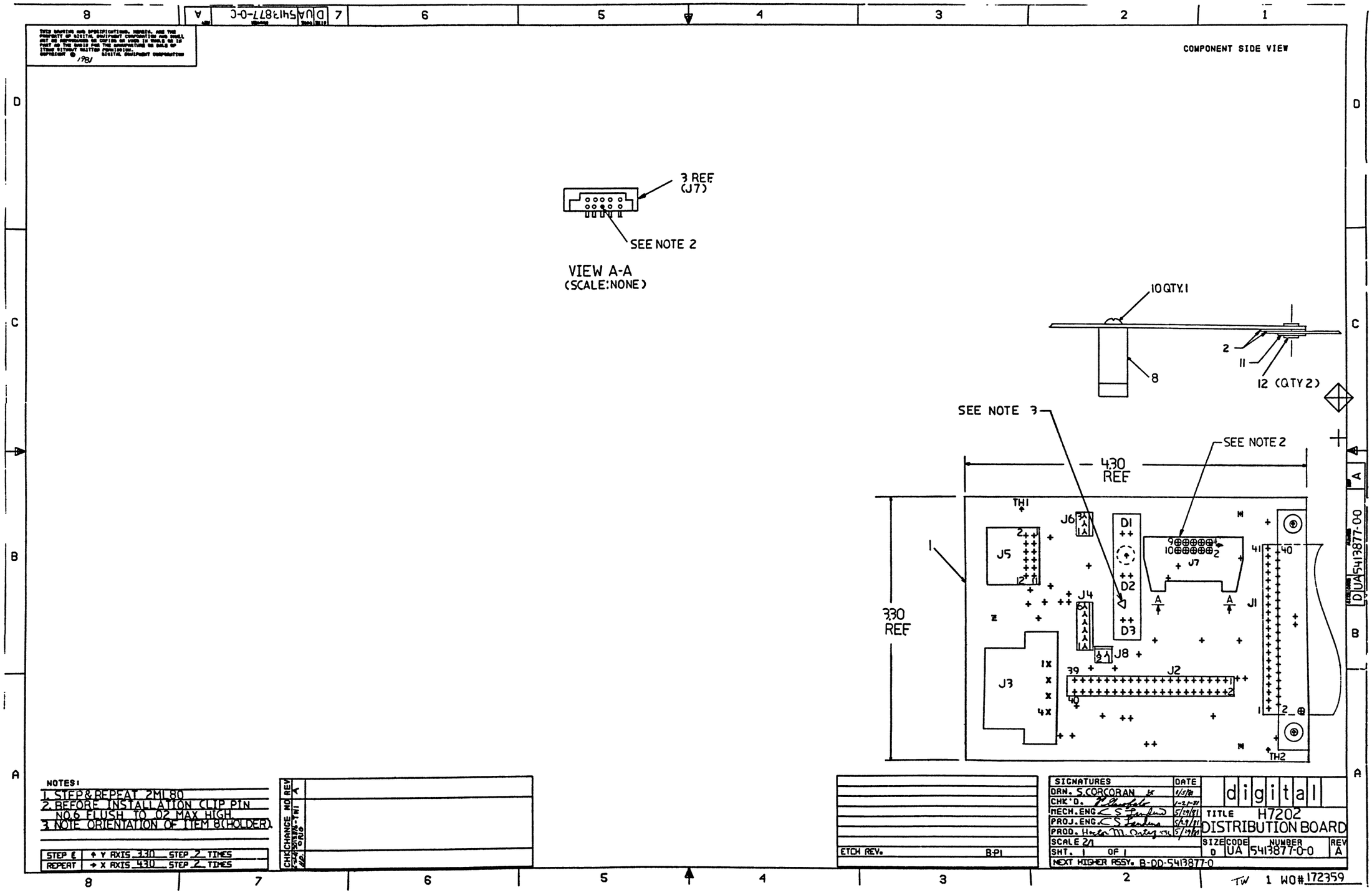
COMPONENT SIDE VIEW
3 REF (J7)
SEE NOTE 2
VIEW A-A
(SCALE:NONE)
10 QTY.1
2
11
8
12 (QTY 2)
SEE NOTE 3
SEE NOTE 2
4.30 REF
3.30 REF
TH1
TH2
J1
J2
J3
J4
J5
J6
J7
J8
D1
D2
D3
NOTES:
1. STEP & REPEAT 2ML80
2. BEFORE INSTALLATION CLIP PIN NO.6 FLUSH TO .02 MAX HIGH.
3. NOTE ORIENTATION OF ITEM 8(HOLDER).
STEP & REPEAT
Y AXIS 3.30 STEP 2 TIMES
X AXIS 4.30 STEP 2 TIMES
CHK CHANGE NO REV
ETCH REV. B-P1
SIGNATURES
DATE
DRN. S.CORCORAN
CHK'D.
MECH.ENG.
PROJ.ENG.
PROD.
SCALE 2/1
SHT. 1 OF 1
NEXT HIGHER ASSY. B-DD-5413877-0
digital
TITLE H7202
DISTRIBUTION BOARD
SIZE D
CODE UA
NUMBER 5413877-0-0
REV A
TW 1 WO# 172359
D UA 5413877-0-0

AUTOMATED BY PRTLST.3P(44) P A R T S L I S T SHEET A1 OF A1

LINE	ITEM	DOCUMENT NUMBER	PART NUMBER	DESCRIPTION	QTY PER VARIATION 00	REFERENCE DESIGNATOR
1	1	D-MD-5013876-0-0	5013876-00	DRILL AND ETCH BOARD	1	
2	2		1700213-00	CIRCUIT,FLEXIBLE DISTRIBUTION	1	
3	3		1209941-05	HEADER.100 10POS RT ANGLE	1	J7
4	4		1211004-01	SOCKET.100 40POS BOTTOM MOUNT	1	J2
5	5		1218243-02	HEADER.100 2PIN STRAIGHT	1	J8
6	6		1216112-04	HEADER.100 12POS DB SHROUDED	1	J5
7	7		1218027-00	HEADER 4PIN RT ANGLE	1	J3
8	8		1210940-02	LED HOLDER(3-DEC PART 11-10864)	1	
9	9		1110324-00	LED 1MCD@10MA PIV=3	3	D1-D3
10	10		9010128-00	SCREW,TAPPING,TYPE PAN ,PHIL,	1	
11	11	C-MD-7425196-0-0	7425196-00	BRACKET,STRAIN RELIEF	1	
12	12		9000024-01	EYELET,ROLL FLANGE .1210DX .192	2	
13	13		1218243-00	HEADER.100 3PIN STRAIGHT	1	J6
14	14		1218243-03	HEADER.100 6PIN STRAIGHT	1	J4

REVISION HISTORY			BASIC PART NO: 5413877										
ENG	ECO NUMBER	REV	SECTION A OF A	DRN: J.FERGUSON	DATE: 16-OCT-80		D	I	G	I	T	A	L
---	INITIAL	A	SECTION.VARIATION INDEX [A] 00 [B] [C] [D] [E] [F] [H] [J] [K] [L] [M] [N]	CHK'D: J.FERGUSON	DATE: 16-OCT-80	TITLE PARTS LIST H7202 DISTRIBUTION BOARD							
				DES.ENG: C.LANDINO	DATE: 12-10-80								
				RESP.ENG.: C.LANDINO	DATE: 12-10-80	DOCUMENT NUMBER							
				MFG.ENG.: H.ORTIZ	DATE: 12-11-80	SIZE: K	CODE: PL	NUMBER: 5413877-0-DBP				REV: A	
				ASSEMBLY NUMBER: D-UA-5413877-0-0	TOP DOCUMENT NUMBER: B-DD-5413877-0-0			FILE NAME: Z1312.PLS				EDIT #: 10	

"THIS DRAWING AND SPECIFICATIONS HEREIN, ARE THE PROPERTY OF DIGITAL EQUIPMENT CORPORATION AND SHALL NOT BE REPRODUCED OR COPIED OR USED IN WHOLE OR IN PART AS THE BASIS FOR THE MANUFACTURE OR SALE OF ITEMS WITHOUT WRITTEN PERMISSION.
COPYRIGHT (C) 1981. DIGITAL EQUIPMENT CORPORATION "

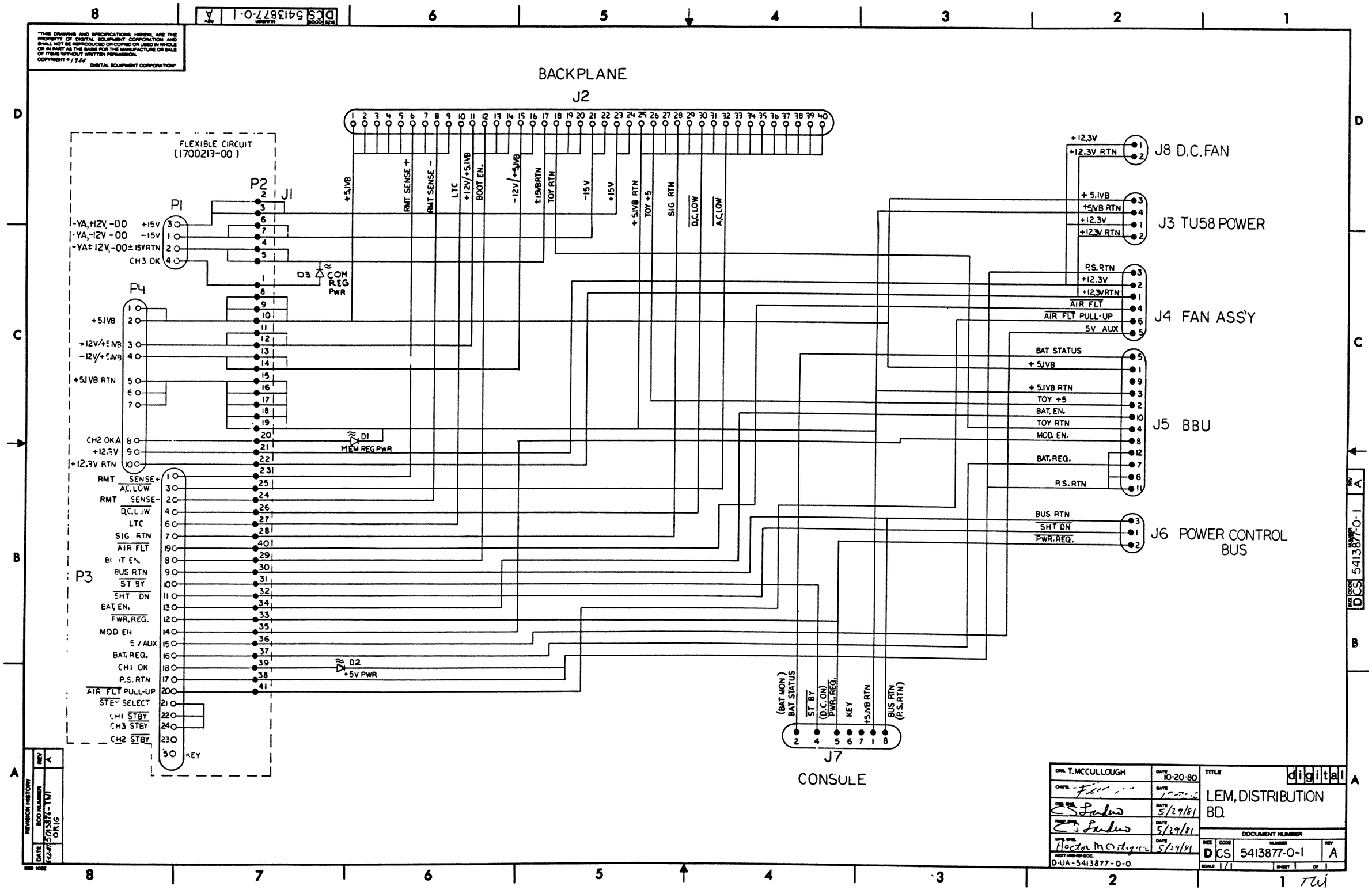

"THIS DRAWING AND SPECIFICATIONS, HEREIN, ARE THE PROPERTY OF DIGITAL EQUIPMENT CORPORATION AND SHALL NOT BE REPRODUCED OR COPIED OR USED IN WHOLE OR IN PART AS THE BASIS FOR THE MANUFACTURE OR SALE OF ITEMS WITHOUT WRITTEN PERMISSION. COPYRIGHT © 1980 DIGITAL EQUIPMENT CORPORATION"

DRN. T. MCCULLOUGH	DATE 10-20-80	TITLE digital	
CHK'D. [illegible]	DATE [illegible]	LEM, DISTRIBUTION BD.	
DES. ENG. C S Landers	DATE 5/29/81		
REQ. ENG. C S Landers	DATE 5/29/81	DOCUMENT NUMBER	
MFG. ENG. Hector M Ortiguer	DATE 5/29/81	SIZE D CODE CS NUMBER 5413877-0-1	REV A
NEXT HIGHER DOC. D-UA-5413877-0-0		SCALE 1/1 SHEET 1 OF 1	

REVISION HISTORY

DATE	ECO NUMBER	REV
5/12/81	5413876-TW1 ORIG	A

DCS 5413877-0-1 A

DIGITAL EQUIPMENT CORPORATION

H7202B POWER SUPPLY ENGINEERING

THIS DRAWING AND SPECIFICATION, HEREIN, ARE THE PROPERTY OF DIGITAL EQUIPMENT CORPORATION AND SHALL NOT BE REPRODUCED OR COPIED OR USED IN WHOLE ORE IN PART AS THE BASIS FOR THE MANUFACTURE OR SALE OF ITEMS WITHOUT WRITTEN PERMISSION

COPYRIGHT C 1981 DIGITAL EQUIPMENT CORPORATION

REV	DESCRIPTION	CHG NO	ORIG	DATE	APPD BY

ENG	APPD	DATE	SIZE	CODE	NUMBER	REV	
C.S. LANDINO	C S Landino	6/26/81	A	SP	H7202-B-0	A	TW

TABLE OF CONTENTS

Chapter 1 SCOPE

1.1 GENERAL DESCRIPTION
1.2 REFERENCE DOCUMENTS

Chapter 2 ELECTRICAL SPECIFICATION

2.1 INPUTS SPECS
2.1.1 Line Voltage
2.1.2 Line Frequency
2.1.3 Line Current
2.1.4 Power Factor
2.1.5 Inrush Current
2.1.6 Overload Protection
2.1.7 Insulation (Hi-Pot)
2.1.8 Input Power
2.1.9 Grounding
2.1.10 Ride-through Capability
2.1.11 Efficiency
2.1.12 Input Over/Under Voltage Conditions
2.1.13 Input Line Noise Susceptibility

2.2 OUTPUT SPECIFICATIONS

2.2.1 Output Voltages
2.2.2 Output Current
2.2.3 Wattage
2.2.4 Line/Load Regulation
2.2.5 Noise
2.2.6 Ripple
2.2.7 Dynamic Response Time
2.2.8 Temperature Coefficient
2.2.9 Short-term Stability
2.2.10 Long-term Stability
2.2.11 Output Overload Protection
2.2.12 Overvoltage Protection
2.2.13 Output Adjustment
2.2.14 Output Sequencing
2.2.15 Voltage Margins

2.3 DC INPUT (BBU)

Chapter 3 ELECTROMAGNETIC INTERFACE

3.1 LIMITS OF EQUIPMENT GENERATED INTERFACE

Chapter 4 APPLICATION SPECIFICATIONS

4.1 INPUT - VOLTAGE, CURRENT AND CORD REQUIREMENTS
4.2 OUTPUT - VOLTAGE, CURRENT AND CORD REQUIREMENTS
4.3 LOAD DUTY CYCLE
4.4 PARALLELING REQUIREMENTS
4.5 LOAD CAPACITANCE
4.6 LOAD CONNECTION CHARACTERISTICS
4.7 REMOTE SENSE
4.8 BBU REQUIREMENTS
4.9 RETURN WIRE VOLTAGE OFFSETS

Chapter 5 LOGIC SIGNALS SPECIFICATION

5.1 OUTPUT SIGNALS
5.1.1 DC LOW
5.1.2 AC LOW
5.1.3 LINE CLOCK
5.1.4 BATTERY BACK-UP ENABLE
5.1.5 BATTERY BACK-UP REQUEST
5.1.6 BOOT ENABLE

5.2 INPUT SIGNALS
5.2.1 DEC POWER BUS
5.2.2 STANDBY
5.2.3 MODULE ENABLE
5.2.4 AIR FAULT

5.3 POWER-UP/POWER-DOWN PROTOCOL

5.4 STATUS INDICATORS

Chapter 6 MECHANICAL AND PHYSICAL SPECIFICATIONS

6.1 SIZE
6.2 WEIGHT
6.3 MOUNTING
6.4 COOLING
6.5 THERMAL PROTECTION
6.6 ACCESSIBILITY
6.7 IDENTIFICATION STICKERS
6.8 INPUT/OUTPUT CONNECTORS
6.9 PACKAGING

Chapter 7 ENVIRONMENTAL SPECIFICATIONS

7.1 TEMPERATURE
7.2 HUMIDITY
7.3 ALTITUDE
7.4 VIBRATION
7.5 SHOCK
7.6 DIRT PROTECTION

Chapter 8 RELIABILITY

8.1 LIFE EXPECTANCY
8.2 MEAN TIME BETWEEN FAILURES

Chapter 9 SAFETY

9.1 ELECTRICAL
9.2 REGULATORY BODIES
9.3 ISOLATION
9.4 GROUNDING

The information in this specification is subject ot change without notice and should not be construed as final. No responsibility is assumed for any errors that may appear in this specification.

CHAPTER 1
SCOPE

1.1 General Description - H7200 Series Power Supplies

This specification covers an off-line, high frequency switching power supply with a regulated 5 volt main output at 0 to 60 amps, memory and communications options outputs up to 400W total for all. It consists of a motherboard with supporting chassis and input- output connections. Size is approximately 15 x 50 cm. and 12 cm. high; weight is approximately 8 kilograms. Input power is 90-132 or 180-264 (internal select switch) at 48-63 Hz.

Outputs are divided into three groups: Main output (Channel 1): 5.1V main; Memory outputs (Channel 2): +5V at 15A for MOS memory, and DC Fan/TU58 power; Com Outputs (Channel 3): ±15V.

All outputs except fan/TU58 +12V feature overvoltage and overcurrent protection and are regulated independently of one another. Battery backup and AC standby are operable for the memory power channel (CH2).

Additionally, AC low and DC low signals are provided as well as AC line clock and boot enable. This power supply will be UL recognized, CSA certified and comply with DEC-STD-119 Rev B.

1.2 Reference Documents

DEC Standard 023 - Circuit Schematics
DEC Standard 60 - Policy Relating to Nationally and Internationally Recognized Laboratories.
DEC Standard 102 - Section 7 - EMI
DEC Standard 102 - Environmental Standards
DEC Standard 116 - Workmanship Standards
DEC Standard 119 - Product Safety
DEC Standard 120 - Cooling Standards
DEC Standard 122 - AC Power Line Standard
DEC Standard 123 - Power Control Bus Standard
DEC Standard 139 - Reliability Prediction
DEC Standard 158 - Unibus

Engineering Print Set
DEC Standard 002 - AC Power Wiring, Grounding, Receptacles and Nameplates
DEC Standard 030 - Module Manufacturing Specification

FIGURE 1

FUNCTIONAL BLOCK DIAGRAM FOR H7200 SERIES POWER SUPPLIES

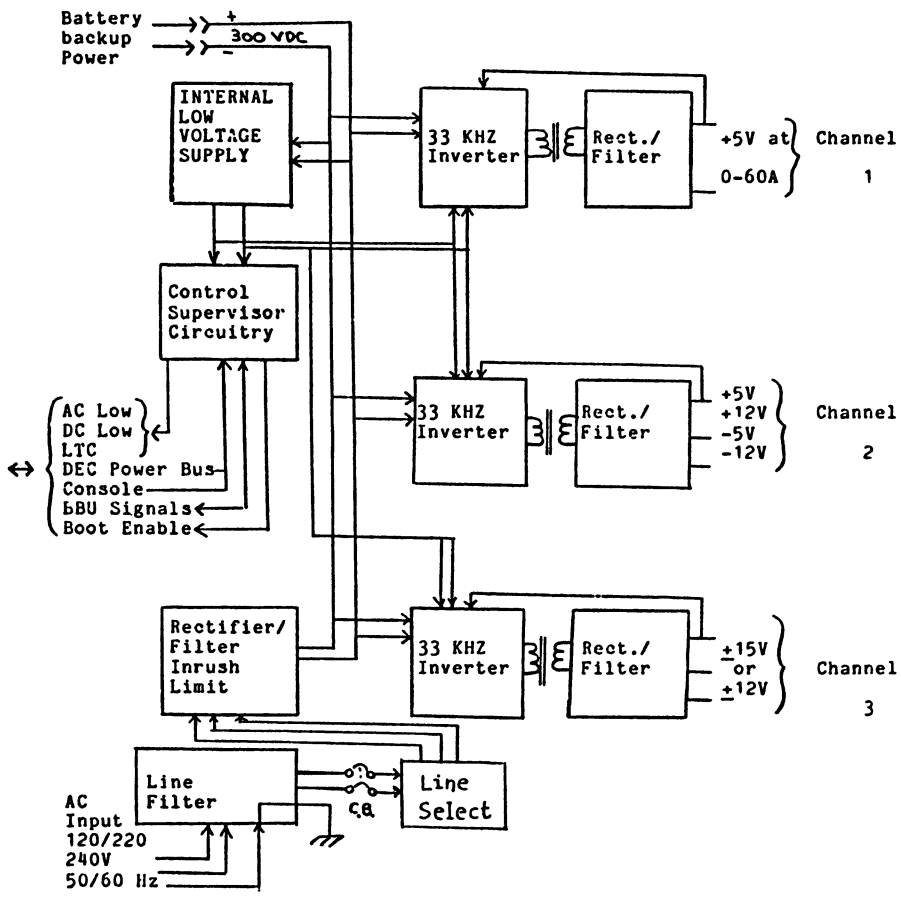

CHAPTER 2
ELECTRICAL SPECIFICATIONS (H7202B)

2.1 Input Specifications - AC Line

Note: Selection of low range or high range is accomplished through a tool operated slide switch located adjacent to the circuit breaker. A clear cover is also used to discourage casual operation.

2.1.1 Line Voltage

Note: Line impedance must be sufficiently low to assure less than 5% total harmonic distortion of the line AC waveform.

Low Range: (120V nominal) 90-132 (rms) single phase three wire.

High Range: (240V nominal) 180-264 (rms) single phase three wire.

2.1.2 Line Frequency

47-63 Hz for either voltage range.

2.1.3 Line Current

Peak and RMS currents vary proportionally with line voltage.

Low Voltage Range: 8.5 amperes (rms) max. and 25 amperes (peak) max. at a nominal 120 VRMS line.

High Voltage Range: 4.2 amperes (rms) max. and 12 amperes (peak) max. at a nominal 240 VRMS line.

2.1.4 Power Factor

The ratio of real power to apparent power shall be greater than 0.60 at full output load and nominal input voltage.

2.1.5 Inrush Current

At first application of input voltage to the power supply, the stated surge current may be reached for 1/2 cycle of the input line. Following that, there will be repetitive peaks of lower amplitude for up to 10 more cycles of the line.

Maximums: Low Voltage Range: 120 A (Peak)

High Voltage Range: 120 A (Peak)

2.1.6 Input Overload Protection

A two pole circuit breaker is provided to protect the input wire and components. This breaker is accessible and is a 15 Amp rating for both 120V and 240V settings.

2.1.7 Insulation/Hi-Pot

2.1.7.1 2120 V dc and 300 VAC, (rms) 50 Hz between input and frame and shields for 1 minute as specified in DEC-STD-119 Rev C, section 2, paragraph 2.

2.1.7.2 2500 VAC (rms) 50 Hz between input and output for 1 minute. In accordance with DEC-STD-119 Rev C. This excludes the line filter.

2.1.7.3 All isolation transformers shall have been high potential tested prior to assembly into a module or assembly. Devices without shields will have been tested to reinforced insulation levels (3750 VAC).

2.1.8 Input Power

The average input power shall be 650 watts max. with the outputs loaded to a total of 400 watts.

2.1.9 Grounding

The green/yellow bonding ground wire is connected to the metal case and to transformer shields. It is internally connected to the main 5V return.

2.1.10 Ride-Through Capability

All outputs are maintained within stated regulation limits for a minimum of 6 milliseconds after input power interruption at low line (either voltage range). AC low may be asserted at the interruption; DC Low will follow a minimum of 5 milliseconds after AC Low. (See power-down protocol Section 5.3.) The delay from power interruption to AC low increases with higher line voltage (either range) and lighter loads.

2.1.11 Efficiency

The ratio of output DC power at the power supply terminals to the input real power shall be 0.65 minimum taken at 5V/60A in either input voltage range. This ratio may degrade to .60 when other outputs are loaded.

2.1.12 Input Over/Under Voltage Conditions

Undervoltage: The power supply is capable of withstanding any undervoltage condition for any duration without damage or degradation.

Overvoltage: The power supply is capable of withstanding an input overvoltage of 150 VAC (RMS (low voltage range)) or 300 VAC (RMS) (high voltage range) for one second maximum without sustaining any internal damage or degradation. The outputs are protected from overvoltage (within crowbar range) under these conditions. Overvoltage in excess of this may be damaging to the power supply.

2.1.13 Input Line Noise Susceptibility

2.1.13.1 Transients

Note: A spike is defined as a voltage transient, of either polarity and of either common or differential mode, with a rise time (10% to 90%) of 0.1 micro-seconds or less and a fall time (to 10%) of 10 micro-seconds or more. The average power of spikes shall not exceed 0.5 watts. They may occur at any phase value of the input AC, adding to the instantaneous value.

2.1.13.1.1 Low Energy Transients

In accordance with DEC-STD-102.7 Rev C.

2.1.13.1.2 High Energy Transients

In accordance with DEC-STD 102.7 Rev C.

2.1.13.2 Conducted Noise

In accordance with DEC-STD-102.7 Rev C.

FIGURE 2.1 DYNAMIC RESPONSE TIME

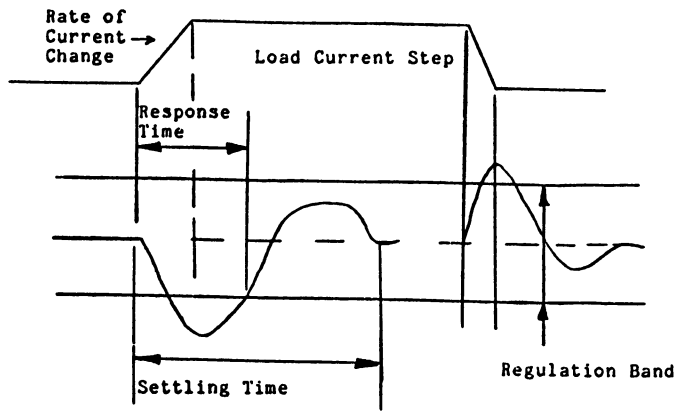

2.1.13.2 Radiated Noise

In accordance with DEC-STD-102.7 REV C.

2.2 Output Specifications

This power supply has a fixed 5.1V output on the major board with remote sense capability. Other outputs are provided from the regulator cards. These outputs are regulated at the card. (See Table I.)

2.2.1 Output Voltages (Table I)

For all outputs, The "Total Tolerance" is the root-sum-squared of errors due to:

Initial Tolerance
Dynamic Voltage Limits
Line/Load Changes Over Specified Range
Long Term Stability (1000 hours)
Temperature Drift
Ripple

The "Total Static Tolerance" is the root-sum-squared of errors due to:

Initial Tolerance
Line/Load Changes Over Specified Range
Long Term Stability (1000 hours)
Temperature Drift

2.2.2 Output Current (Table I)

The minimum and maximum currents for each output are specified in Table I. Where minimum loads are given, it indicates a minimum loading level necessary to keep other outputs within that channel grouping within regulation.

2.2.3 Wattage

The maximum wattage from each output is the product of the max rated current and the sum of the rated voltage and the total tolerance. The maximum power obtainable from combining all output powers in any application must be limited to 400 watts.

2.2.4 Line/Load Regulation

Table I shows the maximum deviation of each output for gradual line and load changes. The line voltage range for this parameter is the full range specified in 2.1.1. The load current variation is from minimum load to maximum rated load as specified in Table I. Gradual change is defined for this purpose as covering the range in more than one second.

2.2.5 Noise

Table I shows the maximum peak to peak noise which is present on each output. Noise must be measured at the output terminals of the power supply. The noise voltage is superimposed on the ripple voltage. Noise is defined as repetitive disturbances at a frequency greater than 170 KHZ.

2.2.6 Ripple

Table I shows the maximum peak-to-peak ripple voltage present on each output at the specified measurement points. The output deviations classified as ripple are repetitive disturbances in the frequency range of 1 Hz to 170 KHZ.

2.2.7 Dynamic Response Time

Table I shows the dynamic response characteristics of each output channel. The load current change, the allowable overshoot/undershoot, the response time and the settling time are specified for each channel. Each channel is to be subjected to a maximum rate of load current change of 0.5 Amperes per microsecond (increasing or decreasing load). The load changes are to occur as a 50% duty cycle square wave at a frequency of 100 hertz max; within the min/max values specified in Table I. Figure 2.1 shows a typical output wave form and defines all the above mentioned terms.

2.2.8 Temperature Coefficient

The maximum temperature coefficient of each output of this supply is ±0.02%/oC maximum over the operating ambient temperature range specified in 7.1.1. The measurement of temperature coefficient is to be made at 50% load on all outputs, nominal line voltage and after ten minute warm-up period with proper cooling air flowing.

2.2.9 Short Term Stability

The changes in the voltage at each output during warm-up after the initial turn-on will be less than 0.2% of the output measured. This measurement is made from one second after the supply is turned on until component temperature stability is reached (no later than one hour after turn on). All other parameters and environmental conditions must remain constant during this test.

2.2.10 Long Term Stability

The long term stability of each output of the supply is 0.1%/1000 hours maximum when measured under constant line, load and environmental conditions. The conditions must be within the limits called out in this specification.

2.2.11 Output Overload Protection

Table I shows the type of current limiting scheme and initiating point (limits) for each output.

The description of each type is below:

Pulsing	In this mode, the output is turned off for some fixed period of time after the initiation point is reached. Upon reactivation of the output, the output current builds; then, if the initiation point is reached again, the output turns off again. The average current in this mode is low, but with higher peaks.
Constant Current	At the initiation point, the output current is held constant and the voltage dropped to a level sufficient to maintain the fixed current level.
Foldback	In this mode, once the initiation point is reached, the voltage is lowered and the output current level also lowered. At a short circuit, the current is approximately 40% - 60% of the initiation point current.

The current limit on all outputs is configured such that the output will automatically recover to normal operation upon the removal of the overload.

All outputs are capable of operating for indefinite periods of time with short circuits on the output without causing damage or degradation to any portion or component of the supply.

TABLE I

	UNITS	#1	#2	#3
Output Designator		#1	#2	#3
Power Channel		1	2	2
Nominal Voltage	V.dc	+5.1	+12.3	+5.1
Rated Current (Max)	A.dc	60	3.0(Note 2)	15.0
Minimum Current	A.dc	0	0.8(Note 3)	2.0 (Note 1)
Total Tolerance	±mV.dc	230	1000	300
Total Static Tolerance	±mV.dc	150	850	275
Initial Tolerance	±mV.dc	100	500	100
Static Line/Load Regulation	±mV.dc	100	675	250
Ripple Voltage	mV (p-p)	100	200	75
Noise Voltage	mV (rms)	50	100	50
Dynamic Regulation (Figure 2) I	A	5	0.6	3.0
Over/Undershoot (max)	mV	150	500	100
Response Time (max)	ms	1.0	10	1.0
Settling Time	ms	1.5	15	1.5
Current Limit Type	--	Pulsing	Pulsing	Pulsing
Initiation Point(min/max)	A.dc	65-75	3-3.5	16.0/22.0
Short Ckt Current (max)	A (RMS)	5	2.0	8.0
(max)	A dc	---		
Overvoltage Trip Pt.	V dcmax/min	+6.5	+14.5/15.5	+5.4/6.0
Maximum Voltage	V dc	+7.0		6.5

Note 1: The minimum load specified for the +5.1V output is required to maintain reg. on the +12.3V output. The 5.1V output will operate at no load but the +12.3V output will be below spec.

Note 2: Max continuous output current for +12.3V output is 3.0 amps. Intermittent currents of up to 6.0 amps may be drawn for several seconds if the duty cycle is kept below 2%. If continuous currents of greater than 3.0 amps are drawn a thermal protection switch will shut the supply down.

Note 3: The minimum load specified for the +12.3V output is required to maintain regulation. If the minimum load is below that specified the +12.3V output can be out of regulation on the high side. If the load falls below 0.75A the 12.3V output can rise sufficiently to cause an overvoltage condition and the module will shut down. See A-SP-H7213, paragraph 2.2.13.

TABLE I (Cont'd)

	Units	High Range #4	High Range #5
Output Designator		#4	#5
Power Channel		3	3
Nominal Voltage	V.dc	+15.0	-15.0
Rated Current (max)	A.dc	2.0	3.0
Minimum Current	A.dc	0	0.3
Total Tolerance	±mV.dc	580	700
Total Static Tolerance	±mV.dc	500	630
Initial Tolerance	±mV.dc	450	550
Static Line/Load Regulation	±mV.dc	175	275
Ripple Voltage	mV (p-p)	200	300
Noise Voltage	mV (rms)	150	150
Dynamic Regulation: (Figure 2.1) Current Step	A	.2	.3
Under/Overshoot (max)	mV	200	50
Response Time	ms	0.5	0.25
Settling Time	ms	0.5	0.25
Current Limit Type	--	Foldback	Foldback
Initiation Point	A.dc	2.1-3.0	3.1-4.0
Short Ckt Current (max)	A (RMS)	---	---
(max)	A dc	0.5	1.5
Overvoltage Trip Point min/max	V dc (max)	+17.0/19.1	-16.7/18.8
Maximum Voltage	V dc	+21.0	-21.0

2.2.12 Overvoltage Protection

All outputs except designator 2, table 1, have a crowbar protective device to prevent the voltage from exceeding the maximum fault voltage level indicated in Table I. The crowbars will be capable of discharging all internal and rated external capacitances. The maximum response time of the protection is 2 microseconds. The maximum voltage is not exceeded during the response time.

All overvoltage fault circuits (crowbars) are latching. The latched-off condition can be reset by removal of AC power for at least one minute or by removal of Power Request and Standby signals (console switch to "off").

2.2.13 Output Adjustment

All outputs are fixed with no means of adjustment. Channel 3 outputs are available for ±15V or ±12V. This selection is by choosing a variation of the module.

2.2.14 Output Sequencing

None.

2.2.15 Voltage Margins

There are no margin circuits or capability provided.

2.3 D. C. Input - Battery Backup Power

P1 is the inlet connector for Battery Backup Power. It is common with the bulk DC on the major board which is derived from line rectification. It is not isolated from the AC line. Proper cable mounting, shielding and insulation must be exercised when using this input to avoid circumventing the AC line filter and preserve signal integrity in adjacent cables. In systems that are high potential tested, this input is raised to the high voltage.

Note: This input is in common with the internal bulk DC voltage. There is no fusing or limiting provided. High surge and average currents are therefore possible from this interface, as with any 240V line connection.

There is internally stored energy available at this connection for several seconds after power removal following some internal failures. These two terminals must not be short-circuited together or to ground to discharge this energy.

This input is to be used only with isolated BBU units such as the H7240 series battery converters.

CHAPTER 3
ELECTROMAGNETIC INTERFERENCE

3.1 Limits of Equipment Generated Interference

AC Power Lines
Compliance with FCC A and VDE A limit is provided by the line filter within this power supply.

CHAPTER 4
APPLICATION SPECIFICATIONS

4.1 Input - Voltage Current and Cord Requirements

The input voltage range is selected with a screwdriver operated slide switch on the unit. The inlet connector is a three pin (IEC) connector. A 14 guage three wire cord is required. This cord is not supplied with the power supply. Removal of a small protective cover is required for operation of the line select switch.

4.2 Output Voltage, Current and Harness Requirements

The main 5 volt output is available at the connection blocks on the unit. A suitable bus bar or sufficient size wire is required to conduct the current used by the load and restrict the voltage drop to 100 mV between output terminals and remote voltage sense points for each lead, supply and return. Other voltages are available at the backplane connector on the distribution board (see D-IC-H7202). Voltage drops for these are determined by user requirements.

4.3 Load Duty Cycle

The power supply will operate within all specification limits continuously with any outputs loaded to full rated current, provided total DC output power does not exceed 400W.

4.4 Paralleling Requirements

Operation of this supply connected in parallel with any other power supply is not permissible.

4.5 Load Capacitance

The maximum external capacitance added in parallel at the load (for decoupling, etc.) for each output is:

+5V	: 500 uf	+15V	: 270 uf
+12V	: 100 uf	-15V	: 270 uf
+5VB	: 500 uf		

These limits are necessary to insure system stability.

4.6 Load Connection Characteristics

The interconnection circuit from the output to the remote sense attachment points is restricted in inductance and capacitance to assure system stability as follows:

maximum inductance	(Normal mode)	50	Microhenries
maximum capacitance	--	500	Microfarads
maximum LC product	250×10^{-12}		FARAD-HENRIES

4.7 Remote Sense

The main 5V output has remote sense capability. The maximum sense line length is one meter (each line). A capacitor of 0.1 uF is required at the sense line termination at the load. The sense lines are pin 6 (+) and 8 (-) in connector J2. The power supply output is protected from opening or shorting the sense lines. Crowbar is considered adequate protection for this purpose. Regulation limits are not guaranteed if the sense line resistance from the sense pins to the 5V output exceeds 0.5ohm (each line). In the event of an open sense line, regulation takes place at output assembly on the H7200 power module.

4.8 Battery Back-Up Requirements

This power supply is capable of operating from a battery back-up with a 200V output interfacing with the primary bus, such as the H7240 series units. The power supply is capable of operation in this mode for 30 seconds maximum at rated load and temperature without forced air cooling. External forced air is required for operation for longer periods in this mode.

This unit is internally programmed to back up Channel 2 outputs (memory regulator). These are also the "standby" outputs (See Table I and 5.2.2).

4.9 Return Wire Voltage Offsets

The return lines for each power channel must be connected together externally for normal, safe operation. This is normally done at the load. In such cases, the difference in return wire voltage drops due to distribution losses must be less than 350 mV for any combination of two of the three power channels. This is necessary to prevent shortening the life of the internal ground isolation resistors between the power channel control circuits.

CHAPTER 5
SIGNAL SPECIFICATIONS

5.1 Output Signals

5.1.1 DC Low

This signal when asserted (low state) indicates that the dc voltage at the input bus is not adequate to maintain regulation of the outputs, and that output DC power is about to drop. All outputs will remain in regulation for 1 millisecond minimum after this signal is asserted.

The output signal is provided on two lines leading to an ungrounded (floating) FET. On power turn-on this signal is asserted until regulation is reached.

Electrical Characteristics:

Asserted (low) - Capable of sinking 50 mA. at 0.4Vmax.

Un-asserted (high) - Output impedance of 100 K ohms min, 15V maximum applied voltage.

5.1.2 AC Low

This signal when asserted (low state) indicates that the dc voltage at the input bus is at or near the value necessary to guarantee the 5 mS. hold-up prior to DC low. This value is below the specified line voltage but above the minimum required for regulation. When un-asserted (high) this signal indicates adequate input voltage.

On power turn-on this signal is asserted until after DC low is de-asserted. On power turn-off this signal is asserted 5 milli-seconds minimum prior to DC low (See Figure 5.2, 5.3).

Electrical characteristics are the same as DC low (see 5.1.1). The return lead (FET source) is common with DC low.

5.1.3 Line Clock Signal

This signal is a timing reference at the frequency of and synchronous with the AC line. Its waveform is a square wave of approximately 50% duty cycle. Its source is an open-collector transistor sinking 20 mA. with 0.4V maximum in the low state and high impedance in the high state. High state maximum applied voltage is 15V, minimum impedance is 100 K ohms. The return lead is common with DC low (See Figure 5.1).

Note: This signal does not function when power is derived from battery back-up.

5.1.4 Battery Back-Up Enable

This signal when true (high state) asserts that a valid BBU condition exists in the power supply. This enables the BBU unit to assume the "ready" state which permits fast response to a power fail condition through the BBU request signal (para. 5.1.5).

When false, a non valid condition is indicated such as thermal shutdown or output failure. This allows the BBU unit to assume the "Off" state which does not allow fast response and permits minimum battery drain. A transition from True to False while BBU unit is supplying power, terminates the backup condition, removing power.

Electrical Characteristics:

True (high state): A voltage source of +12V (10.5 min, +14.5 max) at 10 mA. max current.

False (low state): High impedance source of greater than 100 K-ohms to +14.5V maximum.

5.1.5 Battery Back-Up Request

This is a momentary indication of a drop in the bulk DC power input to the power stages indicating input AC has dropped. This signal is asserted simultaneously with AC low but is de-asserted when the bulk DC is increased due to the input of battery derived power (See figure 5.4). The minimum assertion time is greater than 1 millisecond.

Electrical Characteristics are the same as Battery Back-up Enable (para. 5.1.4).

5.1.6 Boot Enable

This signal is valid on power up between de-assertion of DC low and AC low. When true (high state) it indicates that memory voltage(s) had been good and uninterrupted since assertion of DC low on power down. When false (low state) it indicates that memory voltages had been interrupted. Electrical characteristics are the same as DC low.

5.2 Input Signals

5.2.1 DEC Power Bus

The power supply responds to these two signals (Power Request and Total Shutdown) in accordance with DEC STD 123.

Power Request: All outputs are inhibited until this signal is pulled low externally, except for the Standby mode.

Total Shutdown: All outputs are inhibited whenever this signal is pulled low externally. This signal overrides all other signals.

Normal output signal and power output sequencing per section 5.3 occurs when these signals are used.

5.2.2 Standby (Console Signal)

This input enables the "Standby" outputs when pulled low externally. It overrides Power Request but not Total Shutdown. "Standby" is internally programmed to be the "Channel 2" outputs (memory regulator) (See Table I).

Low State (asserted): Less than 1.0V
Source Current is -1.0 mA. max.

High State (unasserted): Greater than 10V,
Sink current: 1 uA. max.

5.2.3 Module Enable

This signal when asserted (low state) indicates that primary power is coming from the battery converter. This signal forces a "standby" state by internally de-asserting power request. This shuts down the Channel 1 and 3 outputs. An AC Low - DC Low sequence precedes the fall in actual DC output. See figure 5.4.

Electrical Characteristics:

Low State (asserted): External low impedance to power supply return capable of sinking 3 mA. minimum with a max. voltage of 1 Volt.

High State (unasserted): High impedance, capable of blocking +15 V with 1 micro amp max. leakage.

5.2.4 AIR FAULT:

This signal is a shutdown input with internal latch intended for use with external environmental sensors. It consists of a pull-up line and fault signal which must be connected together externally to permit normal operation (see Figure 5). When the AIR FAULT line is pulled low to P.S. return, all DC power is removed after an AC low - DC Low sequence. An internal latch is also set, holding this condition until Power Request and Standby inputs are de-asserted ("Key OFF"). Under default conditions with both lines open, the Power Supply will not operate.

The minimum fault assertion time to guarantee a latch is 100 microseconds.

Electrical Characteristics:

Asserted (low state): Low impedance to P.S. return capable of sinking 10 mA. with a maximum Voltage of 1 Volt.

Unasserted (high state): High impedance capable of blocking 15 VDC with a max. leakage of 1 Microamp.

Note: Electrical Characteristics apply when "pull-up" and "fault" are connected together.

5.3 Power-Up/Power-Down Sequencing

See Figure 5.2 for sequence of signals and events oon power-up and power-down.

FIGURE 5.1 LINE CLOCK SIGNAL

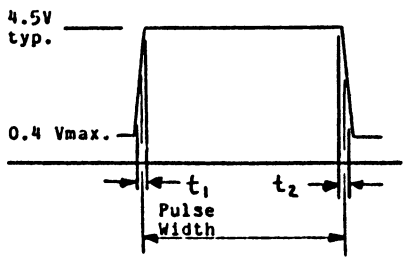

Pulse width approximately 1/2 line cycle:
50Hz line 10 ms.
60Hz line 8.3 ms.

t1, t2 < 200 ns

ENGINEERING SPECIFICATION — CONTINUATION SHEET

TITLE H7202B POWER SUPPLY ENGINEERING SPECIFICATION

FIGURE 5.2

POWER UP SEQUENCING: AC LINE

NOTE: Power Request Asserted

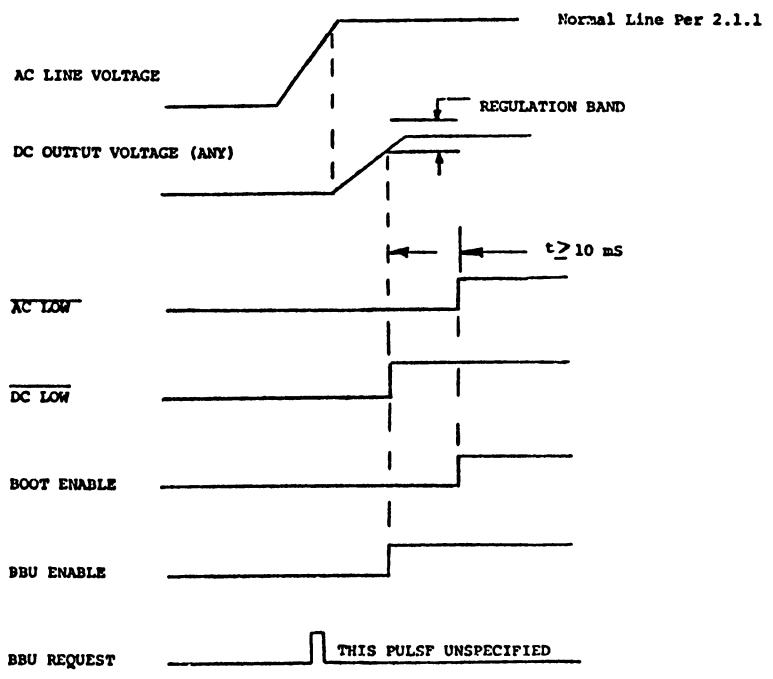

FIGURE 5.3

POWER DOWN SEQUENCING - AC LINE

NOTE: POWER REQUEST ASSERTED, NO BBU CONNECTED

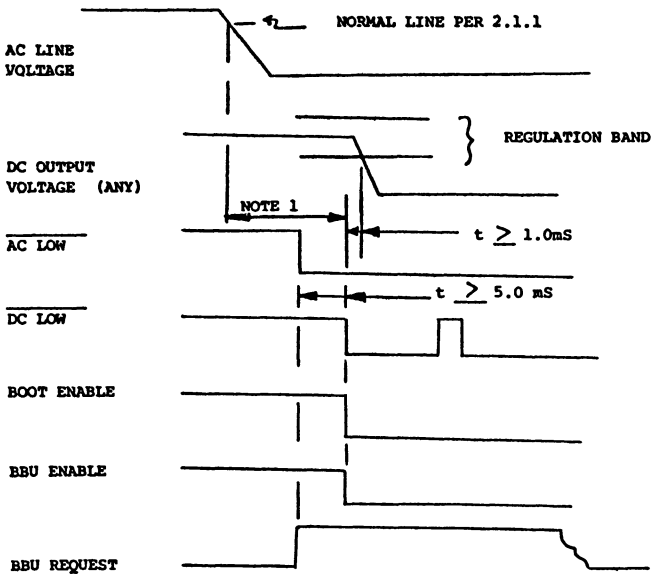

NOTE 1: This interval varies:

For 400 W total load: 0mS minimum (low line)
5mS typical (low line)
50mS typical (nominal line)

For less total load, this interval increases.

FIGURE 5.4

POWER DOWN TO POWER UP SEQUENCING WITH BBU CONNECTED (H7240 or EQUIVALENT)

NOTE: POWER REQUEST ASSERTED

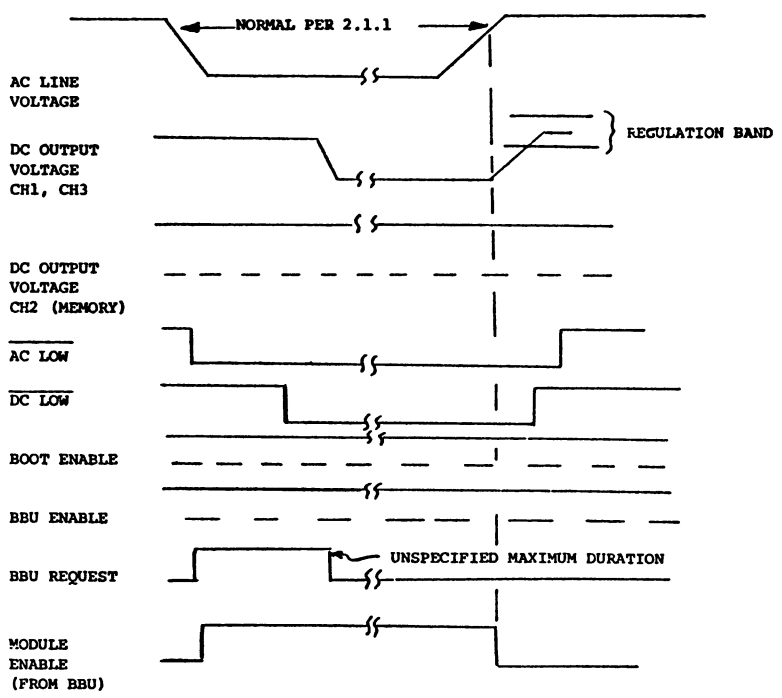

FIGURE 5.5

POWER DOWN TO POWER UP SEQUENCING - CONTROL SIGNALS

A. STANDBY ASSERTED

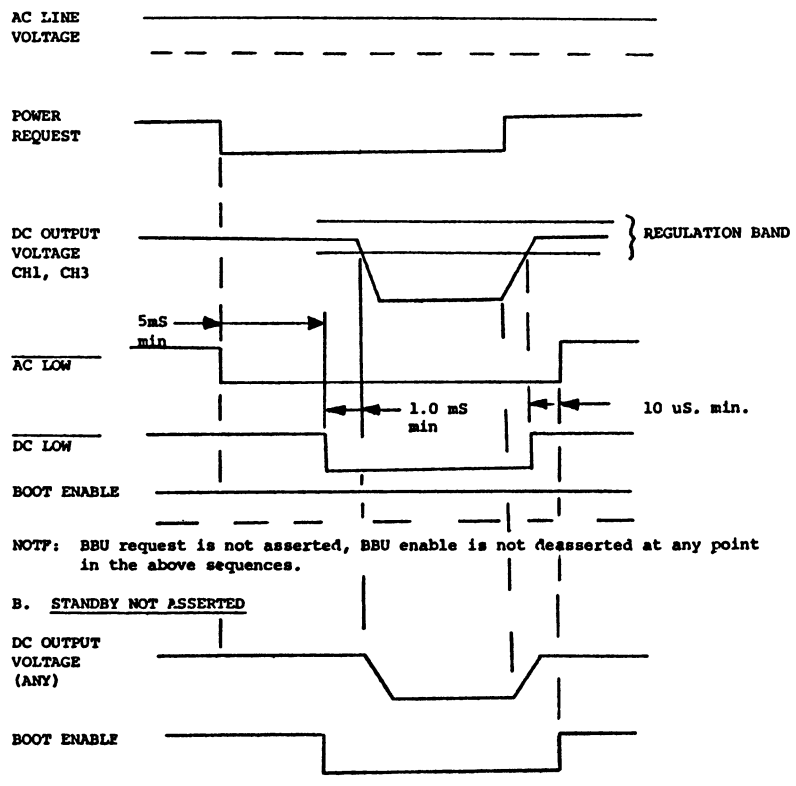

NOTE: BBU request is not asserted, BBU enable is not deasserted at any point in the above sequences.

B. STANDBY NOT ASSERTED

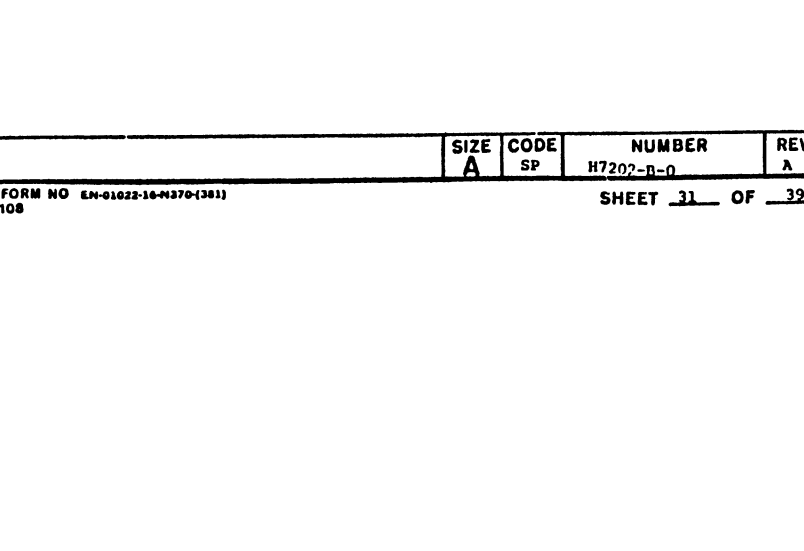

5.4 Status Indicators

Three red light emitting diodes indicate the status of each of the three power channels. These are visible through the connection access cover and labeled. Each LED will be on when that channel is on and outputs are within normal range.

Labels are as follows:

Main +5V	OK	(Channel 1)
Memory Power	OK	(Channel 2)
Com. Power	OK	(Channel 3)

CHAPTER 6
MECHANICAL AND PHYSICAL SPECIFICATIONS

6.1 Size

The overall dimensions are 5 X 6.25 X 21 inches nominal, conforming to the dimensions shown in Figure 6.1.

6.2 Weight

The power supply with housing has a maximum weight of 8.2 kilograms (18lbs).

6.3 Mounting

Through threaded inserts comptaible with BA11-H and BA11-Z boxes.

6.4 Cooling

Externally supplied forced air at 400 linear feet per minute (20 m/s) is required to properly cool this unit when operating at full load and max. temperature. Volume requirement is approximately 80 cubic feet per minute. A suitable air filter is required to prevent dirt accumulation inside the unit. (See 7.6)

6.5 Thermal Protection

The power supply is self-protecting against the loss of adequate cooling air or excessive temperature by internal temperature switches which shut down the power supply. This sets an internal latch which is externally reset by de-asserting both power request and standby inputs (console key to OFF).

6.6 Accessibility

6.6.1 Connections:

All power and signal connections are available at the rear of the unit. A protective clear cover must be removed to access many of the power and signal connectors.

6.6.2 Service:

To access the working internal modules, the input power connector P2 must be disconnected to allow the top cover to be removed. This disconnects all HV power from the input harness. Channel 2 and 3 power modules may be removed at this point.

To remove the H7200 power module, the AC input panel must be removed, as well as the mounting screws on the bottom of the unit as well as the high current cables.

6.7 Identification Stickers

Special markings or compliance stickers are placed on the outside of the housing near the circuit breaker access, adjacent to the AC inlet connector and on the top cover.

6.8 Input/Output Connectors

6.8.1 Line Interfaces

Interfaces at AC Line potential (AC input line, battery back-up power) are through connectors in the chassis at the rear of the unit. AC line input is directly into the line filter.

6.8.2 Main Output

5V, 60A output is through screw and insert connections on the rear side corners. Interface to the load is then through flex-print (wire could also be used).

6.8.3 Other Interfaces

All other interfaces are from connectors on the distribution board under the rear protective cover. Interfaces included are:

(J2) Backplane (by flexprint) - includes DC power other than 5V/60A, and processor signals.

(J3) Fan: Power for DC fans and signals to and from air flow sensor.

(J7) Fan: Power for additional DC fan.

(J4) Battery Back-up: Signals to Battery Back-up unit.

(J6) DEC Power Bus.

(J1) Console - Control signals.

6.8.4 DEC Power Bus

These signals are carried out from the distribution board (J6) to the chassis where the standard 3 pin connector is accessible.

6.9 PACKAGING

Shipment of this unit requires that proper containers be used:

bulk shipment	3700635-00
single unit shipment	3700635-01

(See A-SP-3700635-0-0)

FIGURE 6.1
MECHANICAL CONFIGURATION

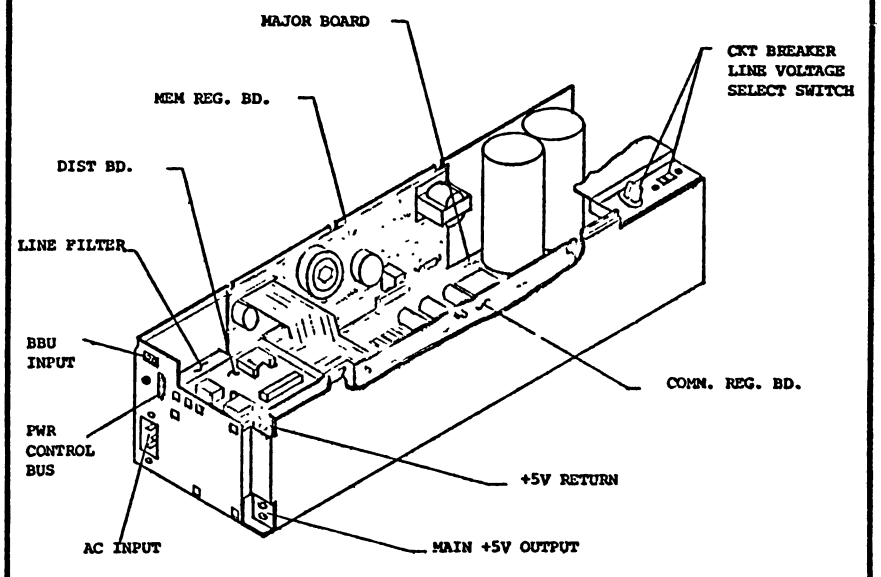

NOTES:

1. View shown with top cover and access panel removed.
2. Overall dimensions of power supply 21.00" X 6.25" X 5.00"

CHAPTER 7
ENVIRONMENTAL SPECIFICATIONS

General: In compliance with DEC STD 102, rev C class C.

7.1 Temperature

7.1.1 Operating Ambient Temperature Range

5 C to 55 C (intended for use in equipment rated DEC-STD 102, Class C).

7.1.2 Storage Temperature Range

-40 C to + 70 C.

7.2 Humidity

Per DEC Standard 102, Class C, Paragraph 3.0.

7.3 Altitude

7.3.1 Operating Limit

22.2 in Hg. (8,000 ft).

7.3.2 Storage Limit

8.9 in. Hg. (30,000 ft.).

7.4 Vibration

Per DEC Standard 102, Class C, Paragraph 6.0.

7.5 Mechanical Shock

Per DEC Standard 102, Pargraph 5.0.

7.6 Dirt Protection

An external filter for cooling air is required to prevent interanl dirt accumulation. This is necessary to preserve the integrity of the insulation systems.

CHAPTER 8
RELIABILITY

8.1 Life Expectancy

The design goal for life expectancy is 10 years.

8.2 Mean Time Between Failure

The deisgn MTBF is greater than 27,000 hours based on a parts count calculation and data from MIL-HBK-217B and DEC STD 139,

CHAPTER 9
SAFETY

The power supply as specified herein shall be UL recognized, CSA certified and comply with DEC STD 119 REV C.

9.1 Electrical

The power supply and its application (including battery back-up) shall be listed per UL-478-Electronic Data Processing Units and Systems and meet UL 1012 - Power Supplies.

The power supply and its application (including battery back-up) shall meet the following safety codes:

CSA C22.2	No. 154	Canadian Electrical Code, Part II, Safety Standards for Electircal Equipment.
VDE 0804		Regulations for Telecommunication Apparatus including Information Processing Equipment.
IEC 435		Safety of Data Processing Equipment.

9.2 Regulatory Bodies

See DEC Standards 60 and 119.

9.3 Isolation

See Section 2.1.7 of this specification. Refer also to DEC Standards 60 and 119.

9.4 Grounding

The ground wire (green/yellow stripe) is connected to the power supply frame, housing and sheilds. The 5V return lead is internally connected to the chasses and ground wire.

This drawing and specifications, herein, are the property of Digital Equipment Corporation and shall not be reproduced or copied or used in whole or in part as the basis for the manufacture or sale of items without written permission

DIGITAL EQUIPMENT CORPORATION
MAYNARD MASSACHUSETTS

PACKAGING INSTRUCTION REV: _____ DATE: _____

TITLE
PKG POWER SUPPLY H7202/H7200/H7211/H7213

LEGEND

VARIATION	USED ON	PACKAGE TYPE	REMARKS
3700635-01	H7202	CUSTOMER	
3700635-02	H7202	INTERPLANT	BULK
3700635-03	H7200	CUSTOMER	
3700635-04	H7200	INTERPLANT	BULK
3700635-05	H7211/H7213	CUSTOMER	
3700635-06	H7211/H7213	INTERPLANT	BULK

PARTS LIST 37000635-01 THROUGH 3700635-06

REFER TO OFF-SHEET PARTS LIST K-PL-3700635-0-DBP

PACKAGING INSTRUCTIONS 3700635-01

STEP PROCEDURE FIGURE 1

1. WRAP THE FIVE PANEL FOLDER (9906851-00) AROUND THE H7202-B POWER SUPPLY AND TAPE IT WITH CARTON SEALING TAPE (9905729-00).
2. INSTALL A MOLDED FOAM PAD (9990010-00) ONTO EACH END OF THE FIVE PANEL FOLDER.
3. SET UP THE FULL OVERLAP CARTON (9906849-00) USING ONE (1) STRIP OF CARTON SEALING TAPE ALONG THE LENGTH AND ONE (1) STRIP ALONG EACH SIDE.
4. POSITION THE PRE-PACKED H7202-B POWER SUPPLY INTO THE FULL OVERLAP CARTON.
5. CLOSE AND SEAL THE FULL OVERLAP CARTON USING ONE (1) STRIP OF CARTON SEALING TAPE ALONG EACH SIDE.

SHEETS 5 THRU 10 "C" SIZE

ENG	APPD	SIZE	CODE	NUMBER	REV
RS Snell 7/82	Jean Barrett 7/1/82	A	PA	3700635-0-0	A

EN-01189-16-0000(33L)

SHEET 1 OF 10

PACKAGING INSTRUCTION — CONTINUATION SHEET

TITLE
PKG POWER SUPPLY H7202/H7200/H7211/H7213

PACKAGING INSTRUCTIONS 3700635-02

STEP PROCEDURE FIGURE 2

1. SQUARE AND SET UP THE HALF SLOTTED CARTON (9906856-01), USING ONE (1) STRIP OF CARTON SEALING TAPE DOWN THE CENTER EXTENDING THREE (3) INCHES DOWN EACH SIDE, AND POSITION IT ONTO THE GENERAL PURPOSE PALLET (9906199-00).
2. FIT THE GLUED TUBE (9906856-04) INTO THE HALF SLOTTED CARTON.
3. AFTER SETTING TWO (2) MOLDED FOAM PADS (9990015-00) INTO THE HALF SLOTTED CARTON, ARRANGE THE ASSEMBLED AND NESTED DIVIDER (9906856-03) INTO THE CARTON.
4. INSTALL THE H7202-B POWER SUPPLY INTO EACH OF THE DIVIDER CELLS (48 TOTAL), MAKING SURE THAT THE CAPACITOR IS ON THE TOP.
5. PLACE THE TELESCOPE CAP (9906856-02) ONTO THE HALF SLOTTED CARTON.
6. STRAP THE TELESCOPE CARTON ASSEMBLY TO THE PALLET USING TWO (2) POLYESTER STRAPS (9905734-00).

PACKAGING INSTRUCTIONS 3700635-03

STEP PROCEDURE FIGURE 3

1. WRAP THE DIE CUT CARTON (9906853-00) AROUND THE H7200 POWER SUPPLY AND TAPE IT WITH CARTON SEALING TAPE (9905729-00).
2. INSTALL A MODLED FOAM PAD (9990012-00) ONTO EACH END OF THE DIE CUT CARTON.
3. SET UP THE FULL OVERLAP CARTON (9906852-00) USING ONE (1) STRIP OF CARTON SEALING TAPE ALONG THE LENGTH AND ONE (1) STRIP ALONG EACH SIDE.
4. POSITION THE PRE-PACKED H7200 POWER SUPPLY INTO THE FULL OVERLAP CARTON.
5. CLOSE AND SEAL THE FULL OVERLAP CARTON USING ONE (1) STRIP OF CARTON SEALING TAPE ALONG THE LENGTH AND ONE (1) STRIP ALONG EACH SIDE.

SIZE	CODE	NUMBER	REV
A	PA	3700635-0-0	A

EN-01190-16-REV A(33L)

SHEET 2 OF 10

PACKAGING INSTRUCTION — CONTINUATION SHEET

TITLE
PKG POWER SUPPLY H7202/H7200/H7211/H7213

PACKAGING INSTRUCTIONS 37000635-04

STEP PROCEDURE FIGURE 4

1. WRAP THE DIE CUT CARTON (9906853-00) AROUND THE H7200 POWER SUPPLY AND TAPE WITH CARTON SEALING TAPE (9905729-00).
2. SQUARE AND SET UP THE HALF SLOTTED CARTON (9906856-01) USING ONE (1) STRIP OF CARTON SEALING TAPE DOWN THE CENTER AND EXTENDING IT THREE 93) INCHES DOWN EACH SIDE; POSITION IT ONTO THE GENERAL PURPOSE PALLET (9906199-00).
3. FIT THE GLUED TUBE (9906856-04) INTO THE HALF SLOTTED CARTON.
4. PLACE TWO (2) MOLDED FOAM PADS (9990015-00) INTO THE HALF SLOTTED CARTON.
5. ARRANGE EIGHTY-EIGHT (88) H7200 POWER SUPPLIES,PRE-WRAPPED PER STEP ONE, PER PALLET PATTERN CONFIGURATION.
6. FIT THE TELESCOPE CAP (9906856-02) ONTO THE HALF SLOTTED CARTON.
7. STRAP THE TELESCOPE CARTON ASSEMBLY TO THE PALLET USING TWO (2) POLYESTER STRAPS (9905734-00).

PACKAGING INSTRUCTIONS 3700635-05

STEP PROCEDURE FIGURE 5

1. OPEN THE ALREADY SET-UP DIE CUT CARTON WITH CONVOLUTED FOAM (9906858-00).
2. PLACE EITHER THE H7211 OR H7213 POWER SUPPLY (COMPONENT SIDE DOWN) INTO THE DIE CUT CARTON WITH FOAM.
3. CLOSE THE SELF-LOCKING DIE CUT CARTON WITH ALL FLAPS INSIDE.

SIZE	CODE	NUMBER	REV
A	PA	3700635-0-0	A

EN-01190-16-REV A(33L)

SHEET 3 OF 10

PACKAGING INSTRUCTION — CONTINUATION SHEET

TITLE
PKG POWER SUPPLY H7202/H7200/H7211/H7213

PACKAGING INSTRUCTIONS 3700635-06

STEP PROCEDURE FIGURE 6

1. ON A GENERAL PURPOSE PALLET (9906199-00) PLACE TWENTY-ONE (21) 3 X 7 PRE-PACKED H7211 OR H7213 POWER SUPPLIES PER PALLET CONFIGURATION.
2. CONTINUE STACKING UNTIL THERE ARE EIGHT (8) TIERS HIGH.
3. USING ANGLEBOARDS (9906185-14) POLYESTER STRAPPING (9905734-00), STRAP THE POWER SUPPLIES TO THE PALLET.

SIZE	CODE	NUMBER	REV
A	PA	3700635-0-0	A

EN-01190-16-REV A(33L)

SHEET 4 OF 10

"THIS DRAWING AND SPECIFICATIONS, HEREIN, ARE THE PROPERTY OF DIGITAL EQUIPMENT CORPORATION AND SHALL NOT BE REPRODUCED OR COPIED OR USED IN WHOLE OR IN PART AS THE BASIS FOR THE MANUFACTURE OR SALE OF ITEMS WITHOUT WRITTEN PERMISSION.
COPYRIGHT © 1981 DIGITAL EQUIPMENT CORPORATION"

SIZE C | CODE PA | NUMBER 3700635-0-0 | REV. A

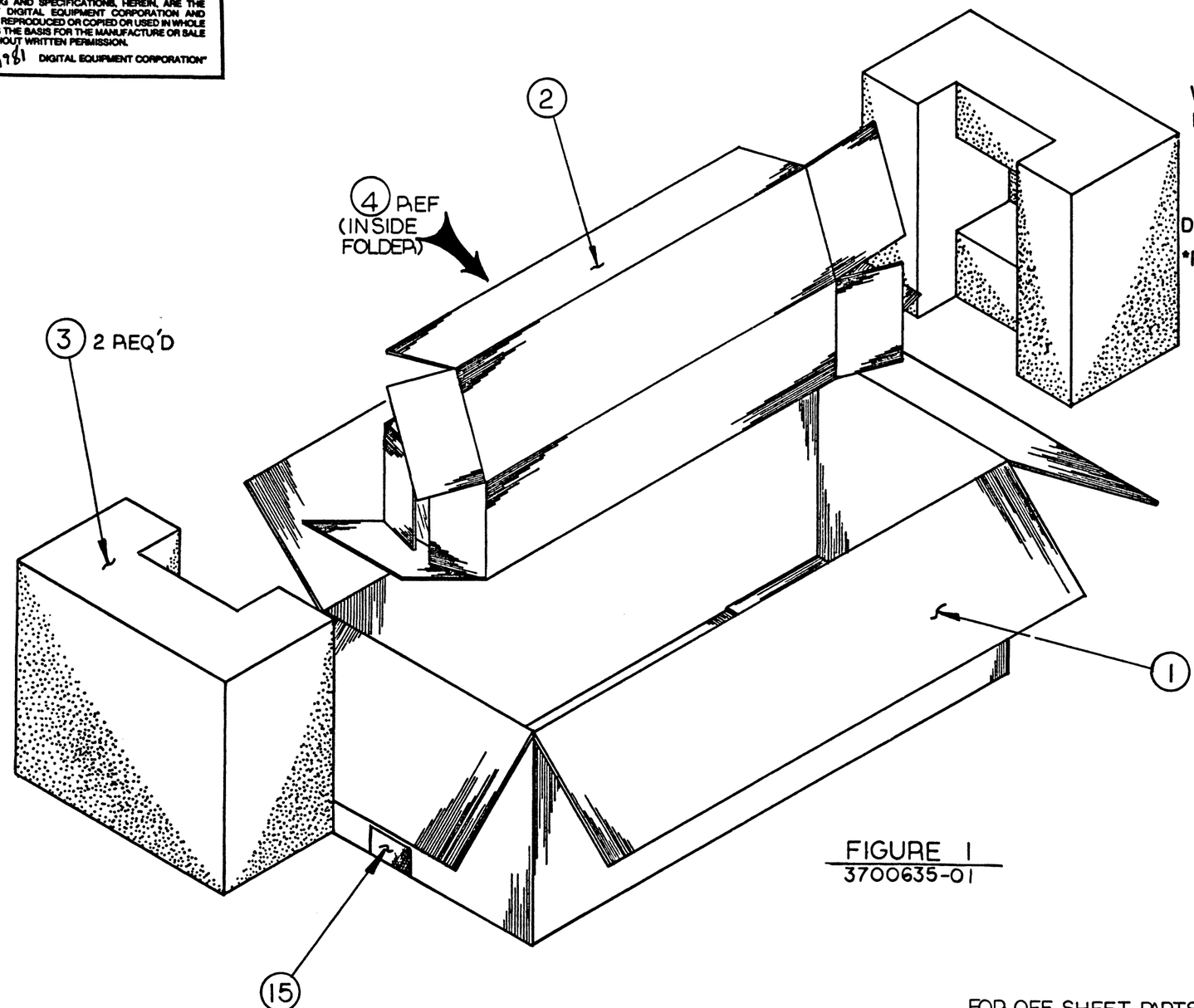

FIGURE 1
3700635-01

PACKAGE DIMENSIONS, WEIGHTS & PLASTIC PACKING MATERIAL

	USA	METRIC
WEIGHT	24.0 LBS.	10.9 KG.
LENGTH	28.25 IN.	718 MM
WIDTH	11.81 IN.	300 MM
HEIGHT	14.25 IN.	362 MM
CUBE	27.5 CU. FT.	0.08 CU.M
DENSITY	8.7 LBS./CU. FT.	140 KG/CU.M
*PLASTIC	% VOL	% WT	TYPE

*% VOLUME (EXPANDED)
% WEIGHT (UNEXPANDED)

FOR OFF SHEET PARTS LIST SEE K PL 3700635-0-DBP

DRN GYORKE	DATE 5/4/82	TITLE digital
CHK'D. J. BARRETT	DATE 7/82	PKG POWER SUPPLY H7202/H7200
DES ENG. R. SPINELLI	DATE 6/82	
RESP ENG. R. SPINELLI	DATE 6/82	
MFG ENG NONE	DATE —	
NEXT HIGHER DOC.		DOCUMENT NUMBER: SIZE C | CODE PA | NUMBER 3700635-0-0 | REV. A
		SCALE NONE | SHEET 5 OF 10

REVISION HISTORY

REV.	ECO NUMBER	DATE

DRC 1118

"THIS DRAWING AND SPECIFICATIONS, HEREIN, ARE THE PROPERTY OF DIGITAL EQUIPMENT CORPORATION AND SHALL NOT BE REPRODUCED OR COPIED OR USED IN WHOLE OR IN PART AS THE BASIS FOR THE MANUFACTURE OR SALE OF ITEMS WITHOUT WRITTEN PERMISSION.
COPYRIGHT © DIGITAL EQUIPMENT CORPORATION"

SIZE C | CODE PA | NUMBER 3700635-0-0 | REV A

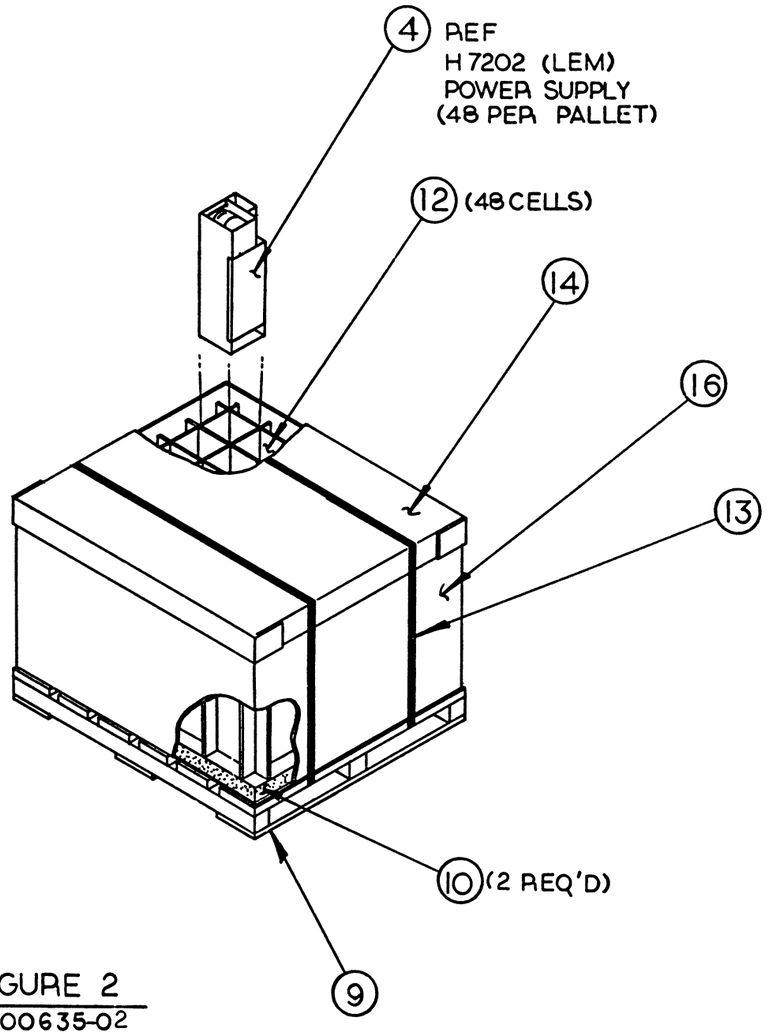

FIGURE 2
3700635-02

PACKAGE DIMENSIONS, WEIGHTS & PLASTIC PACKING MATERIAL

	USA	METRIC
WEIGHT	1000.0 LBS.	454.0 KG.
LENGTH	48.00 IN.	1219 MM
WIDTH	42.00 IN.	1067 MM
HEIGHT	35.00 IN.	889 MM
CUBE	40.8 CU. FT.	1.16 CU.M
DENSITY	24.5 LBS./CU. FT.	392 KG/CU.M
*PLASTIC	% VOL / % WT	TYPE

*% VOLUME (EXPANDED)
% WEIGHT (UNEXPANDED)

FOR OFF SHEET PARTS LIST SEE K-PL-3700635-0-DBP

DRN. Gyorke	DATE 5/12/87	TITLE digital
CHK'D.	DATE	PKG
DES ENG.	DATE	POWER SUPPLY
RESP ENG.	DATE	H7202 / H7200
MFG ENG.	DATE	
NEXT HIGHER DOC.		DOCUMENT NUMBER: SIZE C | CODE PA | NUMBER 3700635-0-0 | REV A
		SCALE | SHEET 6 OF 10

REVISION HISTORY		
REV.	ECO NUMBER	DATE

DRC 1118

"THIS DRAWING AND SPECIFICATIONS, HEREIN, ARE THE PROPERTY OF DIGITAL EQUIPMENT CORPORATION AND SHALL NOT BE REPRODUCED OR COPIED OR USED IN WHOLE OR IN PART AS THE BASIS FOR THE MANUFACTURE OR SALE OF ITEMS WITHOUT WRITTEN PERMISSION.
COPYRIGHT © 1982 DIGITAL EQUIPMENT CORPORATION"

SIZE C | CODE PA | NUMBER 3700635-0-0 | REV A

PACKAGE DIMENSIONS, WEIGHTS & PLASTIC PACKING MATERIAL

	USA		METRIC	
WEIGHT	10.0	LBS.	4.5	KG.
LENGTH	22.88	IN.	581	MM
WIDTH	11.50	IN.	292	MM
HEIGHT	13.88	IN.	353	MM
CUBE	2.11	CU. FT.	0.06	CU.M
DENSITY	4.7 LBS./CU. FT.		76	KG/CU.M
*PLASTIC	% VOL	% WT		TYPE

*% VOLUME (EXPANDED)
% WEIGHT (UNEXPANDED)

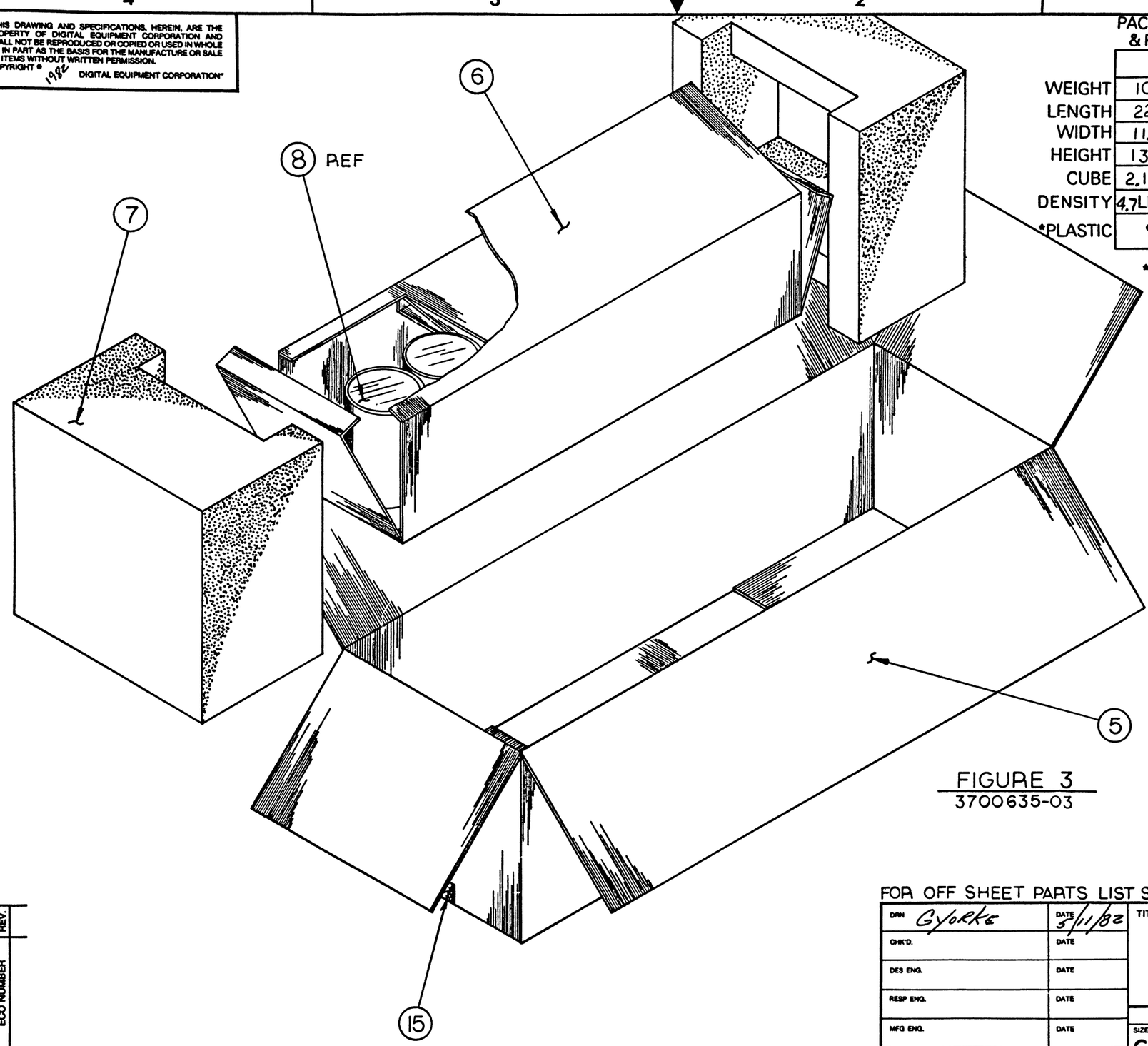

FIGURE 3
3700635-03

FOR OFF SHEET PARTS LIST SEE K-PL-3700635-0-DBP

DRN	Gyorke	DATE 3/11/82
CHK'D.		DATE
DES ENG.		DATE
RESP ENG.		DATE
MFG ENG.		DATE
NEXT HIGHER DOC.		

TITLE: digital
PKG
POWER SUPPLY
H7202/H7200

DOCUMENT NUMBER
SIZE C | CODE PA | NUMBER 3700635-0-0 | REV A
SCALE | SHEET 7 OF 10

REVISION HISTORY

REV.	ECO NUMBER	DATE

DRC 1118

"THIS DRAWING AND SPECIFICATIONS, HEREIN, ARE THE PROPERTY OF DIGITAL EQUIPMENT CORPORATION AND SHALL NOT BE REPRODUCED OR COPIED OR USED IN WHOLE OR IN PART AS THE BASIS FOR THE MANUFACTURE OR SALE OF ITEMS WITHOUT WRITTEN PERMISSION.
COPYRIGHT © 1982 DIGITAL EQUIPMENT CORPORATION"

SIZE C | CODE PA | NUMBER 3700635-0-0 | REV.

PACKAGE DIMENSIONS, WEIGHTS & PLASTIC PACKING MATERIAL

	USA	METRIC
WEIGHT	650.0 LBS.	295.0 KG.
LENGTH	48.00 IN.	1219 MM
WIDTH	42.00 IN.	1067 MM
HEIGHT	35.00 IN.	889 MM
CUBE	40.8 CU. FT.	116 CU.M
DENSITY	16 LBS./CU. FT.	25.5 KG/CU.M
*PLASTIC	% VOL / % WT	TYPE

*% VOLUME (EXPANDED)
% WEIGHT (UNEXPANDED)

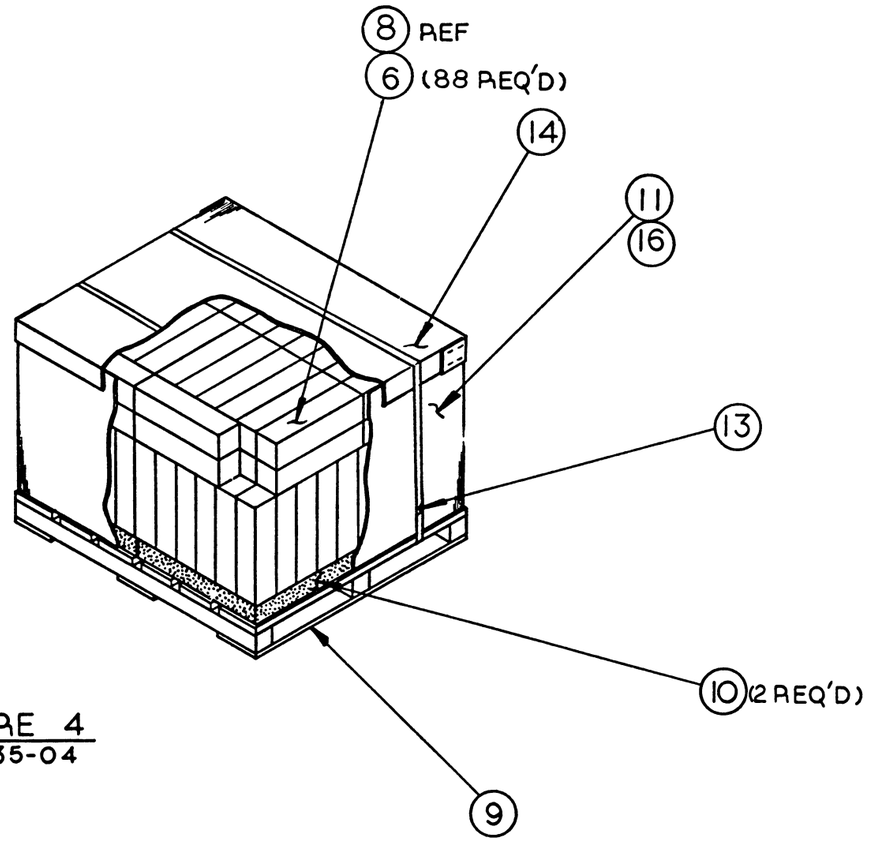

FIGURE 4
3700635-04

FOR OFF SHEET PARTS LIST SEE K-PL-3700635-0-DBP

DRN. GYORKE	DATE 5/12/82	TITLE digital
CHK'D.	DATE	PKG POWER SUPPLY H7202/H7200
DES. ENG.	DATE	
RESP ENG.	DATE	
MFG. ENG.	DATE	
NEXT HIGHER DOC.		DOCUMENT NUMBER: SIZE C | CODE PA | NUMBER 3700635-0-0 | REV A
		SCALE — | SHEET 8 OF 10

REVISION HISTORY | REV. | ECO NUMBER | DATE

SIZE C | PA | 3700635-0-0 | REV. A

DRC 1118

"THIS DRAWING AND SPECIFICATIONS, HEREIN, ARE THE PROPERTY OF DIGITAL EQUIPMENT CORPORATION AND SHALL NOT BE REPRODUCED OR COPIED OR USED IN WHOLE OR IN PART AS THE BASIS FOR THE MANUFACTURE OR SALE OF ITEMS WITHOUT WRITTEN PERMISSION.
COPYRIGHT © 1982 DIGITAL EQUIPMENT CORPORATION"

SIZE C | CODE PA | NUMBER 3700636-0-0 | REV. A

PACKAGE DIMENSIONS, WEIGHTS & PLASTIC PACKING MATERIAL

	USA	METRIC
WEIGHT	2.13 LBS.	0.97 KG.
LENGTH	14.00 IN.	356 MM
WIDTH	6.81 IN.	173 MM
HEIGHT	4.75 IN.	121 MM
CUBE	0.26 CU. FT.	0.0074 CU.M
DENSITY	8.2LBS./CU. FT.	131 KG/CU.M
*PLASTIC	% VOL	% WT	TYPE

*% VOLUME (EXPANDED)
% WEIGHT (UNEXPANDED)

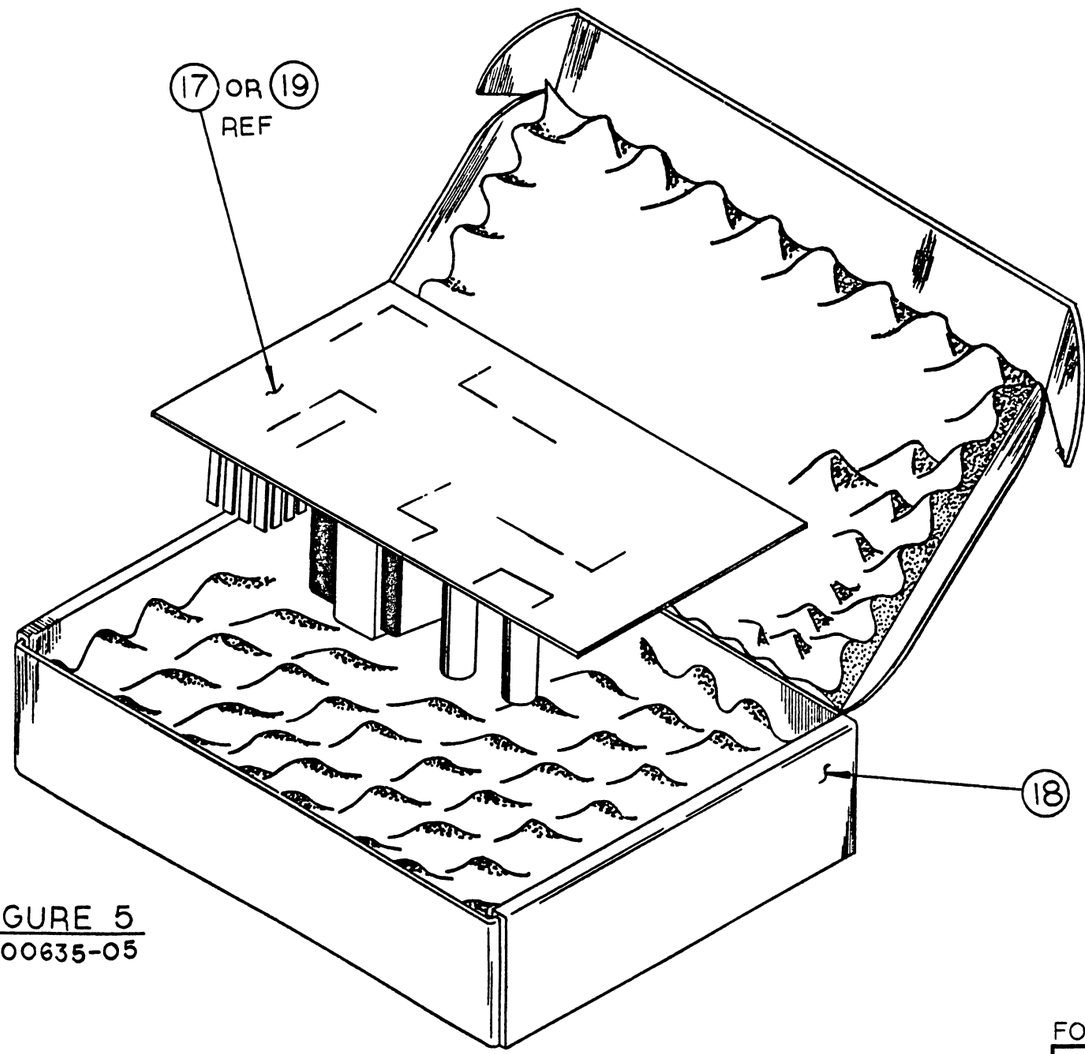

FIGURE 5
3700635-05

FOR OFF SHEET PARTS LIST SEE K-PL-3700635-0-DBP

DRN. Gyorke	DATE 5/3/82	TITLE digital
CHK'D.	DATE	PKG POWER SUPPLY H7202/H7200
DES ENG.	DATE	
RESP ENG.	DATE	
MFG. ENG.	DATE	
NEXT HIGHER DOC.		DOCUMENT NUMBER: SIZE C | CODE PA | NUMBER 3700635-0-0 | REV A
		SCALE — | SHEET 9 OF 10

REVISION HISTORY

REV.	ECO NUMBER	DATE

DRC 1118

"THIS DRAWING AND SPECIFICATIONS, HEREIN, ARE THE PROPERTY OF DIGITAL EQUIPMENT CORPORATION AND SHALL NOT BE REPRODUCED OR COPIED OR USED IN WHOLE OR IN PART AS THE BASIS FOR THE MANUFACTURE OR SALE OF ITEMS WITHOUT WRITTEN PERMISSION.
COPYRIGHT © 1982 DIGITAL EQUIPMENT CORPORATION"

SIZE C | CODE PA | NUMBER 3700635-0-0 | REV. A

PACKAGE DIMENSIONS, WEIGHTS & PLASTIC PACKING MATERIAL

	USA	METRIC
WEIGHT	407.0 LBS.	185.0 KG.
LENGTH	49.00 IN.	1245 MM
WIDTH	42.00 IN.	1067 MM
HEIGHT	44.00 IN.	1118 MM
CUBE	52.4 CU. FT.	1.48 CU.M
DENSITY	78 LBS./CU. FT.	124 KG/CU.M
*PLASTIC	% VOL	% WT	TYPE

*% VOLUME (EXPANDED)
% WEIGHT (UNEXPANDED)

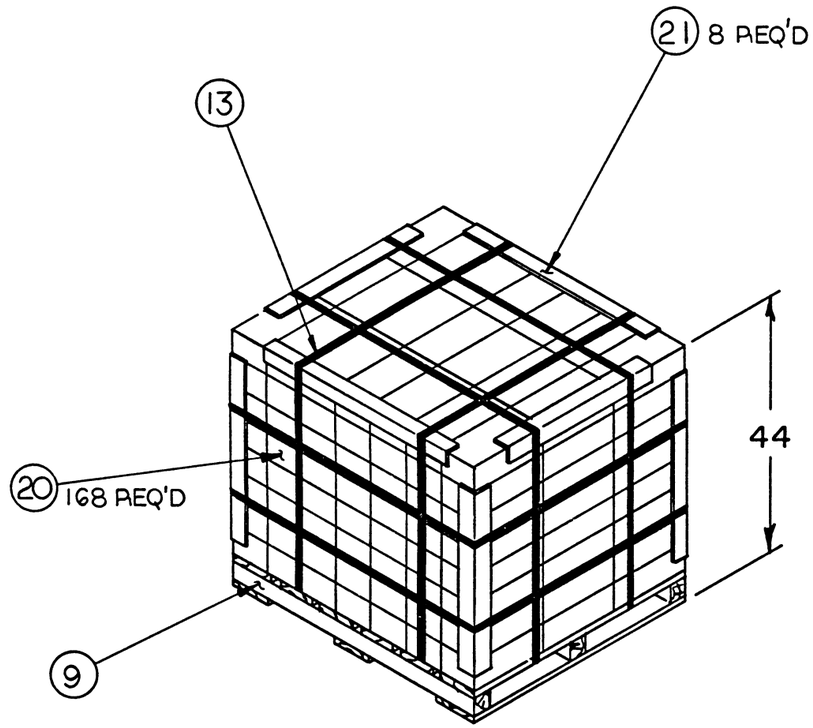

FIGURE 6
3700635-06

21 CARTONS PER TIER
8 TIERS HIGH

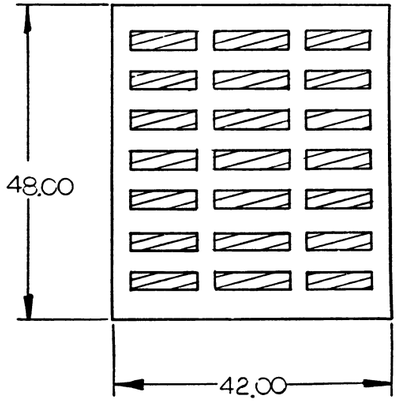

FOR OFF SHEET PARTS LIST SEE K-PL-3700635-0-DBP

DRN. GYORKE	DATE 5/4/82	TITLE digital
CHK'D	DATE	PKG POWER SUPPLY H7202/H7200
DES ENG.	DATE	
RESP ENG.	DATE	
MFG. ENG.	DATE	
NEXT HIGHER DOC		DOCUMENT NUMBER: SIZE C | CODE PA | NUMBER 3700635-0-0 | REV A
		SCALE NONE | SHEET 10 OF 10

REVISION HISTORY | REV. | ECO NUMBER | DATE

DRC 1118

SIZE C | PA | 3700635-0-0 | REV. A

"THIS DRAWING AND SPECIFICATIONS, HEREIN, ARE THE PROPERTY OF DIGITAL EQUIPMENT CORPORATION AND SHALL NOT BE REPRODUCED OR COPIED OR USED IN WHOLE OR IN PART AS THE BASIS FOR THE MANUFACTURE OR SALE OF ITEMS WITHOUT WRITTEN PERMISSION.
COPYRIGHT © 1981 DIGITAL EQUIPMENT CORPORATION"

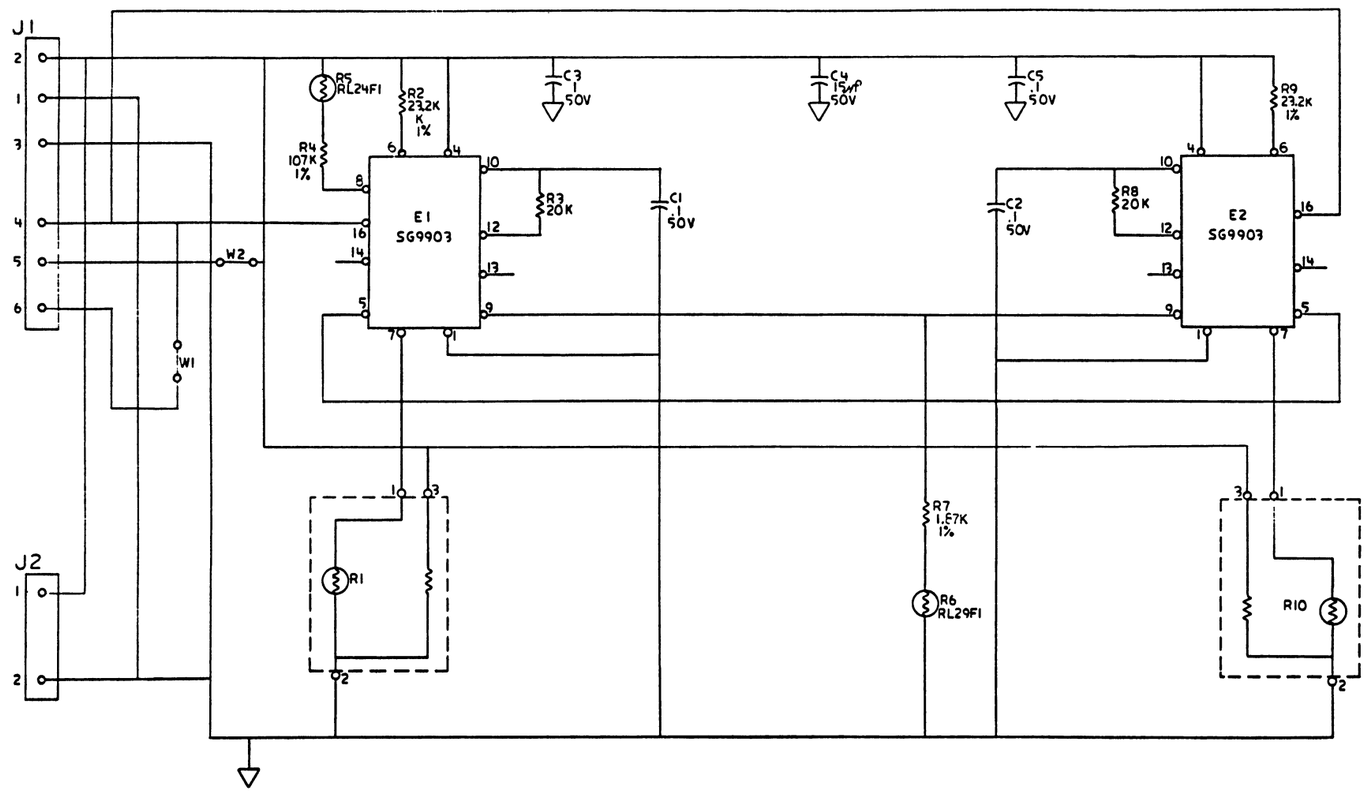

DRN. T. McHenry	DATE 3/10/81	TITLE	digital
CHK'D. [illegible]	DATE 3/11/81	AIR FLOW SENSOR	
DES. ENG. [illegible]	DATE 3-11-81		
PROJ. ENG. [illegible]	DATE 3-12-81	DOCUMENT NUMBER	
MFG. ENG. [illegible]	DATE 3/19/81	SIZE D CODE CS NUMBER 5414340-0-1 REV. A	
NEXT HIGHER DOC. D-UA-5414340-0-0		SCALE NONE SHEET OF 1	

T.W.

REVISION HISTORY: REV. | ECO NUMBER | DATE

DRD 1082

1981

NOTES:

1. APPLY KEYLOCK LABEL (ITEM 9) TO CONSOLE INSERT (ITEM 1) BEFORE INSTALLING KEYLOCK (ITEM 4). MAKE SURE KEYLOCK NUT IS APPLIED TIGHTLY. KEY SWITCH CORRECTLY TO MATE WITH KEYLOCK, DO NOT FORCE.
2. SQUEEZE MIDDLE SECTION TOGETHER FOR SNAP-FIT OF TU BEZEL (ITEM 10) ONTO MOUNTING PLATE (ITEM 6). MAKE SURE ITS RIGHT SIDE UP.
3. MARK LABEL (ITEM 12) WITH DEC PART NO. AND REV LEVEL. FOLD EXCESS LABEL OVER EDGE.

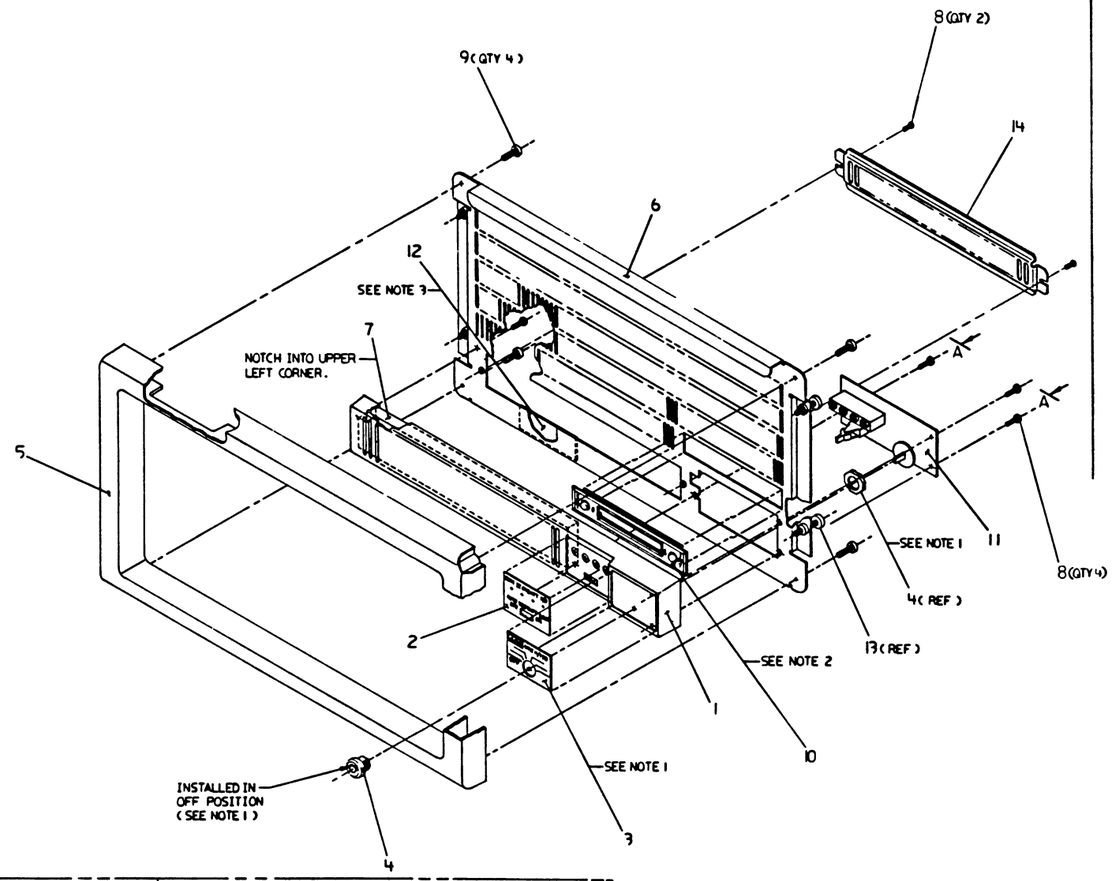

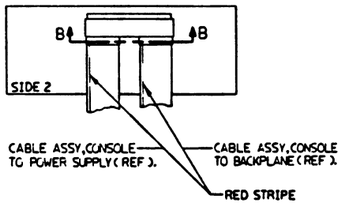

VIEW A-A
SCALE: NONE

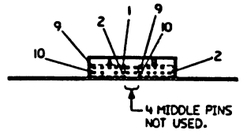

SECTION B-B
SCALE: NONE

NOTE: FOR PARTS LIST REFER TO K-PL-7018079-0-DBP.

UNLESS OTHERWISE SPECIFIED DIMENSIONS ARE IN INCHES AND THE FOLLOWING TOLERANCES APPLY (PER DEC STD 119)	
DO NOT SCALE DRAWING	
REMOVE BURRS AND BREAK SHARP CORNERS	
MATERIAL	SEE PARTS LIST
TITLE	CONSOLE ASSY
E-UA-11730-Z-0	
SIZE	E
DOCUMENT NUMBER	AD 7018079-0-0
REV	A

AD 7018079-0-0 A

AUTOMATED BY PRTLST.3P(44) P A R T S L I S T SHEET A1 OF A1

LINE	ITEM	DOCUMENT NUMBER	PART NUMBER	DESCRIPTION	QUANTITY PER VARIATION 00
1	1	E-IA-7424269-0-0	7424269-00	CONSOLE INSERT	1
2	2	A-PS-3617322-0-0	3617322-00	LABEL,LEGEND STRIP VAX 11/730 LE	1
3	3	A-PS-3617902-0-0	3617902-01	LABEL,LEGEND STRIP VAX 11/730 6P	1
4	4	A-PS-1216178-0-0	1216178-01	LOCK,PLASTIC 6POS ASSY	1
5	5	E-PS-1217094-0-0	1217094-00	BEZEL,PLASTIC 11-44	1
6	6	E-IA-7424832-0-0	7424832-00	PLATE,MTG 10-1/2	1
7	7	A-PS-1217665-0-0	1217665-01	FILTER,FOAM 11.5X1.85X1/2 5PPI	1
8	8		9009984-02	SCREW, SEMS, PHILLIPS PAN HD. 6-	6
9	9		9010119-00	SCREW, PHILLIPS TRUSS HD, 10-32	4
10	10	C-IA-7018168-0-0	7018168-00	TU58 DUAL DRIVE BEZEL ASSY	1
11	11	D-AD-5414438-0-0	5414438-01	CONSOLE MODULE	1
12	12		9009255-01	LABEL, POWER SUPPLY, 2-7/8" LG X	1
13	13		9006075-03	SCREW,TRUS,PHIL, 10-32X 3/4	REF
14	14	D-MD-7426334-0-0	7426334-01	SHIELD	1

REVISION HISTORY			BASIC PART NO: 7018079									
ENG	ECO NUMBER	REV	SECTION A OF A	DRN: P. TOUSIGNANT	DATE: 30-JUL-81		D	I	G	I	T	A	L
	INITIAL	XA	SECTION. VARIATION INDEX			TITLE	PARTS LIST						
	INITIAL	A	[A] 00	CHK'D: A. ROCHA	DATE: 30-JUL-81	CONSOLE ASSEMBLY							
			[B]	DES.ENG.: R. MORIN	DATE: 30-JUL-81								
			[C]			DOCUMENT NUMBER							
			[D]	RESP.ENG.: R. MORIN	DATE: 30-JUL-81	SIZE	CODE	NUMBER				REV	
			[E]	MFG.ENG.: S. CASTIGLIONE	DATE: 30-JUL-81	K	PL	7018079-0-0				A	
			[F]	ASSEMBLY NUMBER: E-AD-7018079-0-0	TOP DOCUMENT NUMBER: E-UA-11730-Z-0			FILE NAME: Z1827A.PLS				EDIT # 16	

"THIS DRAWING AND SPECIFICATIONS HEREIN, ARE THE PROPERTY OF DIGITAL EQUIPMENT CORPORATION AND SHALL NOT BE REPRODUCED OR COPIED OR USED IN WHOLE OR IN PART AS THE BASIS FOR THE MANUFACTURE OR SALE OF ITEMS WITHOUT WRITTEN PERMISSION.
COPYRIGHT (C) 1981. DIGITAL EQUIPMENT CORPORATION "

SIZE	CODE	NUMBER	REV.
B	DD	5414438-0	B

DRAWING NO.	NO. OF SHTS.	PART NO.	DESCRIPTION	REVISIONS	
			MODULE REVISION	A	B
B-DD-5414438-0	1		CONSOLE MODULE	A	B
D-UA-5414438-0-0	3		CONSOLE MODULE	A	B
K-PL-5414438-0-DBP	1		CONSOLE MODULE	A	B
D-CS-5414438-0-1	1		CONSOLE MODULE	A	A
D-MD-5014437-0-0	3		DRILL & ETCH DRAWING	A	A
		5014437	ETCHED BOARD	A	A
K-PC-5414438-0-DBG			P.C. DESIGN DATA BASE	A	A
D-EC-5014437-0-0	2		ETCH CUT DRAWING	A	A

NOTES:

REVISIONS		
REV.		B
CHG NO.		TW001
DATE		3-82

"THIS DRAWING AND SPECIFICATIONS, HEREIN, ARE THE PROPERTY OF DIGITAL EQUIPMENT CORPORATION AND SHALL NOT BE REPRODUCED OR COPIED OR USED IN WHOLE OR IN PART AS THE BASIS FOR THE MANUFACTURE OR SALE OF ITEMS WITHOUT WRITTEN PERMISSION.

COPYRIGHT© 1980 DIGITAL EQUIPMENT CORPORATION

digital

USED ON OPTION/MODEL

DRN.	P. Grosse	29 JUL 80
CHK'D	[illegible]	7-30-80
ENG.	[illegible]	[illegible]-3-80
PROD.	[illegible]	[illegible]

TITLE CONSOLE MODULE

SIZE	CODE	NUMBER	REV.
B	DD	5414438-0	B

SHEET 1 OF 1

DRB 126

TW

COMPONENT SIDE VIEW

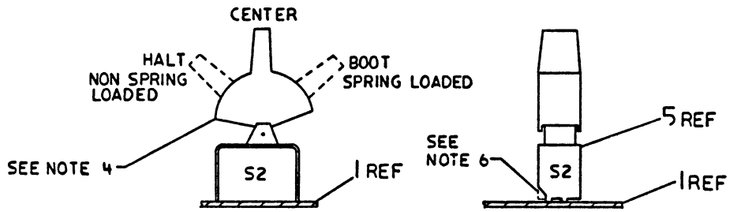

VIEW A-A
SCALE: NONE

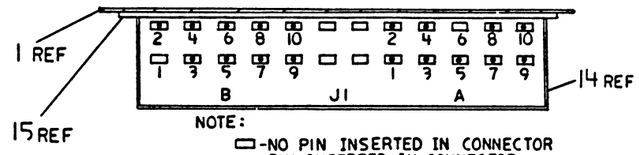

NOTE:
▭ -NO PIN INSERTED IN CONNECTOR
⊡ -PIN INSERTED IN CONNECTOR
USED WITH 11/730-ZA(5414438-01) ONLY

VIEW C-C
SCALE: NONE

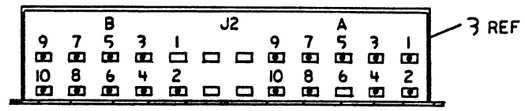

NOTE:
▭ -NO PIN INSERTED IN CONNECTOR
⊡ -PIN INSERTED IN CONNECTOR
USED WITH 11/730-AA(5414438-00) ONLY

VIEW B-B
SCALE: NONE

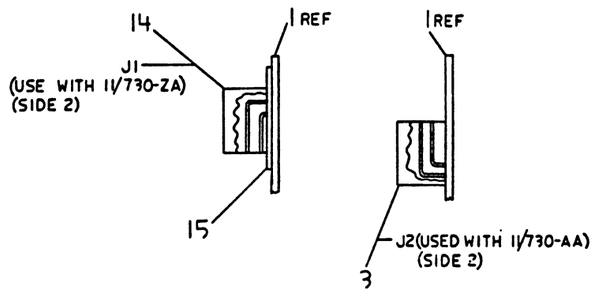

VIEW D-D

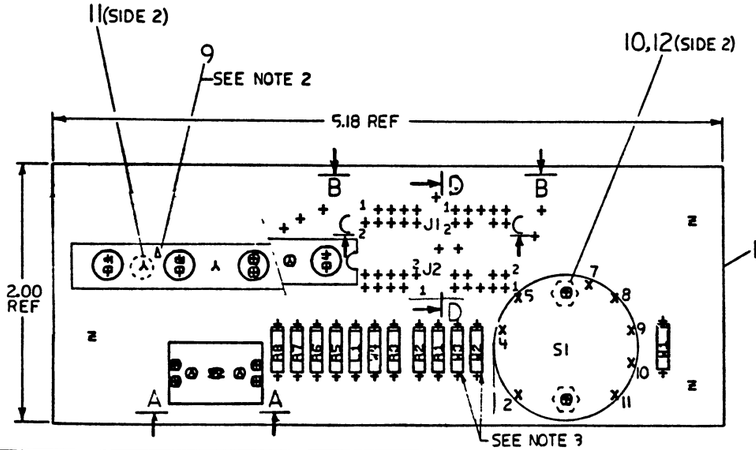

NOTES:
1. STEP & REPEAT 2ML33.
2. COMPONENT ORIENTATION MARK.
3. JUMPER W2 IS USED ON VARIATION -01. W3 IS USED ON-00
4. MOUNT S2 WITH SPRING LOAD POSITION TOWARD S1.

STEP & REPEAT	↑ Y AXIS 2.125	STEP 3 TIMES
	→ X AXIS 5.250	STEP 1 TIMES

CHK	CHANGE NO	REV
	5414438-1	B

R. DAY

NOTES (CONT)
5. W1 IS NOT INSTALLED
6. REMOVE A SMALL SECTION OF THE MOUNTING BRACKET OF S2 BEFORE MOUNTING TO PC BOARD.

ETCH REV. A

SIGNATURES	DATE
DRN.	9 JUL 70
CHK'D.	9-30-70
MECH. ENG.	10-8-70
PROJ. ENG.	10-8-70
PROD.	10-8-70
SCALE 2:1	
SHT. 1 OF 1	
NEXT HIGHER ASSY. B-DD-5414438-0	

digital

TITLE
CONSOLE BOARD

SIZE	CODE	NUMBER	REV
D	UA	5414438-0-0	B

TW 1. MS#170299

5414438-0-0 DUA B

AUTOMATED BY PRTLST,3P(44)

P A R T S L I S T

LINE	ITEM	DOCUMENT NUMBER	PART NUMBER	DESCRIPTION	QTY PER VARIATION 00	01	REFEPENCE DESIGNATOR
1	1	D-MD-5014437-0-0	5014437-00	CONSOLE MODULE	1	1	
2	2		1110864-00	LED 2MCD@10MA	4	4	D1-D4
3	3		1213506-06	HEADER 24POS RT ANGLE	1	-	J2
4	4		1218038-00	SW,ROT 1P 2.0A 6POS 1SECTION	1	1	S1
5	5		1216179-00	SW,LEVER 1P ON/OFF/ON	1	1	S2
6	6		1300229-00	100.0 .25 W 5.0 % CC	3	3	R1,R2,R8
7	7		1300316-00	470.0 .25 W 5.0 % CC	4	4	R3,R5-R7
8	8		1601562-00	1.0 UH 10% 475MA #DD1.00	1	1	L1
9	9		7413127-00	LED HOLDER REWORK	1	1	
10	10		9006555-00	NUT,HEX , 2-56X3/16AF X 1/	2	2	
11	11		9009236-01	SCREW,TAPPING,TYPE F,PAN ,PHIL,	3	3	
12	12		9009321-00	LOCK TITE, SCREW LOCK, 10CC PER	A/R	A/R	
13	13		9009185-00	JUMPER, WIRE, INSULATED, BLACK B	2	-	W3,W4
			CONT		-	2	W2,W4
14	14		1213506-08	HEADER 24POS RT ANGLE	-	1	J1

REVISION HISTORY			BASIC PART NO: 5414438
ENG	ECO NUMBER	REV	SECTION A OF A
---	INITIAL	A	SECTION,VARIATION INDEX
			[A] 00,01
			[B]
			[C]
			[D]
			[E]
			[F]
			[H]
			[J]
			[K]
			[L]
			[M]
			[N]

DRN: P.GROSSE	DATE: 09-JUL-80	D I G I T A L
CHK'D: F.GAROFALO	DATE: 09-JUL-80	TITLE PARTS LIST
		11/730 CONSOLE MODULE
DES.ENG: D.LANDRY	DATE: 09-JUL-80	
RESP.ENG.: D.LANDRY	DATE: 18-SEP-80	DOCUMENT NUMBER
MFG.ENG.: J.CONSIDINE	DATE: 8-OCT-80	SIZE: K / CODE: PL / NUMBER: 5414438-0-DBP / REV: A
ASSEMBLY NUMBER: D-UA-5414438-0-0	TOP DOCUMENT NUMBER:	FILE NAME: Z1273A.PLS / EDIT #: 32

"THIS DRAWING AND SPECIFICATIONS HEREIN, ARE THE PROPERTY OF DIGITAL EQUIPMENT CORPORATION AND SHALL NOT BE REPRODUCED OR COPIED OR USED IN WHOLE OR IN PART AS THE BASIS FOR THE MANUFACTURE OR SALE OF ITEMS WITHOUT WRITTEN PERMISSION, COPYRIGHT (C) 1981, DIGITAL EQUIPMENT CORPORATION "

TW

"THIS DRAWING AND SPECIFICATIONS, HEREIN, ARE THE PROPERTY OF DIGITAL EQUIPMENT CORPORATION AND SHALL NOT BE REPRODUCED OR COPIED OR USED IN WHOLE OR IN PART AS THE BASIS FOR THE MANUFACTURE OR SALE OF ITEMS WITHOUT WRITTEN PERMISSION.
COPYRIGHT © 1980 DIGITAL EQUIPMENT CORPORATION"

LEGEND

J1	J2	W1	W2	W3	W4	VARIATION	ASSEMBLY NUMBER
OUT	IN	OUT	OUT	IN	IN	11/730-AA	54-14438-Ø0 SEE NOTE 1
IN	OUT	OUT	IN	OUT	IN	11/730-ZA	54-14438-Ø1 SEE NOTE 1

NOTE:
1. FOR PICTORAL PINNING OF J1 AND J2 SEE D-UA-5414438-0-0.

TABLE A

POSITION	SWITCH 1A DESCRIPTION	SWITCH 1B DESCRIPTION
1	OFF	OFF
2	NONE	STANDBY
3	LOCAL	DC ON
4	LOCAL DISABLE	DC ON
5	REMOTE DISABLE	DC ON
6	REMOTE	DC ON

TABLE B

DISABLE	REMOTE	SWITCH 1A POSITION
Ø	Ø	1
Ø	Ø	2
Ø	Ø	3
1	Ø	4
1	1	5
Ø	1	6

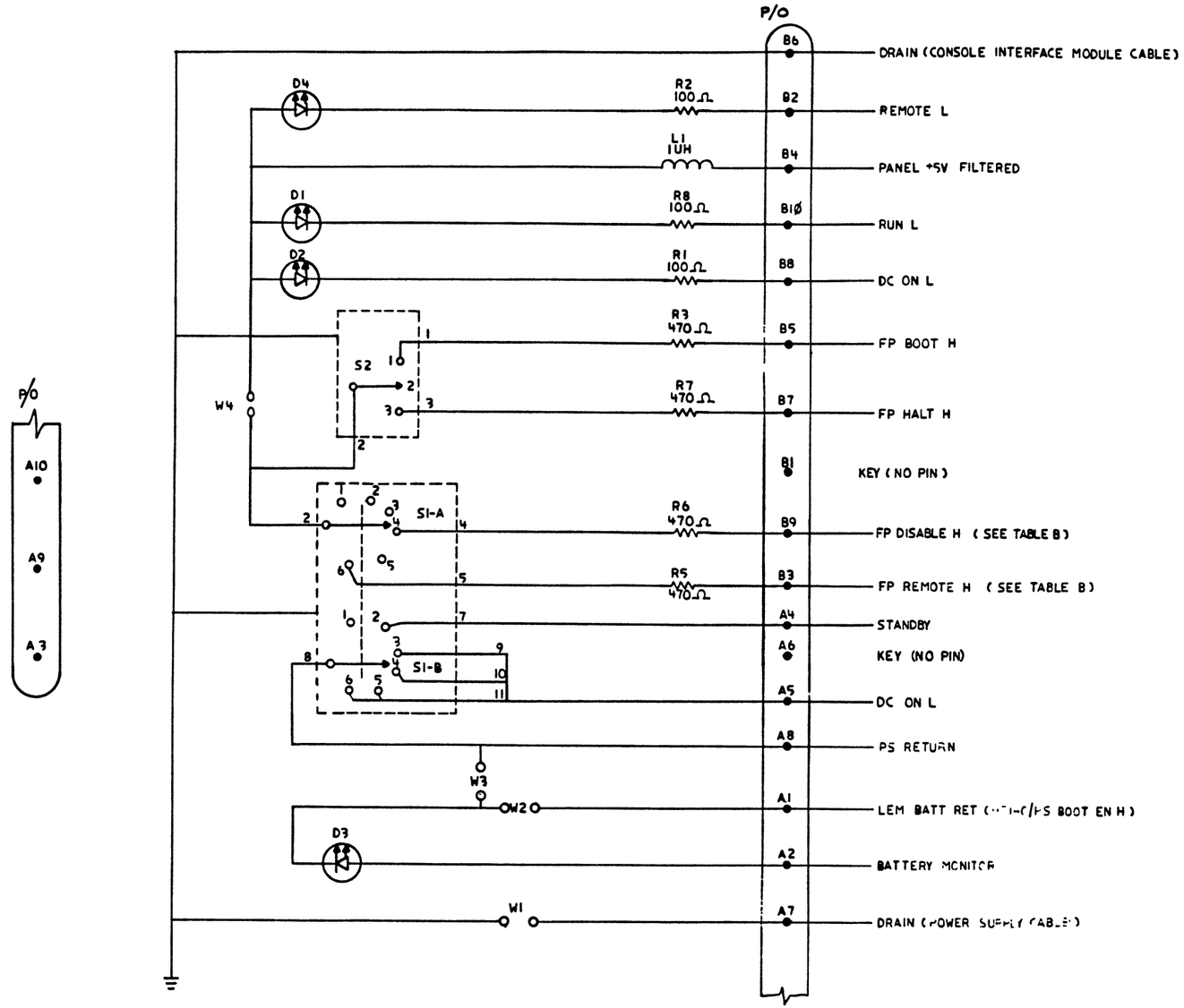

DRN. Freeman	DATE 6-18-80	TITLE digital
CHKD. [signature]	DATE 6-29-80	CONSOLE MODULE
DES. ENG. D.N. Hundey	DATE 10-8-80	
PROJ. ENG. D.M. Hundey	DATE 10-8-80	DOCUMENT NUMBER
MFG. ENG. [signature]	DATE 10-8-80	SIZE D CODE CS NUMBER 5414438-0-1 REV. A
NEXT HIGHER DOC. D-UA-5414438-0-0		SCALE ++ SHEET 1 OF 1

REVISION HISTORY: DATE | ECO NUMBER | REV.

TW

THIS DRAWING AND SPECIFICATIONS, HEREIN, ARE THE PROPERTY OF DIGITAL EQUIPMENT CORPORATION AND SHALL NOT BE REPRODUCED OR COPIED OR USED IN WHOLE OR IN PART AS THE BASIS FOR THE MANUFACTURE OR SALE OF ITEMS WITHOUT WRITTEN PERMISSION.
COPYRIGHT 1980

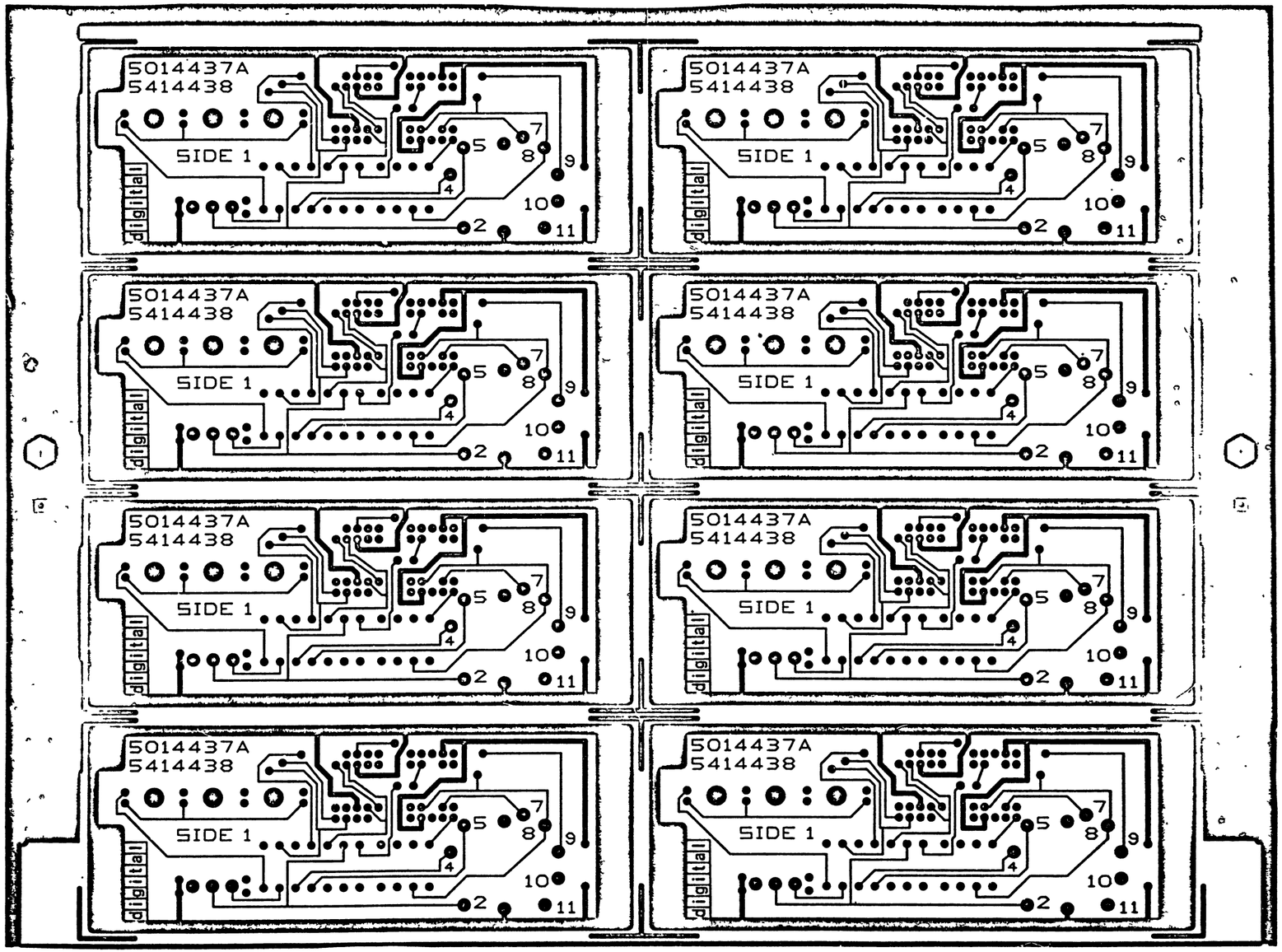

REVISION HISTORY

REV	ECO NUMBER	DATE
A	DEC 5014437-0-0	10-9-80

DRWN	Cassy	DATE 8-27-80
CHK'D	Cassy	DATE 8-27-80
ENG APPD	M. Landry	DATE 10-8-80
PROJ APPD	M Landry	DATE 10-8-80
MFG ENG		DATE 10-9-80
NEXT HIGHER ASSY		

TITLE: digital

ETCH CUT DRAWING

DOCUMENT NUMBER

SIZE	CODE	DOCUMENT NUMBER	REV
D	EC	5014437-0-0	A

SCALE 2:1 SHEET 1 OF 2

DEC 5014437-0-0 REV A

USED ON

THIS DRAWING AND SPECIFICATIONS, HEREIN, ARE THE PROPERTY OF DIGITAL EQUIPMENT CORPORATION AND SHALL NOT BE REPRODUCED OR COPIED OR USED IN WHOLE OR IN PART AS THE BASIS OF THE MANUFACTURE OR SALE OF ITEMS WITHOUT WRITTEN PERMISSION.
COPYRIGHT 1980 DIGITAL EQUIPMENT CORPORATION

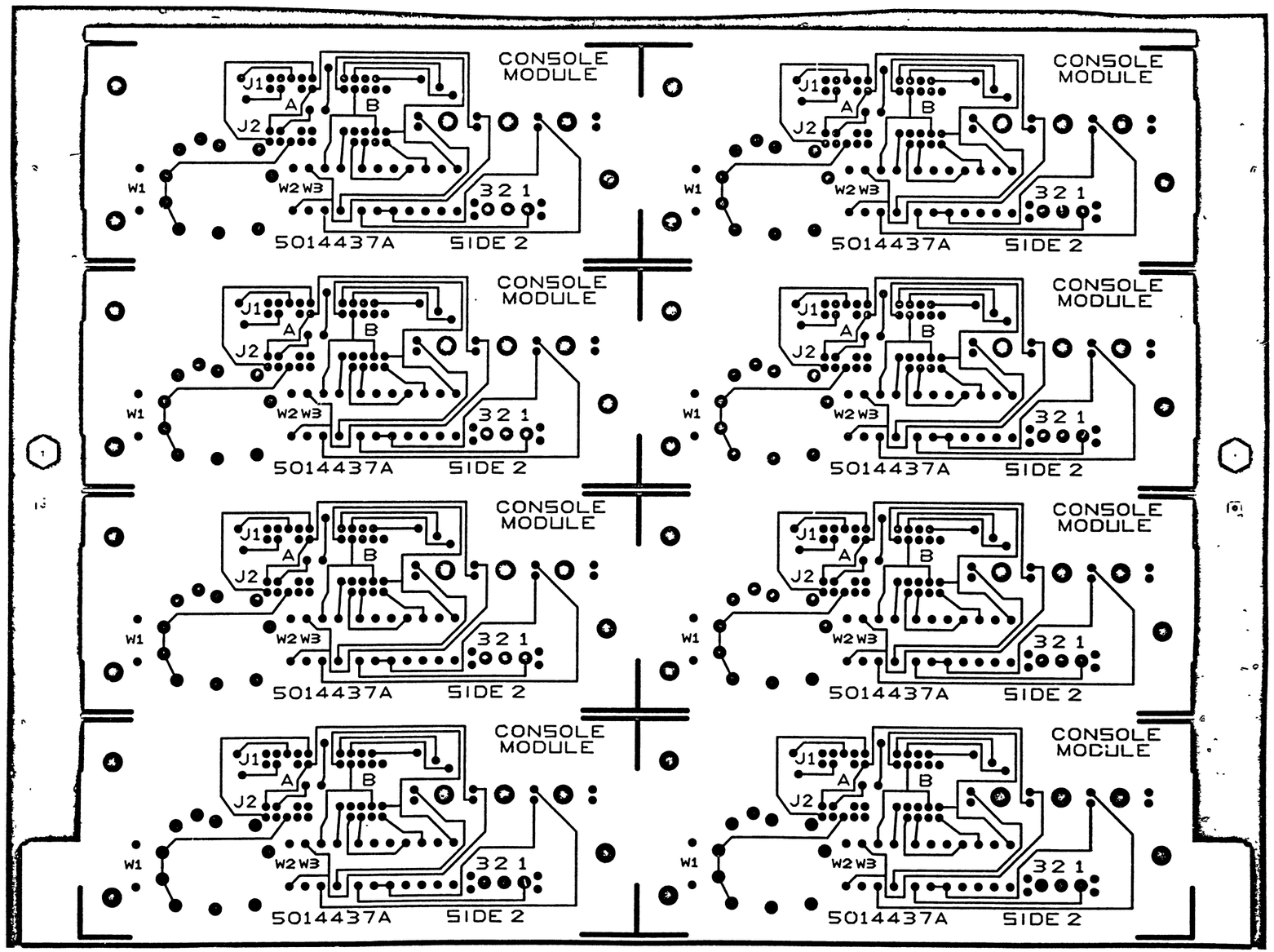

REVISION HISTORY		
DATE	ECO NUMBER	REV

TITLE: ETCH CUT DRAWING

DOCUMENT NUMBER			
SIZE	CODE	NUMBER	REV
D	EC	5014437-0-0	A
SCALE 2:1		SHEET 2 OF 2	

DRD 137A

NEXT ASSY DEC 5014437-0-0 REV A

THIS DRAWING AND SPECIFICATIONS, HEREIN, ARE THE PROPERTY OF DIGITAL EQUIPMENT CORPORATION AND SHALL NOT BE REPRODUCED OR COPIED OR USED IN WHOLE OR IN PART AS THE BASIS FOR THE MANUFACTURE OR SALE OF ITEMS WITHOUT WRITTEN PERMISSION.
COPYRIGHT © 1981 DIGITAL EQUIPMENT CORPORATION

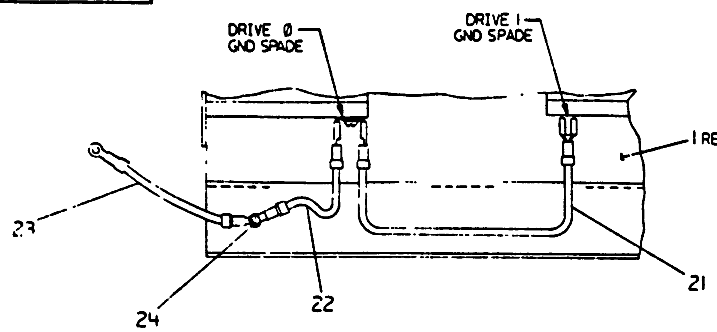

SECTION A-A
SCALE: NONE

ITEM NO.	DESCRIPTION	FROM CONN	FROM ITEM	TO CONN	TO ITEM	REMARKS
	WIRE TABLE					
10	BRN LEAD	D1		PT1-6-BRN	4	DRIVE Ø
	BLK LEAD	D1		C1 P2	4	DRIVE Ø
10	BRN LEAD	D2		PT2-6-BRN	4	DRIVE 1
	BLK LEAD	D2		C2 P2	4	DRIVE 1
21	JUMPER DR/DR	DRIVE 0 SPADE GND		DRIVE 1 SPADE GND		
22	JUMPER DR/GND	DRIVE 0 SPADE GND		UNIT GND STUD		ITEM 24, QTY 1,
23	JUMPER GND/GND	(FLOATING)		UNIT GND STUD		TO CONN BOTH

NOTES:
1 BROWN WIRE (PT1-6, DRIVE Ø) & (PT2-6, DRIVE 1) MUST BE DISCONNECTED FROM C1-P2 & C2-P2 RESPECTIVELY BEFORE WIRING ITEM
2 DRIVE ASSEMBLY SEQUENCE:
   A. INSTALL ITEM 2 (DRIVE 1) WITH ITEMS 13 & 5.
   B. INSTALL ITEM 3 WITH ITEM 5.
   C. INSTALL ITEM 2 (DRIVE Ø) WITH ITEMS 13 & 5.
   D. INSTALL DRIVE UNITS (ITEMS 4) USING ITEM 6 AND TORQUE PER NOTE 3.
   E. DRIVE Ø MUST BE ALIGNED IN THE CENTER OF ITS SLOT.
3 TORQUE VALUES ON DRIVES TO BE 6.0±1.0/LBS ON ITEM 6.

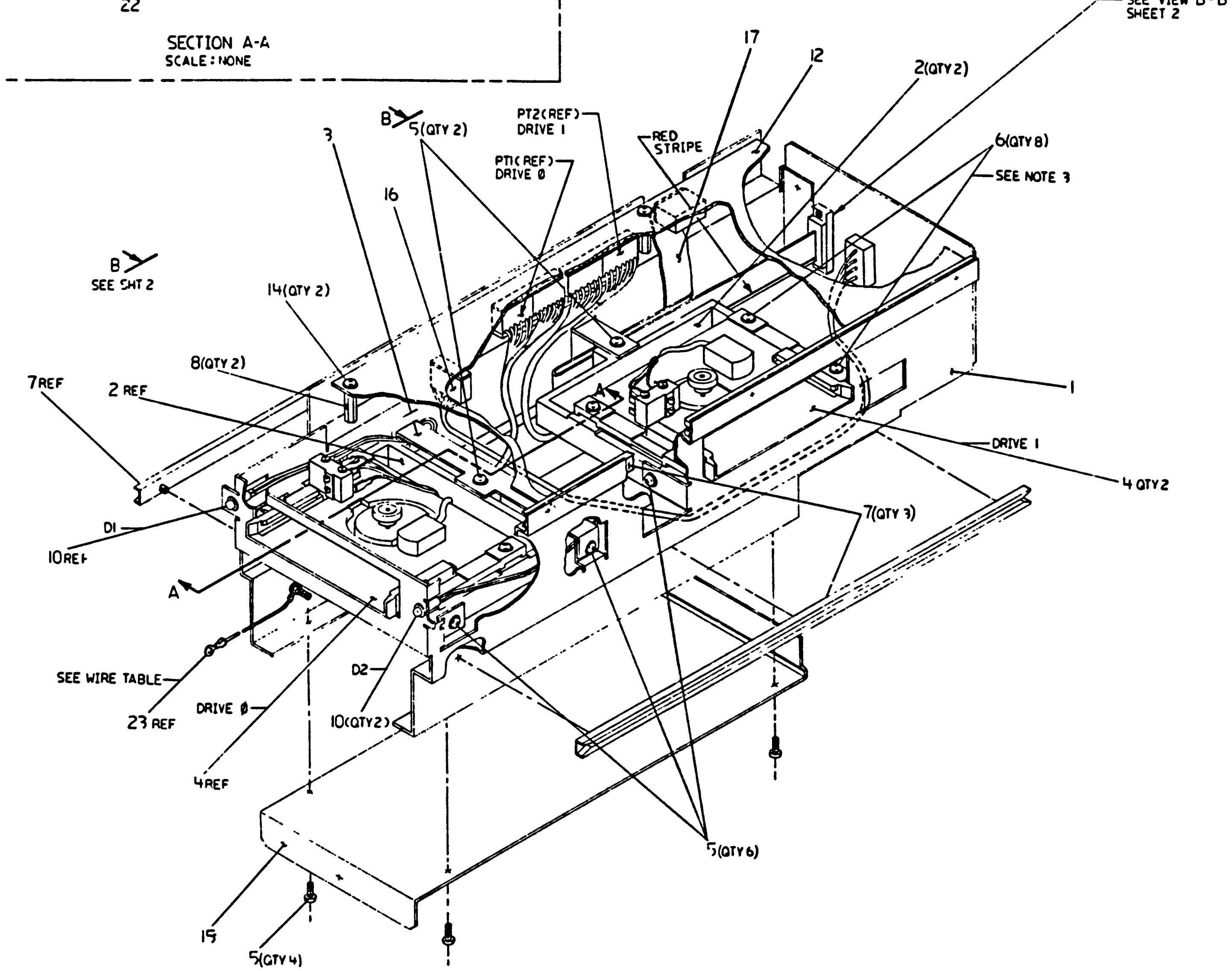

NOTE: FOR PARTS LIST REFER TO K-PL-7018114-0-DBP.

UNLESS OTHERWISE SPECIFIED DIMENSIONS ARE IN INCHES AND THE FOLLOWING TOLERANCES APPLY (PER DEC STD 114)
THIRD ANGLE PROJECTION
DO NOT SCALE DRAWING
REMOVE BURRS AND BREAK SHARP CORNERS
MATERIAL: SEE PARTS LIST
NEXT HIGHER ASSY: E-UA-11730-Z-0
digital
TITLE: TU58 DUAL DRIVE ASSY
SIZE E CODE AD NUMBER 7018114-0-0 REV A
SHEET 1 OF 2

TW 1

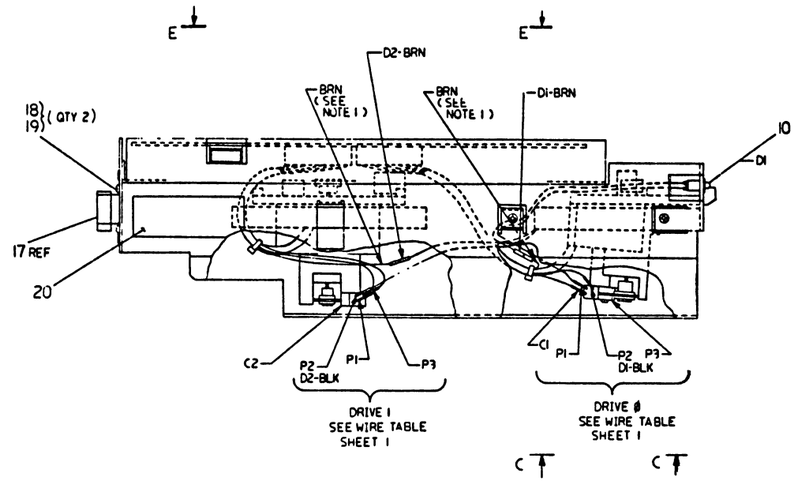

VIEW B-B
SCALE: NONE

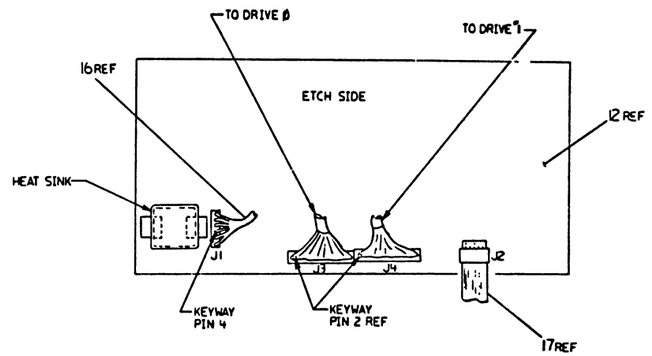

VIEW E-E
SCALE: NONE
(ROTATED 180°)

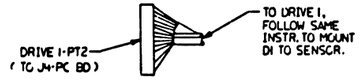

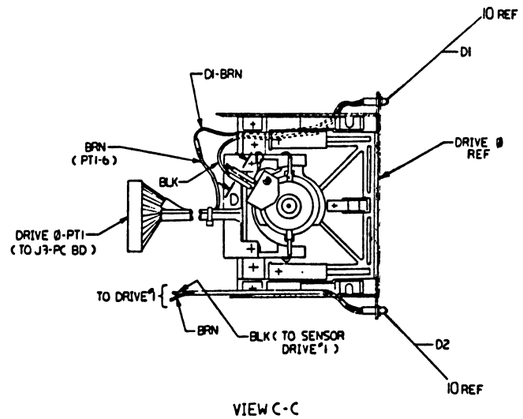

VIEW C-C

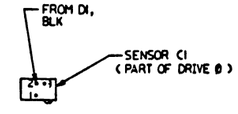

VIEW D-D
SCALE: NONE
(WIRES REMOVED)

REVISION HISTORY		
DATE	ECO NUMBER	REV

TITLE: TU58 DUAL DRIVE ASSY

DOCUMENT NUMBER: AD-7018114-0-0 REV 1

SIZE E | SCALE | SHEET 2 OF 2

TW

AUTOMATED BY PRTLST.3P(44) P A R T S L I S T SHEET A1 OF A1

LINE	ITEM	DOCUMENT NUMBER	PART NUMBER	DESCRIPTION	QUANTITY PER VARIATION 00
1	1	C-IA-7018164-0-0	7018164-00	TU ENCLOSURE RIVETED ASSY	1
2	2	D-IA-7423933-0-0	7423933-00	TU58 PLATFORM	2
3	3	B-MD-7424846-0-0	7424846-00	BRACE,CENTER,TU	1
4	4	D-AD-7015510-0-0	7015510-00	CARTRIDGE DRIVE	2
5	5		9009701-00	SCREW,PAN,PHIL,SEMS 6-32X .312L	12
6	6		9009984-02	SCREW, SEMS, PHILLIPS PAN HD. 6-	8
7	7		9010107-00	GUIDE, CARD 11"LG.	3
8	8		9009284-00	STANDOFF,HEX,M/F 4-40	2
9	9	BLANK		*** THIS ITEM IS NOT USED ***	-
10	10	A-PS-1118799-0-0	1118799-00	LED 15.0MCD@20MA 3.0V	2
11	11	BLANK		*** THIS ITEM IS NOT USED ***	-
12	12	E-UA-5413489-0-0	5413489-00	TU58 ELECTRONICS SERIAL	1
13	13	BLANK		*** THIS ITEM IS NOT USED ***	-
14	14		9009643-02	SCREW,PAN,SLOT,SEMS 4-40X .250L	2
15	15	D-MD-7424848-0-0	7424848-00	PLATE,BOTTOM,TU	1
16	16	D-IA-7018166-0-0	7018166-1B	TU BULKHEAD PWR CABLE	1
17	17	C-IA-7016305-0-0	7016305-0K	CABLE, SERIAL TU58	1
18	18		9006013-01	SCREW,PAN,PHIL 4-40K 1/2 SS	2
19	19		9009990-00	NUT,KEP 4-40 X1/4 AF	2
20	20		9009255-01	LABEL, POWER SUPPLY, 2-7/8" LG X	1
21	21	B-IA-7018521-0-0	7018521-00	JUMPER, DRIVE/DRIVE	1
22	22	B-IA-7018522-0-0	7018522-00	JUMPER DRIVE/GND	1
23	23	B-IA-7018523-0-0	7018523-00	JUMPER, GND/GND	1
24	24		9008185-00	NUT,KEP 6-32X 1/4 AF	1

REVISION HISTORY

ENG	ECO NUMBER	REV
---	INITIAL	A

BASIC PART NO: 7018114
SECTION A OF A
SECTION. VARIATION INDEX
[A] 00
[B]
[C]
[D]
[E]
[F]

DRN: A. ROCHA DATE: 23-JUL-81
CHK'D: R. MORIN DATE: 23-JUL-81
DES.ENG.: R. MORIN DATE: 23-JUL-81
RESP.ENG.: R. MORIN DATE: 23-JUL-81
MFG.ENG.: S. CASTIGLIONE DATE: 23-JUL-81
ASSEMBLY NUMBER: E-AD-7018114-0-0
TOP DOCUMENT NUMBER: E-UA-11730-Z-0

D I G I T A L

TITLE PARTS LIST
TU58 DUAL DRIVE ASSY

DOCUMENT NUMBER

SIZE	CODE	NUMBER	REV
K	PL	7018114-0-DBP	A

FILE NAME: Z1352A.PLS
EDIT # 20

"THIS DRAWING AND SPECIFICATIONS HEREIN, ARE THE PROPERTY OF DIGITAL EQUIPMENT CORPORATION AND SHALL NOT BE REPRODUCED OR COPIED OR USED IN WHOLE OR IN PART AS THE BASIS FOR THE MANUFACTURE OR SALE OF ITEMS WITHOUT WRITTEN PERMISSION.
COPYRIGHT (C) 1981. DIGITAL EQUIPMENT CORPORATION "

"THIS DRAWING AND SPECIFICATIONS, HEREIN, ARE THE PROPERTY OF DIGITAL EQUIPMENT CORPORATION AND SHALL NOT BE REPRODUCED OR COPIED OR USED IN WHOLE OR IN PART AS THE BASIS FOR THE MANUFACTURE OR SALE OF ITEMS WITHOUT WRITTEN PERMISSION.
COPYRIGHT © 1978, DIGITAL EQUIPMENT CORPORATION"

WIRE TABLE

ITEM NO	DESCRIPTION AWG	DESCRIPTION COLOR	FROM CONN	FROM WITH	TO CONN	TO WITH	REMARKS
10	24	YEL	PT-2	—	SWI-5	—	
10	24	GRY	PT-1	—	SWI-2	—	
10	24	VIO	PT-3	—	SWI-3	—	
31	22	—	SW-6	SOLD	SWI-3	SOLD.	BUS WIRE
10	24	GRN	PT-6	—	CI-3	—	
10	24	BRN	PT-8	—	CI-2	—	
10	24	BLU	PT-7	—	CI-1	—	
10	24	BLK	PT-5	—	MOTOR-	—	TWISTED PAIR
10	24	RED	PT-4	—	MOTOR+	—	

NOTES:

1. MOTOR TO BE ROTATED TO PROVIDE EASIEST ACCESS TO TERMINALS PT4, PT5, MOTOR LEADS MAY BE BENT AS SHOWN IF NECESSARY TO CLEAR MOTOR MOUNT.
2. CODE WHEEL ITEM #7 MUST ROTATE FREELY WITHOUT RUBBING IN SLOT IN OPTICAL SENSOR ITEM #9. TIGHTEN ITEM #20 TO 3.5±.5 IN LBS
3. SET DRIVE ROLLER, ITEM #8, TO BE FLUSH WITH END OF MOTOR SHAFT ITEM #11. TIGHTEN ITEM #20 TO 3.5±.5 IN LBS
4. TIGHTEN ITEMS 13 & 25 TO 2.0±.5 IN LBS
5. TIGHTEN ITEMS 15, 19 & 27 TO 3.5±.5 IN LBS
6. TIGHTEN ITEM 21 TO 5±.5 IN LBS.
7. WHEN CARTRIDGE IS INSERTED INTO DRIVE, THE FORCE ON THE DRIVE ROLLER (ITEM 8) IS TO BE 1 LB ±.1".
8. ASSEMBLE ITEM# 5, 6 & 9 USING 5± .5 IN LBS TORQUE.
9. CARTRIDGE WITHDRAWAL FORCE SHALL BE A MAXIMUM OF 4.8 LBS. AND WHEN AN EXCESS FORCE OF 1 LB. IS APPLIED TO THE DRIVE ROLLER (OUTWARD) AND IS REMOVED, THE CARTRIDGE SHALL STILL BE AGAINST THE DRIVE REFERENCE STOPS
10. HEAD SKEW TO BE WITHIN 6' ± 0°6' AFTER FINAL ASSY.

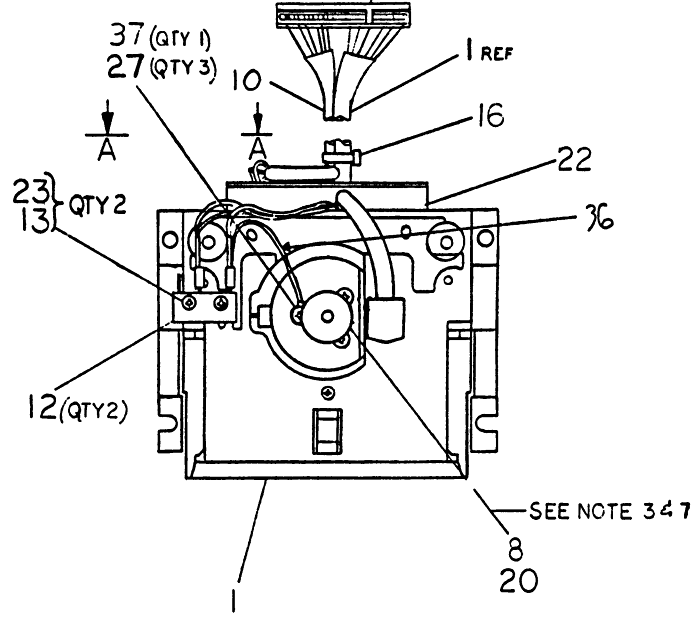

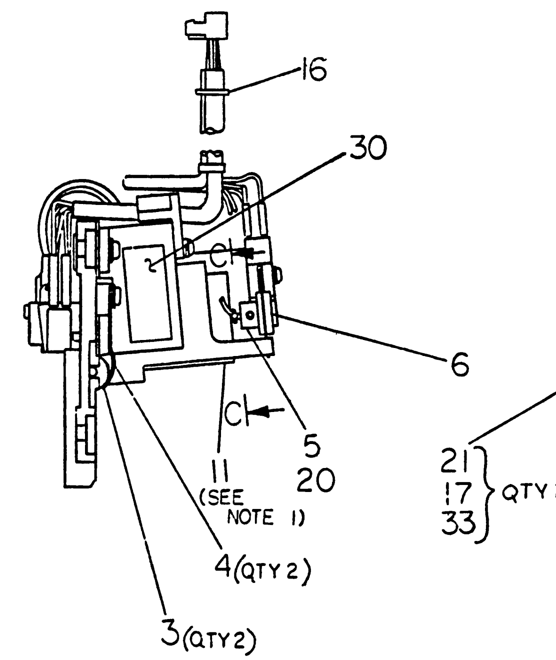

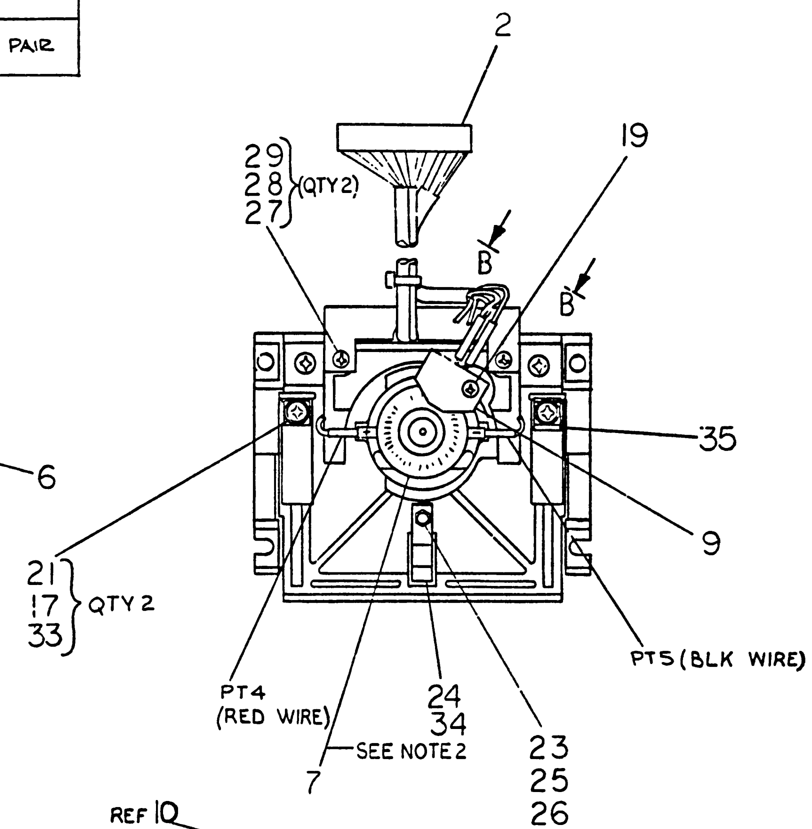

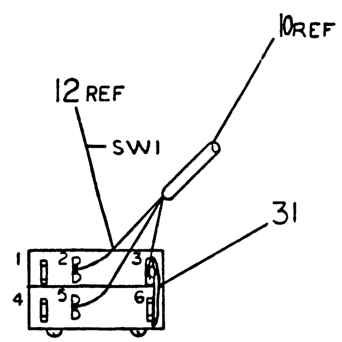

VIEW A-A
SCALE: NONE

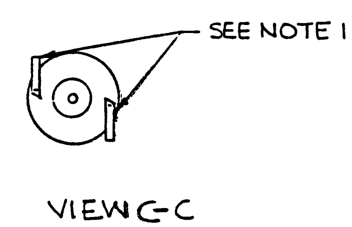

VIEW C-C
SCALE: NONE

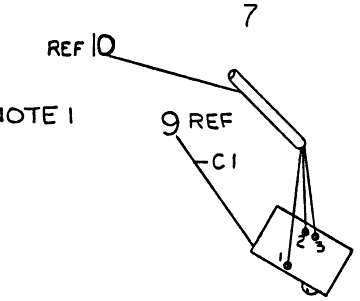

VIEW B-B
SCALE: NONE

CAUTION: OFF SHEET PARTS LIST K-PL-7015510-0-DBP

REVISIONS

CHK	CHANGE NO.	REV.
	7015510-ML001 (D. WARREN, 1 NOV 79)	A
	TU58-XA-ML002 (D. WARREN, 9 JAN 80)	B
	TU58-XA-ML003 (D. WARREN, 8/5/80)	C
	7015510-ML002 (D. WARREN, 7/24/80)	D
	TU58XA-ML004 (D. WARREN, 9/24/80)	E
	7015510-ML003 (1/21/82, 3-2-82)	F

DESCRIPTION	DWG./PART NO.	ITEM NO.

UNLESS OTHERWISE SPECIFIED DIMENSIONS ARE IN INCHES

ANGLES ±0° 30'	CLASS OF ACCURACY (CHECK ONE)	OVER 0 TO 0.2	OVER 0.2 TO 1.2	OVER 1.2 TO 4.0	OVER 4.0 TO 12.0	OVER 12.0 TO 40.0	OVER 40.0 TO 80.0
SURFACE QUALITY IN MICROINCHES	MEDIUM	±.004	±.008	±.012	±.016	±.024	±.04
	PREFERRED	±.012	±.016	±.025	±.04	±.063	±0.1

QUANTITY & VARIATION

THIRD ANGLE PROJECTION

REMOVE BURRS AND BREAK SHARP CORNERS

DO NOT SCALE DWG

MATERIAL: SEE PARTS LIST

FINISH: —

DRN. / CHK'D 5 DEC 78 / ENG. 5 DEC 78 / PROJ. ENG. / PROD.

NEXT HIGHER ASSY. K-PL-TU58-XA-DBP

SCALE 1/1 — SHEET 1 OF 1

FIRST USED ON TU58-XA — digital

TITLE: CARTRIDGE DRIVE

SIZE D — CODE AD — NUMBER 7015510-0-0 — REV. F

DIST.

ML2

AUTOMATED BY FRTLST.3P(44) — P A R T S L I S T — SHEET A1 OF A2

LINE	ITEM	DOCUMENT NUMBER	PART NUMBER	DESCRIPTION	QUANTITY PER VARIATION 00
1	1	D-IA-7016558-0-0	7016558-00	HEAD MOUNTING ASSY	1
2	2		1216144-00	COVER,CONN FOR 12-15815-	1
3	3	C-MD-7420645-0-0	7420645-01	LOCK,ROLLER	2
4	4	C-MD-7423353-0-0	7423353-00	SPRING,BEVELED	1
5	5	C-MD-7420651-0-0	7420651-00	HUB,ENCODER	1
6	6	B-MD-7420652-0-0	7420652-00	CLAMP	1
7	7	C-MD-7420649-0-0	7420649-00	WHEEL,CODE	1
8	8		1216231-00	ROLLER ASSEMBLY,DRIVE	1
9	9		1915721-00	PHOTO SWITCH W/LED &	1
10	10	D-IA-7016017-0-0	7016017-00	CABLE,TAPE DRIVE	1
11	11		1215602-00	MOTOR,12VDC SERVO	1
12	12		1209782-00	SW,MICRO 1P .1A @125V,AG "CROSS	2
13	13		9008025-01	SCREW,PAN,PHIL 2-56X 5/8 SS	2
14	14		9006009-02	*** THIS ITEM IS NOT USED ***	0 - 2
15	15		9008301-01	SCREW,PAN,PHIL 4-40X 1/4 SS	3
16	16		9007031-00	TIE,CABLE BUNDL.DIA 0- 3/4"=101	2
17	17		9007801-00	WASHER, LOCK, S.S. #6	0 - 2
18	18	B-MD-7422968-0-0		*** THIS ITEM IS NOT USED ***	
19	19		9006013-01	SCREW,PAN,PHIL 4-40K 1/2 SS	1
20	20		9006278-10	SCREW,SET ,SKT , 4-40X 1/8	2
21	21		9006021-01	SCREW,PAN,PHIL '6-32X 5/16 SS	1 - 2
22	22	C-MD-7421491-0-0	7421491-00	CLAMP,CABLE	1
23	23		9006631-00	WASHER,LOCK,INT,.1800D X .096ID	3
24	24	C-MD-7423355-0-0	7423355-00	SPRING STRAIGHT SUPPORT	1
25	25		9006001-02	SCREW,FLAT,PHIL, 2-56X 1/4	1
26	26		9006555-00	NUT,HEX , 2-56X3/16AF X 1/	1
27	27		9006010-01	SCREW,PAN,PHIL 4-40X 5/16 SS	2
28	28		9006655-00	WASHER, FLAT, .312 O.D. X .125 I	2
29	29		9006688-00	WASHER, LOCK, S.S. #4	2
30	30		3616582-00	LABEL,SERIAL TU58-XA	1

REVISION HISTORY			BASIC PART NO: 7015510
ENG	ECO NUMBER	REV	SECTION A OF A
D.W	TU58XA-ML003	C	SECTION. VARIATION INDEX
DW	7015510-ML002	D	[A] 00
DW	TU58XA-ML004	E	[B]
			[C]
			[D]
			[E]
			[F]

DRN: D.WARREN — DATE: 24-APR-78

CHK'D: D.HEALY — DATE: 5-DEC-78

DES.ENG.: M.LEIS — DATE: 5-DEC-78

RESP.ENG.: M.LEIS — DATE: 5-DEC-78

MFG.ENG.: R.TAYLOR — DATE: 5-DEC-78

ASSEMBLY NUMBER:

TOP DOCUMENT NUMBER:

D I G I T A L

TITLE: PARTS LIST

CARTRIDGE DRIVE

DOCUMENT NUMBER

SIZE	CODE	NUMBER	REV
K	PL	7015510-0-D8P	E

FILE NAME: Z1610E.PLS

EDIT #: 13

"THIS DRAWING AND SPECIFICATIONS HEREIN, ARE THE PROPERTY OF DIGITAL EQUIPMENT CORPORATION AND SHALL NOT BE REPRODUCED OR COPIED OR USED IN WHOLE OR IN PART AS THE BASIS FOR THE MANUFACTURE OR SALE OF ITEMS WITHOUT WRITTEN PERMISSION.
COPYRIGHT (C) 1981. DIGITAL EQUIPMENT CORPORATION "

AUTOMATED BY PRTLST.3P(44)

P A R T S L I S T

LINE	ITEM	DOCUMENT NUMBER	PART NUMBER	DESCRIPTION		QUANTITY PER VARIATION 00
31	31		9107560-01	WIRE,BUSS,22AWG		A/R
32	32		9006656-00	*** THIS ITEM IS NOT USED	***	-
33	33	C-MD-7423354-0-0	7423354-00	WASHER,LEAF SPRING		2
34	34	B-MD-7423356-0-0	7423356-00	BUTTON,SUPPORT		1
35	35		9007113-01	TERM QUICK .152DIA .250TAB	BR/T	1

DIGITAL	TITLE	SIZE	CODE	DOCUMENT NUMBER	REV
	CARTRIDGE DRIVE SECTION A OF A	K	PL	7015510-0-D8P	E

SIZE	CODE	NUMBER	REV.
B	DD	5413489-Ø	H

DRAWING NO.	NO. OF SHTS.	PART NO.	DESCRIPTION	REVISIONS							
B-DD-5413489-Ø	1		SERIAL TU58	*	A	B	C	D	E	F	H
E-UA-5413489-Ø-Ø	3		SERIAL TU58	C	D	D	E	F	F	H	J
D-CS-5413489-Ø-1	2		SERIAL TU58	C	D	D	E	F	F	H	J
E-MD-5013488-Ø-Ø	4		DRILL & ETCH DRAWING	C	D	D	D	D	D	E	E
		5013488	ETCHED BOARD	D	E	E	E	E	E	F	F
K-PL-5413489-Ø-DBP	-		PARTS LIST DATA BASE (5413489)	C	D	D	E	F	F	H	J
K-PC-5413489-Ø-DBC	-		P.C. DESIGN DATA BASE (5413489)	A	B	B	B	B	B	C	C
E-EC-5013488-0-0	2		ETCH CUT DRAWING	-	-	-	-	-	-	H	H
E-UA-5413489-0-0	3		SERIAL TU58			C1	C1	C1	C1	C1	C1
D-CS-5413489-0-1	2		SERIAL TU58			C1	C1	C1	C1	C1	C1
K-PL-5413489-0-DBP			PARTS LIST DATA BASE			C1	C1	C1	C1	C1	C1
		5013488	ETCH BOARD			D	D	D	D	D	D
E-UA-5413489-0-0	3		SERIAL TU58					-	F1	F1	F1
D-CS-5413489-0-1	2		SERIAL TU58					-	F1	F1	F1
K-PL-5413489-0-DBP			PARTS LIST DATA BASE (5413489)					-	F1	F1	F1
		5013488	ETCH BOARD						E	E	E

NOTES: ~~SPECIAL REVISIONS: FOUND ON SHEET 2~~

REVISIONS								
REV.	*	A	B	C	D	E	F	H
CHG NO.	IST REL	ML001	ML002	ML003	ML004	ML005	ML006	ML007
DATE	8/1/78	11/2/78	1/79	6-79	11-79	7-80	9/10	2/82

"THIS DRAWING AND SPECIFICATIONS, HEREIN, ARE THE PROPERTY OF DIGITAL EQUIPMENT CORPORATION AND SHALL NOT BE REPRODUCED OR COPIED OR USED IN WHOLE OR IN PART AS THE BASIS FOR THE MANUFACTURE OR SALE OF ITEMS WITHOUT WRITTEN PERMISSION.

COPYRIGHT© 1978 DIGITAL EQUIPMENT CORPORATION

digital

USED ON OPTION/MODEL: TU58

DRN.	P. BOSSMAN	6/14/78
CHK'D	[signature]	2/7/79
ENG.	M Leis	8/1/78
PROD.	Peter Baton	8-1-78

TITLE: SERIAL TU58

SIZE	CODE	NUMBER	REV.
B	DD	5413489-Ø	H

SHEET 1 OF 1

DRB 126

ML2

NOTES:
1. C15,11 & R74 NOT USED
2. MOUNT ON COMPONENT SIDE
3. W2 IS OPTIONAL, DO NOT INSTALL.

STEP & REPEAT	+ Y AXIS ____ STEP ____ TIMES
	+ X AXIS ____ STEP ____ TIMES

REV	CHG/CHANGE NO	BY
H	REVISED & REDRAWN	MLB

ETCH REV. F-P1

SIGNATURES	DATE
DRN. D. POWERS	10-17-79
CHK'D.	
MECH. ENG.	
PROJ. ENG.	
PROD.	
SCALE 2/1	
SHT. 1 OF 1	
NEXT HIGHER ASSY. B-EL-5413489-G	

digital

TITLE: SERIAL TU58

SIZE	CODE	NUMBER	REV
E	UA	5413489-00	J

E1-5413489-J

LINE	ITEM	DOCUMENT NUMBER	PART NUMBER	DESCRIPTION	QTY PER VARIATION 00	REFERENCE DESIGNATOR
1	1		5013488-00	TU58 ELECTRONIC SERIAL	1	
2	2		1215816-00	HEADER.100 15POS STRAIGHT	2	J3,J4
3	3		1000021-00	220.0 MMF 100V 5%200PPM MICA	1	C10
4	4		1000023-00	*** THIS ITEM IS NOT USED ***	-	
5	5		1010978-36	.1 MFD 50V 10% CER	3	C8,C16,C47
6	6		1000042-00	1000.0 MMF 100V 5%200PPM MICA	2	C9,C7
7	7		1001610-00	.01 MFD 50V +80-20% 25U CER	17	C2,C17,C27-C33,C35,C36,C38,C40,
					CONT	C41,C42,C43,C45
8	8		1001776-00	1 MFD 35V 10% S.TANT	2	C6,C46
9	9		1002315-00	2000.0 MMF 500V 5%200PPM MICA	1	C12
10	10		1013466-21	3.3 MMF 50V+-.5PF CER	1	C4
11	11		1002431-00	2.2MFD 35V 10% S.TANT	2	C1,C3
12	12		1005306-00	6.8MFD 35V 10% S.TANT	4	C5,C13,C23,C54
13	13		1005334-00	*** THIS ITEM IS NOT USED ***	-	
14	14		1005820-00	22.0 MMF 100V 5%200PPM MICA	1	C11
15	15		1010978-40	.22 MFD 50V 10% CER	1	C19
16	16		1011895-00	.15 MFD 35V 10% S.TANT	1	C18
17	17		1012312-00	*** THIS ITEM IS NOT USED ***	-	
18	18		1100101-00	*** THIS ITEM IS NOT USED ***	-	
19	19		1102808-00	1N 752A VZ= 5.6 5% .40W	1	D27
20	20		1105275-00	D 672 TR= 15NS PIV= 60V SI	25	D1-D13,D31,D33-D43
21	21		1110324-00	LED 1MCD@10MA PIV=3	1	D28
22	22		1115369-00	VM 18 PIV=100 I=1A	2	D15,D16
23	23		1213506-04	HEADER 10POS RT ANGLE W/3 SI	1	J2
24	24		1212385-04	SOCKET 24PIN IC	1	XE1
25	25	USED FOR Q7 & Q12	1213071-06	INSULATOR,RUBBER SILICONE	2	
26	26		1213113-01	*** THIS ITEM IS NOT USED ***	-	
27	27		1213418-01	HEAT SINK,VERTICLE MNT,ALUMINUM	2	
28	28		1300247-00	120.0 .25 W 5.0 % CC	1	R75
29	29		1300274-00	*** THIS ITEM IS NOT USED ***	-	

REVISION HISTORY			BASIC PART NO: 5413489										
ENG	ECO NUMBER	REV	SECTION A OF A	DRN: DAN MUTNANSKY	DATE: 22-MAY-78		D	I	G	I	T	A	L
	INIT	C	SECTION.VARIATION INDEX	CHK'D: P. BOSSMAN	DATE: 6-JUNE-78	TITLE	PARTS LIST						
PB	5413489-ML001	D	[A] 00			SERIAL TU58							
M.L	5413489-ML003	E	[B]										
ML	5413489-ML004	F	[C]	DES.ENG: MIKE LEIS	DATE: 22-MAY-78								
D.M	5413489-ML006	H	[D]			DOCUMENT NUMBER							
			[E]										
			[F]	RESP.ENG.: M. LEIS	DATE: 6-JUNE-78	SIZE	CODE	NUMBER			REV		
			[H]										
			[J]										
			[K]	MFG.ENG.: P. BARTON	DATE: 6-JUNE-78	K	PL	5413489-0-DBP			H		
			[L]										
			[M]	ASSEMBLY NUMBER:	TOP DOCUMENT NUMBER:		FILE NAME:				EDIT #		
			[N]	E-UA-5413489-0-0	TU58		Z0582H.PLS				38		

*THIS DRAWING AND SPECIFICATIONS HEREIN, ARE THE PROPERTY OF DIGITAL EQUIPMENT CORPORATION AND SHALL NOT BE REPRODUCED OR COPIED OR USED IN WHOLE OR IN PART AS THE BASIS FOR THE MANUFACTURE OR SALE OF ITEMS WITHOUT WRITTEN PERMISSION.
COPYRIGHT (C) 1980, DIGITAL EQUIPMENT CORPORATION *

LINE	ITEM	DOCUMENT NUMBER	PART NUMBER	DESCRIPTION	QTY PER VARIATION 00	REFERENCE DESIGNATOR
30	30		1300316-00	470.0 .25 W 5.0 % CC	5	R5,R55,R100,R78,R84
31	31		1300365-00	1.0 K .25 W 5.0 % CC	2	R10,R18
32	32		1300295-00	*** THIS ITEM IS NOT USED ***	-	
33	33		1300447-00	4.70 K .25 W 5.0 % CC	8	R11,R19,R20,R25,R54,R79,R76,R105
34	34		1300479-00	10.0 K .25 W 5.0 % CC	21	R9,R22,R24,R26,R44,R46,R50,R58,
					CONT	R59,R66,R67,R68,R80,R33,R36,R96,
					CONT	R86,R73,R97-R99
35	35		1301322-00	180.0 .25 W 5.0 % CC	1	R31
36	36		1301327-00	68.0 K .25 W 5.0 % CC	1	R72
37	37		1300432-00	3.0 K .25 W 5.0 % CC	1	R6
38	38		1301969-00	22.0 .25 W 5.0 % CC	1	R29
39	39		1302092-00	220.0 K .25 W 5.0 % CC	1	R51
40	40		1302177-00	47.0 K .25 W 5.0 % CC	2	R14,R23
41	41		1302388-00	2.0 K .25 W 5.0 % CC	5	R27,R28,R34,R37,R85
42	42		1302391-00	20.0 K .25 W 5.0 % CC	1	R83
43	43		1302394-00	30.0 K .25 W 5.0 % CC	2	R52,R106
44	44		1302396-00	150.0 K .25 W 5.0 % CC	2	R8,R81
45	45		1302398-00	470.0 K .25 W 5.0 % CC	4	R7,R21,R45,R57
46	46		1302941-00	14.70 K .25 W 1.0 % RN55D-F10	3	R13,R16,R56
47	47		1303177-00	2.40 K .25 W 5.0 % CC	8	R17,R30,R41,R42,R43,R60,R69,R71
48	48		1303312-00	10.0 K .25 W 1.0 % RN55D-F10	2	R12,R15
49	49		1305324-00	4.99 K .25 W 1.0 % RN55D-F10	4	R38,R39,R47,R49
50	50		1309386-00	5.60 M .25 W 5.0 % CC	1	R40
51	51		1001610-01	*** THIS ITEM IS NOT USED ***	-	
52	52		1311466-C0	.20 2.0 W 5.0 % WW	1	R53
53	53		1313596-00	20.0 K .25 W 1.0 % RN55D-F10	2	R77,R102
54	54		1315660-00	R NETWORK 16-10K 1-4.7K 20PIN	1	R2
55	55		1315661-00	R NETWORK MULTI-VALUE	2	R1,R4
56	56		1315662-00	R NETWORK 14-2.4K 10.0 % 15PIN	1	R3
57	57		1503409-00	DEC6534D PNP 310MW SI 40 90	2	Q2,Q4
58	58		1509142-00	DEC4250 PNP 200MW SI 40250	1	Q1
59	59		1509338-00	DEC6531B NPN 310MW SI 40 90 P	6	Q3,Q5,Q8,Q11,Q14,Q17
60	60		1510421-00	D 44C8 NPN 30WT SI 60 20	4	Q6,Q7,Q12,Q13
61	61		1510598-00	DEC45C8 PNP 27WT SI 60 20 Y	4	Q9,Q10,Q15,Q16
62	62		1812396-06	XTAL 4.9152 MHZ	1	Y1
63	63		1910282-00	301AN OP AMP	1	E30
64	64		1910645-00	75452 DRIVER,PERIPH,DUAL,	4	E9,E10,E26,E27
65	65		1910741-00	7406 INVERTER GATE-HEX 1I	1	E8
66	66		1911242-00	*** THIS ITEM IS NOT USED ***	-	
67	67		1912107-00	324 OP AMP,QUAD	1	E15
68	68		1912108-00	339 VOLT CMPRTR,QUAD	1	E29
69	69		1912799-00	LS00 NAND-GATE-QUAD 2IN,P	2	E17,E19
70	70		1912801-00	LS02 NOR-GATE-QUAD 2IN	1	E13
71	71		1912803-00	774LS04 INVERTER GATE, HEX	2	E6,E25
72	72		1912807-00	LS10 NAND GATE-TRIPLE 3IN	1	E24
73	73		1912813-00	LS27 NOR GATE-TRIPLE 3IN	1	E18
74	74		1912832-00	LS107 FF-JK DUAL MASTER/SL	2	E5,E12
75	75		1912857-00	LS197 COUNTER,BINARY,PRESET	1	E7

D	I	G	I	T	A	L	TITLE	SIZE	CODE	DOCUMENT NUMBER	REV
							SERIAL TU58	K	PL	5413489-0-DBP	H
							SECTION A OF A				

LINE	ITEM	DOCUMENT NUMBER	PART NUMBER	DESCRIPTION	QTY PER VARIATION 00	REFERENCE DESIGNATOR
76	76		1914451-00	74LS393 COUNTER,BINARY,4BIT	1	E33
77	77		1914466-00	3130E OP AMP MOS/FET IN,CM	1	E28
78	78		1915219-00	LS373 FF-D OCTAL-TRANSPARE	1	E11
79	79		1915415-00	9636 DRIVER,DUAL,EIA RS-	1	E32
80	80		1915416-00	9637 RECEIVER,DUAL,RS-42	1	E34
81	81		1915417-00	9638 DRIVER,DUAL,EIA RS-	1	E31
82	82		2113605-00	4006B SHIFT REG,18 STAGE	1	E14
83	83		2113609-00	4013B FF-D DUAL W/SET/RESE	1	E4
84	84		2113630-00	4052B MULTIPLEXER 4CHAN DI	1	E35
85	85		2113632-00	4066B BILATERAL SWITCH-QUA	1	E22
86	86		2113634-00	4070B X-OR GATE-QUAD CMOS	1	E21
87	87		2113937-00	UART 125K BUAD	1	E16
88	88		2114663-00	MM 80C95 BUFFER-GATE-HEX TRIS	1	E36
89	89		2114963-00	UP,8-BIT NMOS	1	E2
90	90		2114964-00	RAM 2048 MOSJ-STATIC	1	E3
91	91		23089E2-00	E2-01	1	E1
92	92		1212619-07	HEADER.156 6POS STRAIGHT	1	J1
93	93		9009185-00	JUMPER, WIRE, INSULATED, BLACK B	2	W1,W3
94	94	USED FOR Q7 & Q12	9010057-00	WASHER, INSULATING SHOULDER FOR	2	
95	95		1215816-01	HEADER.100 3POS STRAIGHT	1	
96	96		1215816-02	HEADER.100 13POS STRAIGHT	1	
97	97		1215816-03	HEADER.100 8POS STRAIGHT	1	
98	98		9006011-01	SCREW,PAN,PHIL 4-40X 3/8 SS	2	
99	99		9006557-00	NUT,KEP , 4-40X 1/4 AF	2	
100	100		1100124-00	1N 750A VZ= 4.7 5% .40W P	2	D29,D30
101	101		1301890-00	560.0 .25 W 5.0 % CC	2	R32,R35
102	102		1313840-00	4.53 K .25 W 1.0 % RN55D-F10	1	R48
103	103		9105740-55	WIRE(WRAP)30AWG UL1423	A/R	
104	104		1012084-03	150 MFD 15V +75-10% AL EL	2	C44,C14
105	105		9107256-11	*** THIS ITEM IS NOT USED ***	-	
106	106		1910741-01	7406N BUFFER,HEX	1	E20
107	107		5414232-00	*** THIS ITEM IS NOT USED ***	-	
108	108		1310633-00	2.55 K .25 W 1.0 % RN55D-F10	1	R101
109	109		1300488-00	12.0 K .25 W 5.0 % CC	1	R103
110	110		1302466-00	100.0 K .25 W 5.0 % CC	1	R104
111	111		1105871-00	1/4M5.1AZ1 = 5.1 1% .25W N	1	D32
112	112		1914156-00	LM 393 VOLT.COMPARATOR DUAL	1	E37
113	113		1912098-00	0026 DRIVER,MOS CLOCK,2	1	E38
114	114		1010274-01	.22 MFD 50V +80-20% Z5U CER	4	C50-C53
115	115		1010279-00	.47 MFD 25V 20% CER	3	C20,C21,C49

D	I	G	I	T	A	L	TITLE	SECTION A OF A	SIZE	CODE	DOCUMENT NUMBER	REV
							SERIAL TU58		K	PL	5413489-0-DBP	H

"THESE DRAWING AND SPECIFICATIONS, HEREIN, ARE THE PROPERTY OF DIGITAL EQUIPMENT CORPORATION AND SHALL NOT BE REPRODUCED OR COPIED OR USED IN WHOLE OR IN PART AS THE BASIS FOR THE MANUFACTURE OR SALE OF ITEMS WITHOUT WRITTEN PERMISSION.
COPYRIGHT © , DIGITAL EQUIPMENT CORPORATION"

CART L
N/C
PERMIT L
S GND
MOTOR +
MOTOR −
+12V
TACH
LED
H GND
ERASE RT
ERASE I
ERASE Ø
HEAD RT
HEAD Ø
HEAD I
J3/J4 TYPICAL CONNECTION

E11 88 REG 74LS373 LATCH
ALE
OCE
R97 10K
A11
W2
E1 8316E ROM 2K×8
W3
R98 10Ω
A11
AD0 AD1 AD2 AD3 AD4 AD5 AD6 AD7

R58 10K R57 10K
R60 22K
+5V
READY
HOLD
INTR
TRAP
TRAP H
X1 4.9152 MHz
X2
RESET L
RESET IN
E2 8085 CPU
AD0 AD1 AD2 AD3 AD4 AD5 AD6 AD7
A8 A9 A10 A11 A12 A13 A14 A15
S0 S1 ALE WR RD
S0 H S1 H ALE WRL RDL
INTA HLDA RESET OUT CLOCK IO/M SOD
RESET H CLK H IO/M WPT DATA H
RST 5.5 RST 6.5 RST 7.5 SID
RST 5.5 RST 6.5
RD STROBE H
RD DATA −

+12V R100 470 R101 2.55K 1% R102 20K 1% R103 12K R99 10K
D32 5.1V
+5V R66 10K
E37 393
M RESET L
D33 D672
C99 .47µf R104 100K +5V
A13 IO/M RDL
E18 LS27
RESET L
R67 10K
E24 LS04
(RAMCS L)
A14 A15 A12 A13
E19 LS04
E3 RAM I/O TIMER 8155
RESET H CLK H
TIMER IN
TIMER OUT
PC5 PC4 PC2 PC3 PC1 PC0 PB7 PB6 PB5 PB4 PB3 PB2 PB1 PB0 PA7 PA6 PA5 PA4 PA3 PA2 PA1 PA0
TMR OUT L
R74 4.7K
D28
R78 470Ω
OTP1
OTP3
BOOT L
+3Ø IPS H
ERASE ENA L
CAM RESCUE L
SEL TRK Ø L
SEL DRV B L
REVERSE H
WRT ENB H
RUN L
MARK H
(SW BOOT L)
OE
RJN TP L
A CART L
B CART L
VEL TP H
WRT PERMIT L
R68 10K
R79 10K
R80 10K

E5 LS107
E12 LS107
MARK H
R69 2.4K +5V
+3V
TMR OUT L
E25

E7 BIN CTR. 74LS197
1D-A 1D-B 2D-B 4D-B CLK A CLK B LOAD CLR
1R-A 1R-B 2R-B 4R-B
CHG CLK H.
38.4KB CLK H
3ØIPS H
E29 LS04
E12 LS107
VEL CLK H
CLK H
+3

E33 DUAL BIN CTR 74LS393
38.4KB CLK H
RESET H
CLKA CLKB CLR0A CLR0B
1R-B 2R-B 4R-B 8R-B 1R-A 2R-A 4R-A 8R-A
12K 6.49K 3.09K 1.5K 19.2K 9.76K 4.88K 2.4K
38.4K
WW0 WW1 WW2 WW3 WW4 WW5 WW6 WW7 WW8 WW9
(RCV CLK) (XMIT CLK) AUX B AUX A
E25
R3A 2.4K
E24 LS10
R3M 2.4K 1%
R3J 2.4K
R71 2.4K
RDL IO/M WRL
A3
+5V +12V
E16 UART 6402
Vcc
RRD DRR TBRL TRC RRC TRC
TRO RRI SFD CLS1 CLS2 EPE CRL PI TBRE PE OE DR FE TRFC
R3N 15 2.4K +5V
RST 5.5 OE RST 6.5 TRAP H
HC SFD BRT
R3K 2.4K +5V
R72 68K -12V
E32 9636
E34 9637
E35 9638
XMIT+ XMIT− AUX A AUX B CCV+ RCV−
J2
R75 220
R76 4.7K +5V
R73 10K +5V
C27 THRU C32, C35, C36, C38, C40 THRU C43 .1µf
C33 .1µf
GND +12V
CHG CLK H
E17 74LSØØ
E38 MHØØ26
C50 .22µf D35 D672
D39 D672
C53 .22µf -12V
C54 6.8µf
C23 6.8µf
C51 .22µf D36 D672
C52 .22µf +5V
INTERFACE

REVISIONS				
CHR	CHANGE NO.	REV.		
DB	5413489-ML001	D	M LEIS	
DB	5413489-ML003	E	M LEIS	
DB	5413489-ML004	F	M LEIS	
DB	5413489-ML006	H	M LEIS	
DB	5413489-ML007	J	E. SMITHER	

DRN. M. LEIS	5/76	FIRST USED ON: TU58
CHK'D M LEIS	7-20-76	digital
ENG. ROSE/LEIS	7/78	TITLE: TU58 ELECTRONICS: SERIAL
PROJ. ENG.	8/11/78	
PROD.	8-1-78	
NEXT HIGHER ASSY.	B-DD-5413489-0	SIZE D CODE CS NUMBER 5413489-0-1 REV. J
SCALE		
SHEET 1 OF 2		DIST.

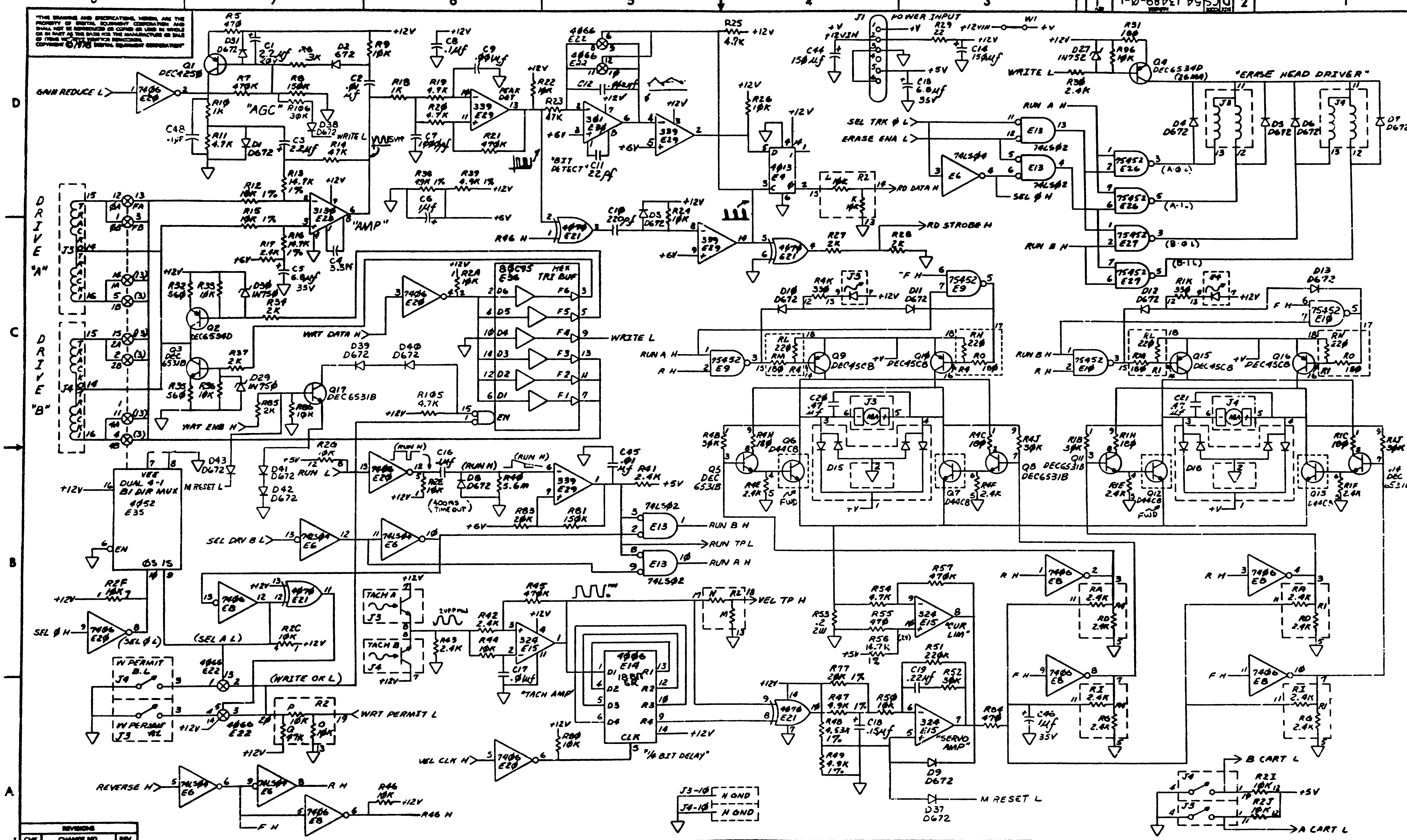

TITLE	SIZE	CODE	NUMBER	REV.
TU58 ELECTRONICS: SERIAL	D	CS	54 13489-Ø-1	J

SCALE —/— SHEET 2 OF 2

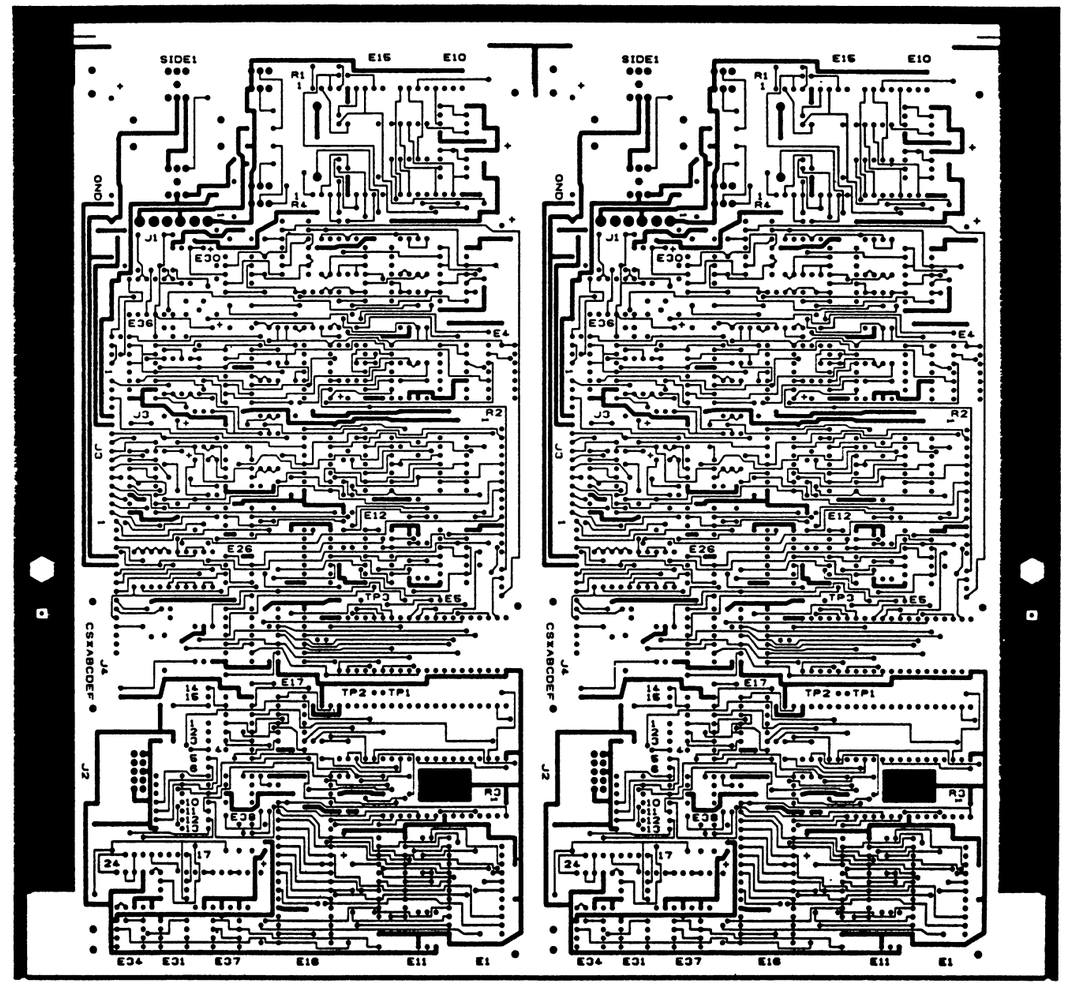

DRN D. Powers	10-6-79
CHK	
ENG	
PROJ ENG	
PROD	
NEXT HIGHER ASSY	
E-UA-5413489-0-0	
SCALE 2:1	
SHEET 1 OF 2	

TITLE
ETCH CUT DRAWING

SIZE	CODE	NUMBER	
E	EC	5013488-0-0	H
DIST			

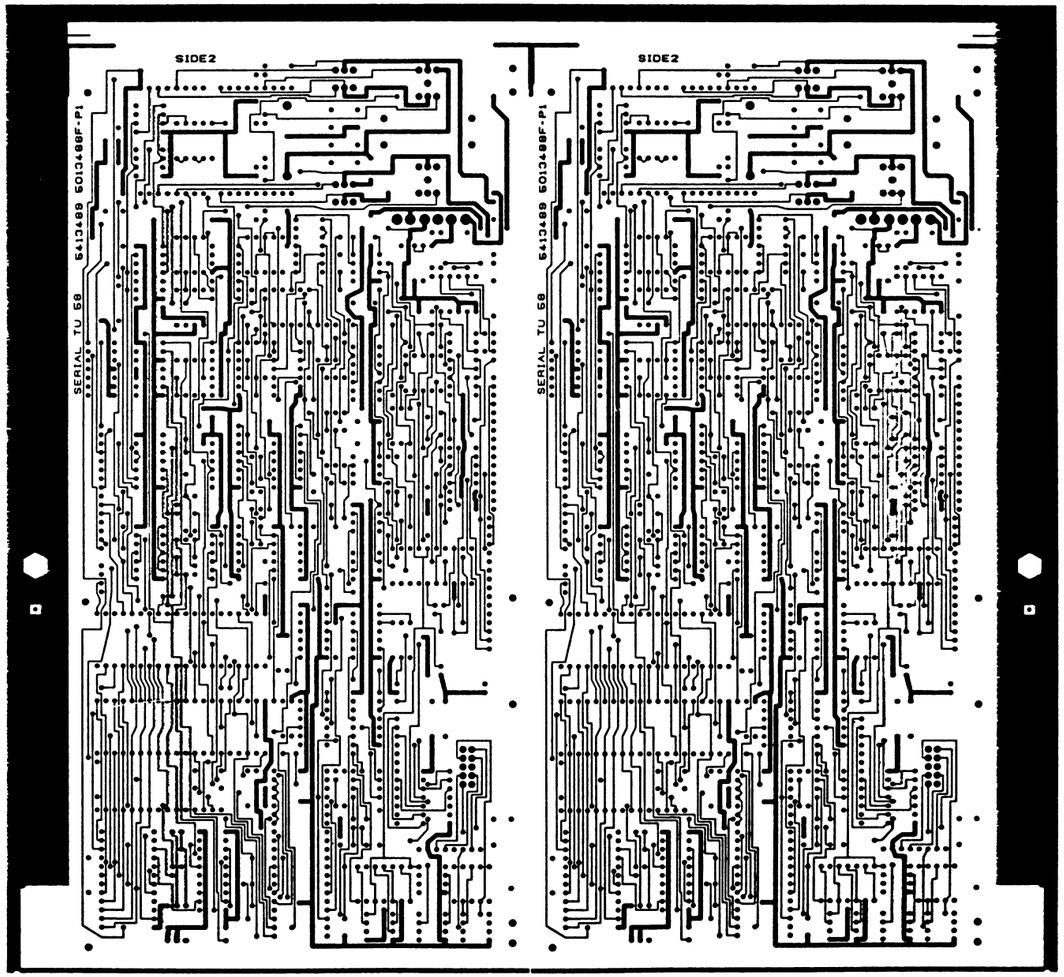

TITLE	SIZE	NUMBER	REV
ETCH CUT DRAWING	E	EC 5013488-00	H
SCALE	SHEET 2 OF 2	DWT	

"THIS DRAWING AND SPECIFICATIONS, HEREIN, ARE THE PROPERTY OF DIGITAL EQUIPMENT CORPORATION AND SHALL NOT BE REPRODUCED OR COPIED OR USED IN WHOLE OR IN PART AS THE BASIS FOR THE MANUFACTURE OR SALE OF ITEMS WITHOUT WRITTEN PERMISSION.
COPYRIGHT © 1978, DIGITAL EQUIPMENT CORPORATION"

NUMBER	DIM "X" VARIATION	DIM "Y" (PRECUT)
7016305-03	3 FT ± 1.0 IN.	3 FT. 3 IN
7016305-1F	1 FT 6 IN ± 1.0 IN.	1 FT 9 IN.
7016305-0K	9 IN. ± .5 IN.	10 IN.

NOTES

1. INSERT KEY IN #5 CONNECTOR PIN HOLE AND BREAK OFF TAB
2. USE CRIMP PRESS 3M # 3440 OR #3445 AND LOCATER GUIDE 3M #3443-9 TO CRIMP ITEM #2.
3. USE AMP. LATCH PIN TOOLING ASSY. #91140-2 WITH MANUAL UNIT #91085-2 OR PNEU. UNIT #91112-2 TO ATTACH ITEM 4 TO CABLE
4. REMOVE PIN #5 FROM CONNECTOR ITEM #4 BEFORE ASSEMBLY WITH CABLE.

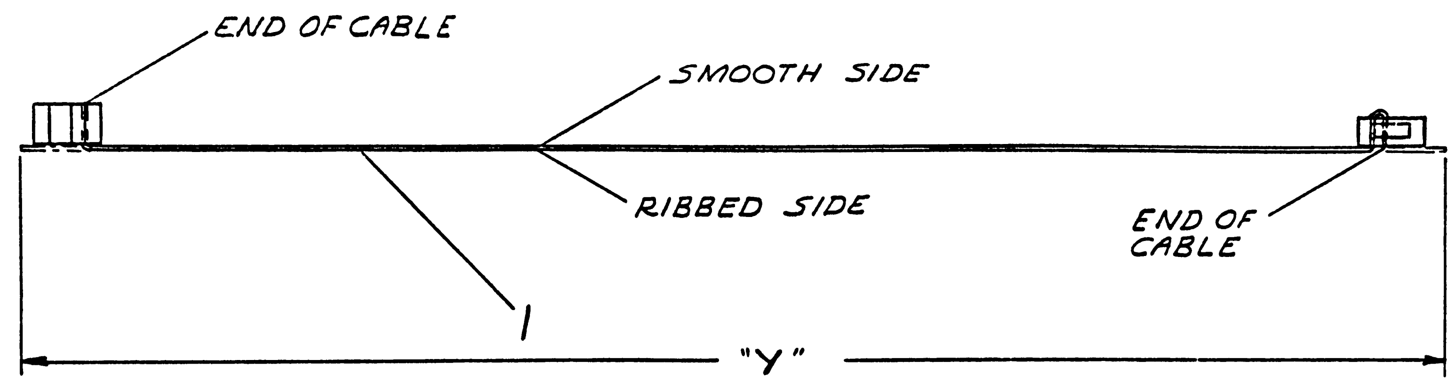

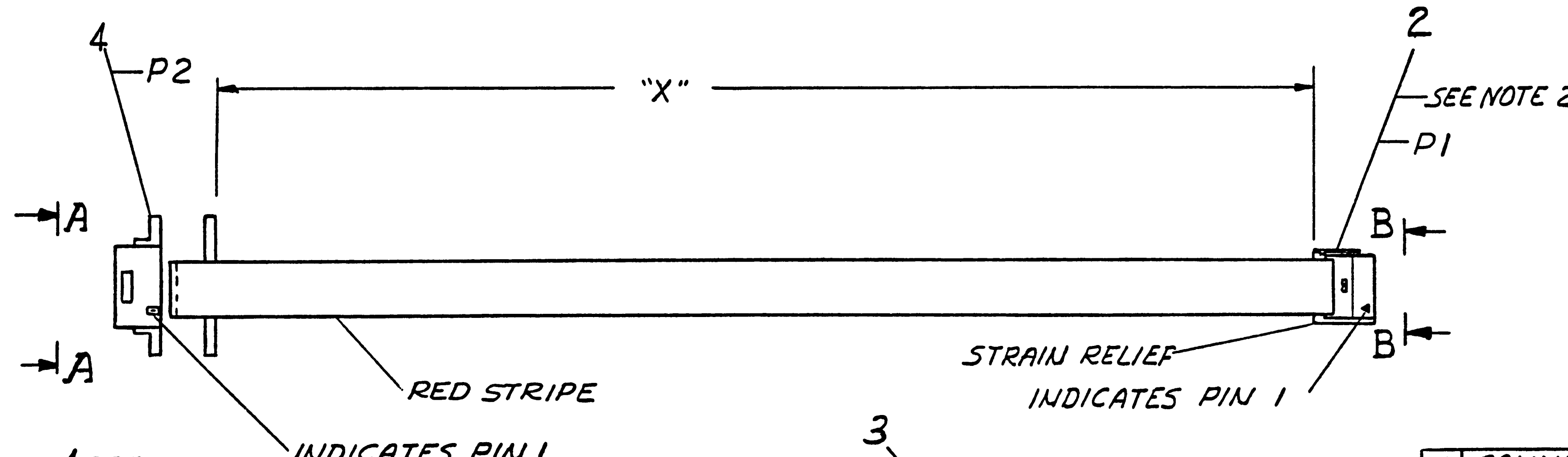

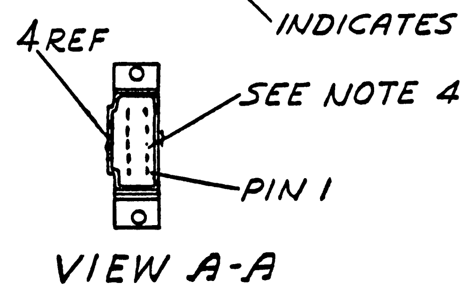

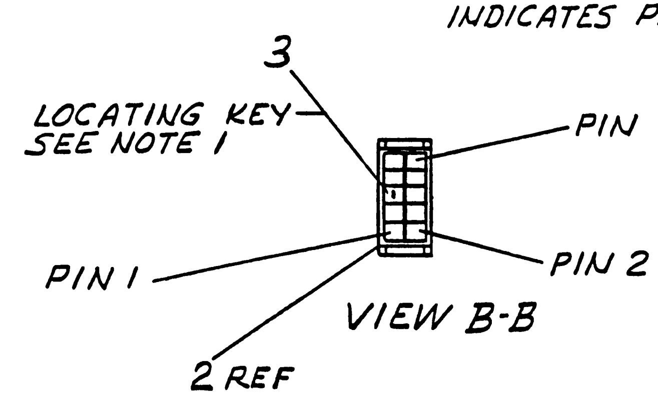

QTY	DESCRIPTION	DWG./PART NO.	ITEM NO.
1	CONNECTOR, CRIMP	1213039-02	4
1	KEY	9009707-00	3
1	CONNECTOR, CRIMP	1211206-02	2
A/R	CABLE, 10 CONDUCTOR	9107747-02	1

QUANTITY & VARIATION

UNLESS OTHERWISE SPECIFIED DIMENSIONS ARE IN INCHES

ANGLES ±0° 30'

SURFACE QUALITY IN √ MICROINCHES

CLASS OF ACCURACY (CHECK ONE)	OVER 0 TO 0.2	OVER 0.2 TO 1.2	OVER 1.2 TO 4.0	OVER 4.0 TO 12.0	OVER 12.0 TO 40.0	OVER 40.0 TO 80.0
MEDIUM ☐	±.004	±.008	±.012	±.016	±.024	±.04
PREFERRED ☐	±.012	±.016	±.025	±.04	±.063	±0.1

THIRD ANGLE PROJECTION

REMOVE BURRS AND BREAK SHARP CORNERS

DO NOT SCALE DWG

MATERIAL SEE PARTS LIST

FINISH —

DRN.	[signature]	5 SEP 78
CHK'D	[signature]	1 NOV 78
ENG.	P. Lorusso	1 NOV 78
PROJ. ENG.	[signature]	2 NOV 78
PROD.	[signature]	15 NOV 78

NEXT HIGHER ASSY. E-UA-TU58-C-Ø

SCALE NONE

SHEET 1 OF 1

FIRST USED ON TU58

digital

TITLE CABLE, SERIAL TU58

SIZE	CODE	NUMBER	REV.
C	IA	7016305-0-0	B

DIST.

ML2

REVISIONS

CHK	CHANGE NO.	REV.
[initials]	TU58C-ML003 Carl A. Colm 10/6/80 D. WARREN	A
D Warren 10/16/80	DC 7016305-ML0011 Helen R. ... 6/11/81 KEN OKIN	B
	Ken Okin 6/11/81	

SIZE C CODE IA NUMBER 7016305-0-0 REV. B

DEC FORM NO. DRC 100-C

MAKEPEACE P-1869

8 | 7 | 6 | 5 | 4 | 3 | 2 | 1

SIZE D CODE IA NUMBER 7018166-0-0 REV A

"THIS DRAWING AND SPECIFICATIONS HEREIN ARE THE PROPERTY OF DIGITAL EQUIPMENT CORPORATION AND SHALL NOT BE REPRODUCED OR COPIED OR USED IN WHOLE OR IN PART AS THE BASIS FOR THE MANUFACTURE OR SALE OF ITEMS WITHOUT WRITTEN PERMISSION
COPYRIGHT © 1981 DIGITAL EQUIPMENT CORPORATION"

WIRE TABLE

ITEM NO	DESCIPTION AWG	DESCIPTION COLOR	FROM CONN	FROM WITH	TO CONN	TO WITH	REMARKS
6	18	ORN	P1-1	3	P2-1	4	+12V
7	18	BLK	P1-3	3	P2-2	4	+12V RTN
8	18	RED	P1-5	3	P2-3	4	+5V
7	18	BLK	P1-6	3	P2-4	4	+5V RTN

LEGEND

NUMBER	DIM "X" VARIATION	DIM "Y" (PRECUT) REF
7018166-1B	14 IN ± .5 IN	14.5 IN ± .5 IN

NOTES:
1 ATTACH CABLE TIES (ITEM 5) APPROXIMATELY EVERY 3 INCHES AS SHOWN.
2 INSERT KEY PLUG (ITEM 9) INTO POSITION 4 OF P1 FROM THIS END.
3. THERE SHOULD BE NO SOCKET OR KEY INSTALLED IN ITEM 1 POSITION 2 OF P1.
4 ALL WIRE ENDS TO BE STRIPPED.

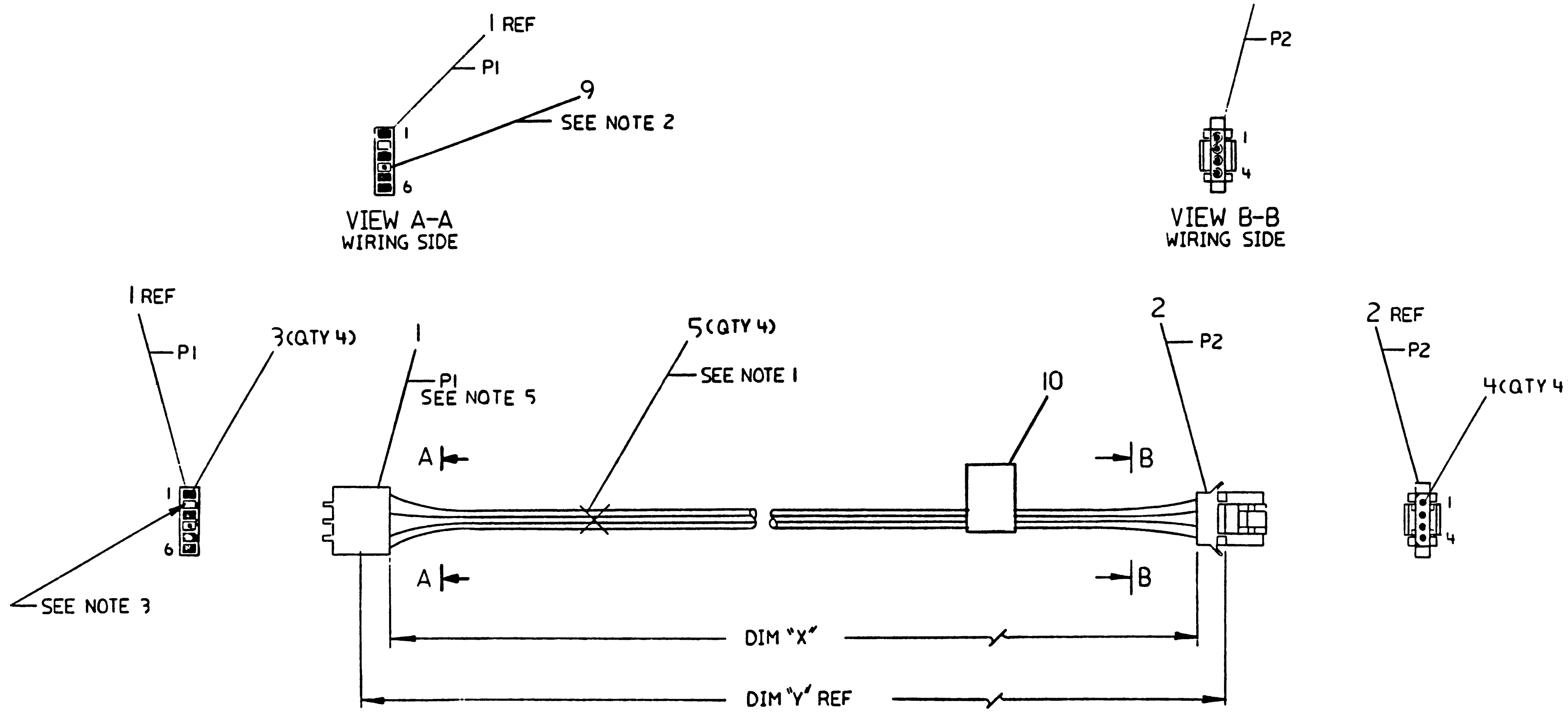

SEE CFF SHEET PARTS LIST
K-PL-7018166-0-DBP

DESCRIPTION	DRAWING NO	PART NO	ITEM NO

UNLESS OTHERWISE SPECIFIED DIMENSIONS ARE IN INCHES AND THE FOLLOWING TOLERANCES APPLY (PER DEC STD 114)

QUANTITY & VARIATION

INCHES TOLERANCES: X = ± .1, XX = ± .02, XXX = ± .005
ANGLES ± 0° 30'
SURFACE QUALITY — MICROINCHES

APPLICABLE DIMENSION RANGE (CHECK ONE)	OVER 0 TO 0.2	OVER 0.2 TO 1.2	OVER 1.2 TO 4.0	OVER 4.0 TO 12.0	OVER 12.0 TO 40.0	OVER 40.0 TO 80.0
☐	± .02		± .03	± .05	± .10	
☐	± .004	± .008	± .012	± .016	± .024	± .04
☐						

THIRD ANGLE PROJECTION

DO NOT SCALE DRAWING

REMOVE BURRS AND BREAK SHARP CORNERS

MATERIAL: SEE PARTS LIST

FINISH: —

		DATE
DRN	R.L. Tousignant	7/19/81
CHK'D	R.P. Morin	9 AUG 81
DES ENG	R.P. Morin	9 AUG 81
RESP ENG	R.P. Morin	9 AUG 81
MFG ENG	S. Castiglione	13 OCT 81

NEXT HIGHER DOC: E-AD-7018114-0-0

TITLE: digital
CABLE, TU BULKHEAD POWER

DOCUMENT NUMBER: SIZE D CODE IA NUMBER 7018166-0-0 REV A

SCALE 1/1 SHEET OF

TW

REVISION HISTORY

DATE	ECO NUMBER	REV
22 Jul 81	RELEASED AT REV A FROM REV X5 m.B.	A

DRD 1000

SIZE D CODE IA NUMBER 7018166-0-0 REV A

AUTOMATED BY PRTLST.3P(44) — P A R T S L I S T — SHEET A1 OF A1

LINE	ITEM	DOCUMENT NUMBER	PART NUMBER	DESCRIPTION	QUANTITY PER VARIATION IB
1	1		12122Ø2-Ø9	CONN 6POS HOUSING	1
2	2		1218691-ØØ	RCPT 4PIN KEYED	1
3	3		1212203-ØØ	PIN CRIMP TYPE	4
4	4		1218Ø2Ø-ØØ	SKT 16-18AWG REEL	4
5	5		9ØØ7Ø31-ØØ	TIE,CABLE BUNDL,DIA Ø- 3/4"=101	4
6	6	SEE NOTE	9107786-33	WIRE,STRND,16AWG UL1430 Ø	15
7	7	SEE NOTE	9107786-ØØ	WIRE,STRND,18AWG UL1430	30
8	8	SEE NOTE	9107786-23	WIRE,STRND,18AWG UL1430 R	15
9	9		1216113-ØØ	CONN KEYING PLUG	1
10	10		9ØØ9255-Ø1	LABEL, POWER SUPPLY, 2-7/8" LG X	1

11 NOTE: ITEMS 6,7 AND 8 ARE IN INCHES.

REVISION HISTORY			BASIC PART NO: 7Ø18166									
ENG	ECO NUMBER	REV	SECTION A OF A	DRN: P. TOUSIGNANT	DATE: 23-JUL-81		D	I	G	I	T	A	L
---	INITIAL	A	SECTION. VARIATION INDEX [A] IB	CHK'D: A. ROCHA	DATE: 23-JUL-81	TITLE	PARTS LIST						
			[B]	DES.ENG.: R. MORIN	DATE: 23-JUL-81	TU BULKHEAD POWER CABLE							
			[C]	RESP.ENG.: R. MORIN	DATE: 23-JUL-81	DOCUMENT NUMBER							
			[D]			SIZE	CODE	NUMBER				REV	
			[E]	MFG.ENG.: S. CASTIGLIONE	DATE: 23-JUL-81	K	PL	7Ø18166-Ø-DBP				A	
			[F]	ASSEMBLY NUMBER: D-IA-7Ø18166-Ø-Ø	TOP DOCUMENT NUMBER: E-AD-7Ø18114-Ø-Ø	FILE NAME: Z1854A.PLS						EDIT # 11	

"THIS DRAWING AND SPECIFICATIONS HEREIN, ARE THE PROPERTY OF DIGITAL EQUIPMENT CORPORATION AND SHALL NOT BE REPRODUCED OR COPIED OR USED IN WHOLE OR IN PART AS THE BASIS FOR THE MANUFACTURE OR SALE OF ITEMS WITHOUT WRITTEN PERMISSION.
COPYRIGHT (C) 1981. DIGITAL EQUIPMENT CORPORATION "

"THIS DRAWING AND SPECIFICATIONS, HEREIN, ARE THE PROPERTY OF DIGITAL EQUIPMENT CORPORATION AND SHALL NOT BE REPRODUCED OR COPIED OR USED IN WHOLE OR IN PART AS THE BASIS FOR THE MANUFACTURE OR SALE OF ITEMS WITHOUT WRITTEN PERMISSION.
COPYRIGHT © 1975 , DIGITAL EQUIPMENT CORPORATION"

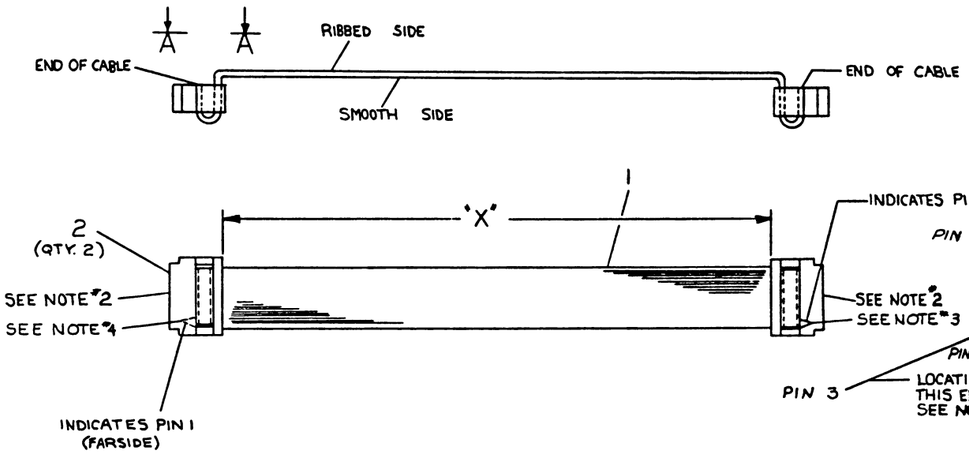

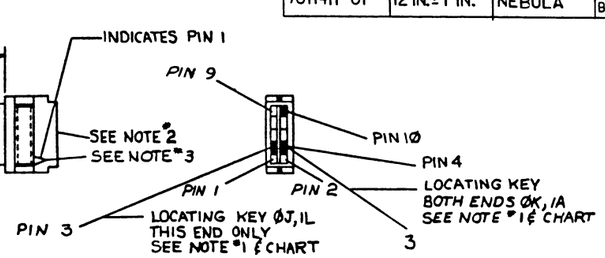

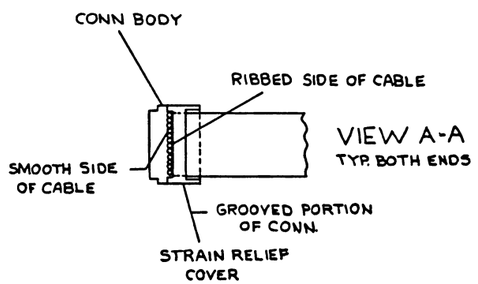

LEGEND

NUMBER	DIM "X" VARIATION	USED ON	KEY PIN
7011411-ØJ	8 IN ± .5 IN.	BA11-L OR K	10 ONE END
7011411-ØK	9 IN ± .5 IN.	LSI-11	4 BOTH ENDS
7011411-1D	1 FT-4 IN ± 1 IN.	KY11-LB	
7011411-2D	2 FT-4 IN ± 1 IN.	BA11-F/DD11PF	10 ONE END
7011411-ØH	7 IN ± .5 IN.	H79Ø, 1, 2, 3	
7011411-1J	1 FT.-8 IN ± 1 IN.	1104/34-7A	
7011411-1L	1 FT. 10 IN. ± 1 IN.	BA11-L, H777	PIN 3 1 END
7011411-1A	1 FT.-1 IN. ± 1 IN.	H787	4 BOTH ENDS
7011411-3J	3 FT.-8 IN ± 1 IN.	BA11-K, H785	
7011411-2J	2 FT.-8 IN ± .1 IN.	BA11K-H785	NO KEY
7011411-5F	5 FT.-6 IN ± 1 IN	1160	8 ONE END
7011411-12	12 FT ± 3 IN.	XA57Ø	
7011411-7	7 FT ± 2 IN	11780	
7011411-1C	1 FT-3 IN ± 1 IN	VT1Ø3	SEE NOTES 3 AND 4
7011411-2	2 FT ± 1 IN	VT1Ø3	SEE NOTES 3 AND 4
7011411-ØE	5 IN ± .5 IN	NEBULA	10 BOTH ENDS
7011411-3D	3 FT-4 IN ± 1 IN	NEBULA	5 BOTH ENDS
7011411-ØF	8 IN ± .5 IN	11/24	PIN 3 ONE END PIN 6 ONE END
7011411-1B	1 FT-2 IN ± 1 IN.	H333-A/DPM50	4 BOTH ENDS
7011411-YA	2 FT. ± 1 IN.	NEBULA	PIN 5 BOTH ENDS
7011411-01	12 IN. ± 1 IN.	NEBULA	PIN 10 BOTH ENDS

NOTES:

1. INSERT KEY IN PROPER CONNECTOR PIN AND BREAK OFF TAB.
2. FOR ITEM (2) DRAWING IS SHOWING 3M CONNECTOR.
3. FOR -1C AND -2 VARIATIONS, KEY PIN 6.
4. FOR -1C AND -2 VARIATIONS, KEY PIN 5.

REVISIONS			
CHK	CHANGE NO.	REV.	
	7011411-00011	M	REDRAWN & REVISED STEVE MILLER 26 MAY 77
K DUGGAN			
	7011411-00012	N	E. ANTON 10 MAR 78
E. ANTON			E. Anton 22 MAR 78
	7011411-TW013	P	R. Wilson 10 Aug 79
R. WILSON			
L. SCHANIN			L. Schanin 3 JAN 79
	7011411-TW014	R	
D. SCHANIN			D. Schanin 3 DEC 79
	7011411-TW015	S	
D. BARRY			D. Barry 4 JAN 80
	7011411-TW016	T	
BOB SILVER			Bob Silver 2 OCT 80
	7011411-TW017	U	
M. BANGERT			M. Bangert 11 JUNE 81
	7011411-TW018	V	
RAY GRUDA			Ray Gruda 12-11-81
	7011411-TW019	W	
R DAY			R Day 2-23-82
			DM Hendry 9-MAR-82

	DESCRIPTION	DWG./PART NO.	ITEM NO.
1	TIE, CABLE	9007031	5
1	LABEL, CABLE IDENT.	9009532	4
A/R	KEY	9009707	3
2	CONN. CRIMP	1211206-02	2
A/R	CABLE, 10 CONDUCT	9107747-02	1

UNLESS OTHERWISE SPECIFIED DIMENSIONS ARE IN INCHES

SURFACE QUALITY IN MICROINCHES	CLASS OF ACCURACY (CHECK ONE)	ANGLES ±0° 30'	NOMINAL DIMENSION RANGE INCHES: OVER 0 TO .12	OVER .12 TO .4	OVER .4 TO 1.2	OVER 1.2 TO 4.0	OVER 4.0 TO 12.0	OVER 12.0 TO 40.0	OVER 40.0 TO 80.0
✓	MEDIUM ☐	±.004	±.008	±.012	±.016	±.024	±.04		
	PREFERRED ☐	±.012	±.016	±.026	±.04	±.063	±0.1		

QUANTITY & VARIATION

7011411-0-0

THIRD ANGLE PROJECTION

REMOVE BURRS AND BREAK SHARP CORNERS

DO NOT SCALE DWG

MATERIAL SEE PARTS LIST

FINISH

DRN	M BAPTIST	5-20-75
CHK'D	D HEALY	6-13-75
ENG.	R BARRY	6-18-75
PROJ. ENG.	R BARRY	6-18-75
PROD.	R PETERSON	6-19-75

NEXT HIGHER ASSY.

SCALE NONE

SHEET 1 OF 1

FIRST USED ON SEE LEGEND

digital

TITLE

CABLE CONSOLE BACKPLANE

SIZE	CODE	NUMBER	REV.
D	1A	7011411-0-0	W

DIST.

TW 1

"THIS DRAWING AND SPECIFICATIONS, HEREIN, ARE THE PROPERTY OF DIGITAL EQUIPMENT CORPORATION AND SHALL NOT BE REPRODUCED OR COPIED OR USED IN WHOLE OR IN PART AS THE BASIS FOR THE MANUFACTURE OR SALE OF ITEMS WITHOUT WRITTEN PERMISSION.
COPYRIGHT © 1980 DIGITAL EQUIPMENT CORPORATION"

D	IA	7018109-0-0	A

WIRE TABLE

ITEM NO.	DESRIPTION AWG	DESRIPTION COLOR	FROM CONN	FROM WITH	TO CONN	TO WITH	REMARKS
6	18	ORN	P1-1	3	P2-1	4	+12V
7	18	BLK	P1-2	3	P2-2	4	+2V RTN
8	18	RED	P1-3	3	P2-3	4	+5V
7	18	BLK	P1-4	3	P2-4	4	+5V RTN

LEGEND

NUMBER	DIM "X" VARIATION	DIM "Y" (PRECUT) REF
7018109-3B	3 FT. 2 IN. ± 1 IN.	3 FT. 3 IN. ± 1 IN.

NOTES:
1. ATTACH CABLE TIE (ITEM 5) APROXIMATELY EVERY 3 IN. AS SHOWN.
2. ALL WIRE ENDS TO BE STRIPPED.

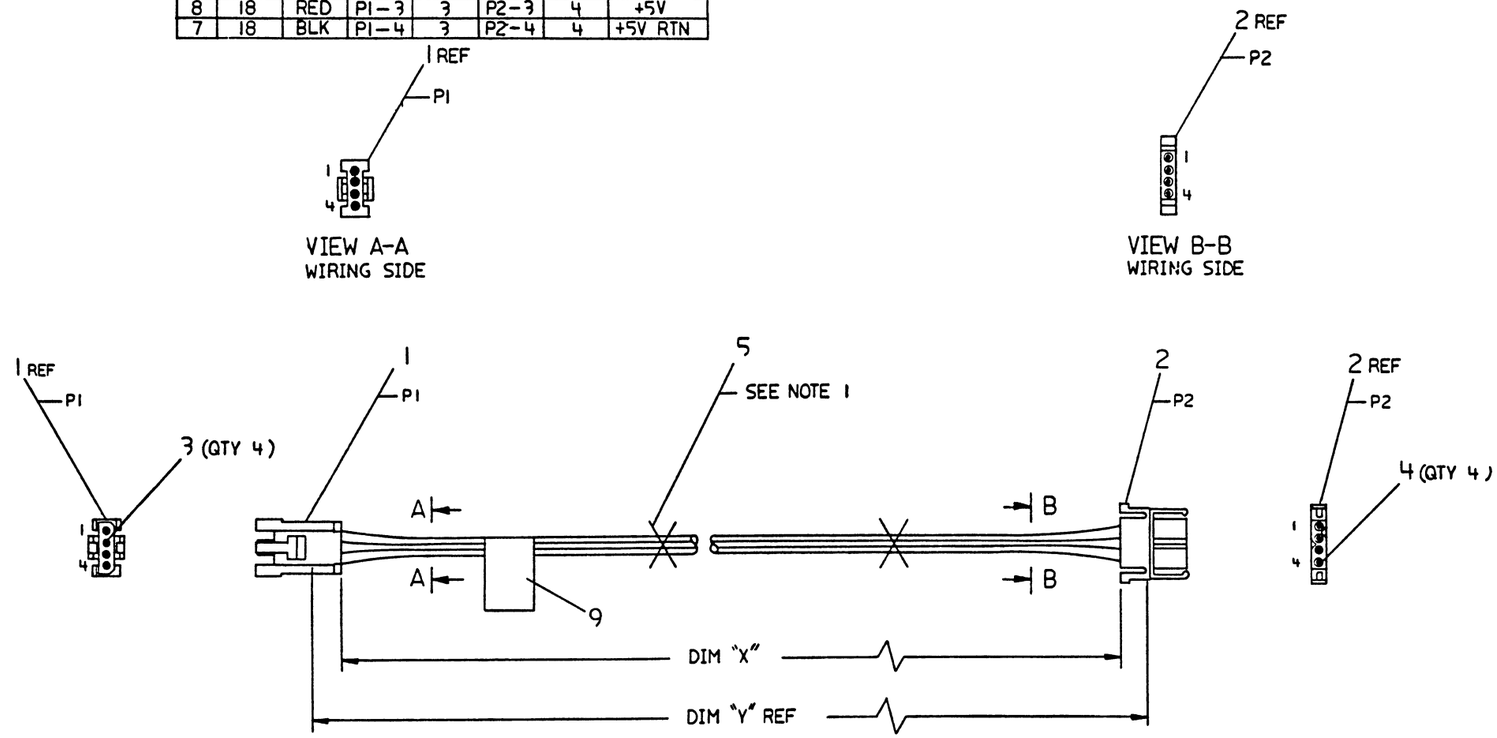

SEE OFF SHEET PARTS LIST
K-PL-7018109-0-DBP

SCALE
0 3.0 6.0
FOR MANUFACTURING PURPOSES ONLY
DO NOT REDUCE

REVISION HISTORY		
DATE	ECO NUMBER	REV
28 JULY 81	RELEASED AT REV A FROM REV X07 P. Brown	A

DESCRIPTION	DRAWING NO.	PART NO.	ITEM NO.

UNLESS OTHERWISE SPECIFIED DIMENSIONS ARE IN INCHES AND THE FOLLOWING TOLERANCES APPLY (PER DEC STD 114)

INCHES TOLERANCES: X = ± .1, .XX = ± .02, .XXX = ± .005
ANGLES ±0°30'
SURFACE QUALITY
MICROINCHES
APPLICABLE DIMENSION RANGE (CHECK ONE)
DIMENSION RANGE IN INCHES: OVER 0 TO 0.2 ± .02; OVER 0.2 TO 1.2 ± .02; OVER 1.2 TO 4.0 ± .03; OVER 4.0 TO 12.0 ± .05; OVER 12.0 TO 40.0 ± .10; OVER 40.0 TO 60.0 ± .04
QUANTITY & VARIATION

THIRD ANGLE PROJECTION
DO NOT SCALE DRAWING
REMOVE BURRS AND BREAK SHARP CORNERS
MATERIAL: SEE PARTS LIST
FINISH: NONE

		DATE
DRN	H. Vanfijn	24 JUL 80
CHKD	J.F. Sullivan	7 FEB 81
DES. ENG.	R. Pomorin	4 AUG 81
REF. ENG.	R. Pomorin	4 AUG 81
MFG. ENG.	S. Castro Cruz	13 OCT 81

NEXT HIGHER DOC. E-UA-11730-Z-0

TITLE: CABLE, TU58 POWER

DOCUMENT NUMBER: SIZE D, CODE IA, NUMBER 7018109-0-0, REV A
SCALE 1/1, SHEET 1 OF 1

TW

AUTOMATED BY PRTLST.3P(44) — P A R T S L I S T — SHEET A1 OF A1

LINE	ITEM	DOCUMENT NUMBER	PART NUMBER	DESCRIPTION	QUANTITY PER VARIATION 33
1	1		1213901-03	CONN,PLUG 4PIN	1
2	2		12198441-00	CONN 4SKT	1
3	3		12198563-00	CONN .PIN 18-16AWG	4
4	4		12198030-00	SKT 16-18AWG, REEL	4
5	5		9007031-00	TIE,CABLE BUNDL,DIA 0- 3.4"=10!	9
6	6	SEE NOTE	9107786-03	WIRE,STRND,18AWG UL1430 O	45
7	7	SEE NOTE	9107786-00	WIRE,STRND,18AWG UL1430	450
8	8	SEE NOTE	9107786-22	WIRE,STRND,18AWG UL1430 R	450
9	9		9009255-01	LABEL, POWER SUPPLY, 2-7/8" LG X	1

10 NOTE: ITEMS 6,7 AND 8 ARE IN INCHES.

REVISION HISTORY			BASIC PART NO: 7018109									
ENG	ECO NUMBER	REV	SECTION A OF A									
---	INITIAL	A	SECTION. VARIATION INDEX [A] 3B	DRN: P. TOUSIGNANT	DATE: 28-JUL-81		D	I	G	I	T	A	L
			[B]	CHK'D: A. ROCHA	DATE: 28-JUL-81	TITLE	PARTS LIST						
			[C]	DES.ENG.: R. MORIN	DATE: 28-JUL-81	TU58 POWER CABLE							
			[D]	RESP.ENG.: R. MORIN	DATE: 28-JUL-81	DOCUMENT NUMBER							
			[E]	MFG.ENG.: S. CASTIGLIONE	DATE: 28-JUL-81	SIZE	CODE	NUMBER				REV	
			[F]			K	PL	7018109-0-DBP				A	
				ASSEMBLY NUMBER: D-IA-7018109-0-0	TOP DOCUMENT NUMBER: E-UA-11730-Z-0	FILE NAME: Z1853A.PLS						EDIT # 5	

"THIS DRAWING AND SPECIFICATIONS HEREIN, ARE THE PROPERTY OF DIGITAL EQUIPMENT CORPORATION AND SHALL NOT BE REPRODUCED OR COPIED OR USED IN WHOLE OR IN PART AS THE BASIS FOR THE MANUFACTURE OR SALE OF ITEMS WITHOUT WRITTEN PERMISSION.
COPYRIGHT (C) 1981. DIGITAL EQUIPMENT CORPORATION "

"THIS DRAWING AND SPECIFICATIONS, HEREIN, ARE THE PROPERTY OF DIGITAL EQUIPMENT CORPORATION AND SHALL NOT BE REPRODUCED OR COPIED OR USED IN WHOLE OR IN PART AS THE BASIS FOR THE MANUFACTURE OR SALE OF ITEMS WITHOUT WRITTEN PERMISSION.
COPYRIGHT © 1981 DIGITAL EQUIPMENT CORPORATION"

SIZE C CODE IA NUMBER 7018720-0-0 REV. A

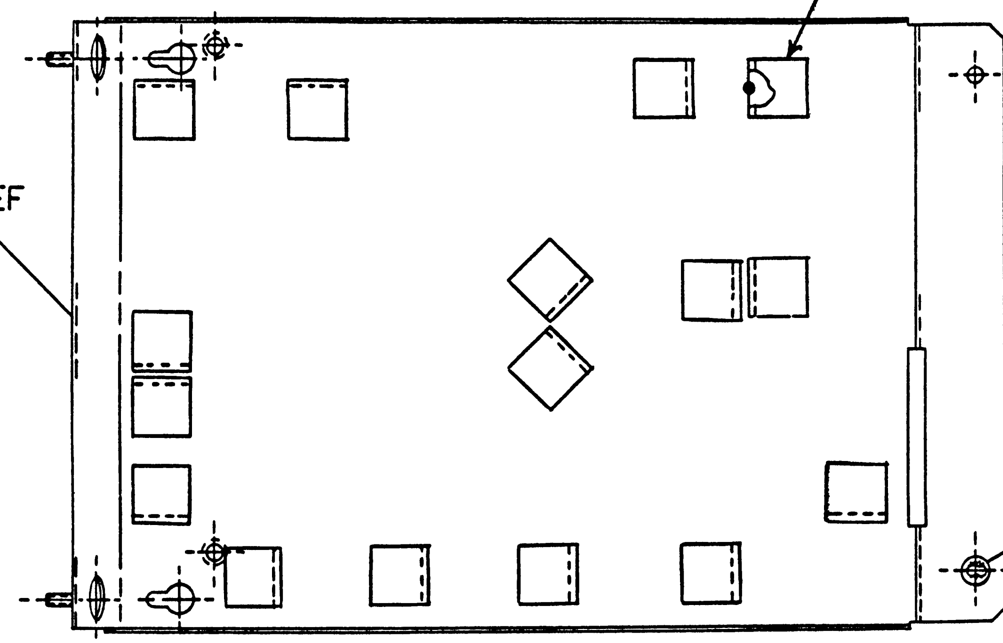

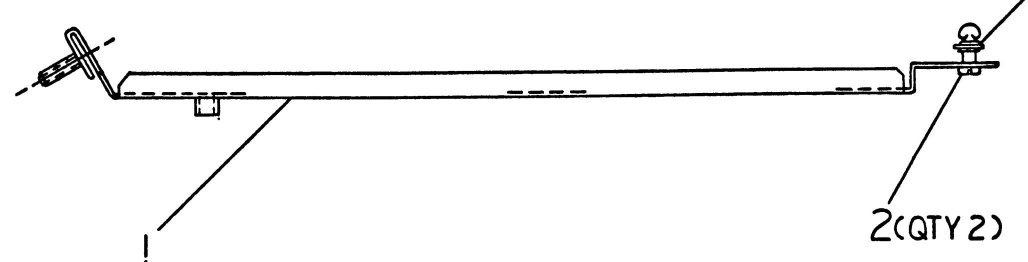

NOTES:

1. TO INSTALL RETAINER RING USE VENDOR INSTALLATION TOOL NUMBER 82-0-14719-11(SOUTHCO).
2. APPLY CABLE CLAMPS TO EMBOSSED SQUARES AS SHOWN. DOT ON METAL INDICATES CLOSED END OF CLAMP.

CAUTION: OFF SHEETS PARTS LIST REFER TO K-PL-7018720-0-DBP

REVISION HISTORY		
DATE	ECO NUMBER	REV.
13 Jul 81	Rev X99 [illegible]	X9Ø
4 Aug 81	REL'D AT REV A [illegible]	

DRC 1000

DESCRIPTION	DRAWING NO.	PART NO.	ITEM NO

UNLESS OTHERWISE SPECIFIED DIMENSIONS ARE IN INCHES AND THE FOLLOWING TOLERANCES APPLY (PER DEC STD 114)

INCHES TOLERANCES	ANGLES ± 0° 30'	APPLICABLE DIMENSION RANGE (CHECK ONE)	OVER 0 TO 0.2	OVER 0.2 TO 1.2	OVER 1.2 TO 4.0	OVER 4.0 TO 12.0	OVER 12.0 TO 40.0	OVER 40.0 TO 80.0
.X = ± .1	SURFACE QUALITY	☐	± .02		± .03	± .06	± .10	
.XX = ± .02		☐	± .004	± .008	± .012	± .016	± .024	± .04
.XXX = ± .005	MICROINCHES	☐						

QUANTITY & VARIATION

THIRD ANGLE PROJECTION

DO NOT SCALE DRAWING

REMOVE BURRS AND BREAK SHARP CORNERS

MATERIAL: SEE PARTS LIST

FINISH: —

		DATE
DRN.	A. Roche	13 July 81
CHK'D	R. Morin	7-14-81
DES. ENG	R. Morin	4 AUG 81
RESP. ENG	R. Morin	4 AUG 81
MFG. ENG	SD Casty	30 NOV 81

NEXT HIGHER DOC. E-UA-11730-Z-0

TITLE: CATCH PAN ASSY

digital

DOCUMENT NUMBER

SIZE	CODE	NUMBER	REV
C	IA	7018720-0-0	A

SCALE 1/2 SHEET 1 OF 1

TW 1

AUTOMATED BY PRTLST.3P(44) P A R T S L I S T SHEET A1 OF A1

LINE	ITEM	DOCUMENT NUMBER	PART NUMBER	DESCRIPTION	QUANTITY PER VARIATION 00
1	1	E-IA-7425728-0-0	7425728-00	PAN,CATCH	1
2	2		9010308-00	RETAINER,PUSH-ON SS/PAS	2
3	3		9000026-05	FASTNR, 1/4 TURN,WING HD	2
4	4		9009636-00	CLAMP, CABLE, FOR FLAT CABLE	16

REVISION HISTORY			BASIC PART NO: 7018720	DRN: P. TOUSIGNANT	DATE: 30-JUL-81		D	I	G	I	T	A	L
ENG	ECO NUMBER	REV	SECTION A OF A										
---	INITIAL	A	SECTION. VARIATION INDEX	CHK'D: A. ROCHA	DATE: 30-JUL-81	TITLE	PARTS LIST						
			[A] 00			CATCH PAN ASSY							
			[B]	DES.ENG.: R. MORIN	DATE: 30-JUL-81								
			[C]			DOCUMENT NUMBER							
			[D]	RESP.ENG.: R. MORIN	DATE: 30-JUL-81	SIZE	CODE	NUMBER				REV	
			[E]	MFG.ENG.: S. CASTIGLIONE	DATE: 30-JUL-81	K	PL	7018720-0-DBP				A	
			[F]	ASSEMBLY NUMBER: C-IA-7018720-0-0	TOP DOCUMENT NUMBER: E-UA-11730-Z-0			FILE NAME: Z2835A.PLS				EDIT # 6	

"THIS DRAWING AND SPECIFICATIONS HEREIN, ARE THE PROPERTY OF DIGITAL EQUIPMENT CORPORATION AND SHALL NOT BE REPRODUCED OR COPIED OR USED IN WHOLE OR IN PART AS THE BASIS FOR THE MANUFACTURE OR SALE OF ITEMS WITHOUT WRITTEN PERMISSION.
COPYRIGHT (C) 1981. DIGITAL EQUIPMENT CORPORATION "

"THIS DRAWING AND SPECIFICATIONS, HEREIN ARE THE PROPERTY OF DIGITAL EQUIPMENT CORPORATION AND SHALL NOT BE REPRODUCED OR COPIED OR USED IN WHOLE OR IN PART AS THE BASIS FOR THE MANUFACTURE OR SALE OF ITEMS WITHOUT WRITTEN PERMISSION
COPYRIGHT © 1982 DIGITAL EQUIPMENT CORPORATION"

NOTES:

1. SCREWLOCK ASSY IS A KIT BAG PER CONNECTOR. DISCARD FOUR FLAT WASHERS AND TWO NUTS PER CONNECTOR ASSY.
2. RECTANGULAR SLOTS ARE PROVIDED SO THAT PRESSURE CAN BE EXERTED TO FIRMLY SEAT THE TWO UNIBUS PLATES FOR METAL CONTACT BY USING FLAT SCREWDRIVER BLADE OR EQUIVALENT.

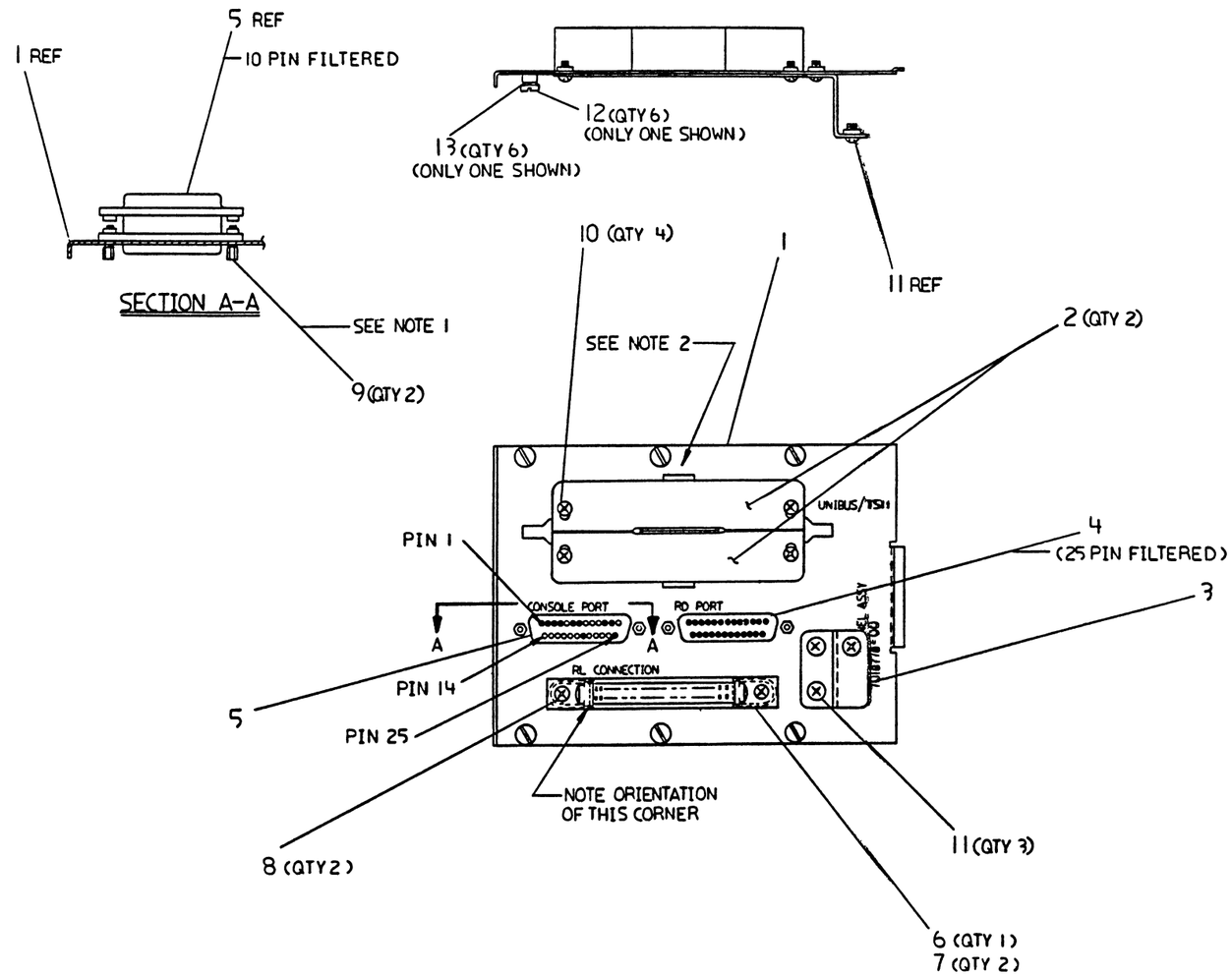

CAUTION: SEE OFF SHEET PARTS LIST
K-PL-7018778-0-DBP.(Z3616A)

DESCRIPTION	DRAWING NO.	PART NO.	ITEM NO.

UNLESS OTHERWISE SPECIFIED DIMENSIONS ARE IN INCHES AND THE FOLLOWING TOLERANCES APPLY (PER DEC STD 114)

INCHES TOLERANCES	ANGLES ±0° 30'	APPLICABLE DIMENSION RANGE (CHECK ONE)	DIMENSION RANGE IN INCHES: OVER 0 TO 0.2	OVER 0.2 TO 1.2	OVER 1.2 TO 4.0	OVER 4.0 TO 12.0	OVER 12.0 TO 40.0	OVER 40.0 TO 80.0
.X = ± .1	SURFACE QUALITY		± .02		± .03	± .05	± .10	
.XX = ± .02			± .004	± .008	± .012	± .016	± .024	± .04
.XXX = ± .005								

QUANTITY & VARIATION

THIRD ANGLE PROJECTION

DO NOT SCALE DRAWING

REMOVE BURRS AND BREAK SHARP CORNERS

MATERIAL: SEE PARTS LIST

FINISH

DRN	Paul Tousignant	DATE 15 JAN 82
CHKD	R Simon	DATE 2 FEB 82
DES ENG	R Simon	DATE 2 FEB 82
REQ ENG	R Simon	DATE 2 FEB 82
MFG ENG	S.A. Castiglione	DATE 25 FEB 82

NEXT HIGHER DOC: E-AD-7018779-0-0

TITLE: CPU-I/O PANEL ASSY

digital

DOCUMENT NUMBER

SIZE	CODE	NUMBER	REV.
D	AD	7018778-0-0	A

SCALE — SHEET — OF

REVISION HISTORY

DATE	ECO NUMBER	REV
25 Feb 82	Released at Rev A Rec Eng P. Tousignant	A

DRD 1000

TW

AUTOMATED BY PRTLST.3P(44) P A R T S L I S T SHEET A1 OF A1

LINE	ITEM	DOCUMENT NUMBER	PART NUMBER	DESCRIPTION	QUANTITY PER VARIATION 00
1	1	D-IA-7426405-04-DBU	7426405-04	PANEL,SEXTAL	1
2	2	B-IA-7018781-0-0	7018781-00	BRKT. ASSY, UNIBUS FILLER	2
3	3	C-IA-7426654-0-0	7426654-01	BRACKET,CABLE GROUND	1
4	4	A-PS-1217431-0-0	1217431-00	CONN,D SUB 25POS ASSY STRAIGHT W	1
5	5	A-PS-1217431-0-0	1217431-02	CONN,D SUB 10POS ASSY STRAIGHT W	1
6	6	A-PS-1211591-0-0	1211591-35	CONN,ZIF 40PIN RCPT ASSY	1
7	7	A-PS-1211591-0-0	1211591-38	CONN,ZIF 40PIN RCPT,SWAP IN GU	2
8	8		9006010-01	SCREW,PAN,PHIL 4-40X 5/16 SS	2
9	9		9008451-00	SCREW LOCK-ASSY	2
10	10		9009546-00	SCREW,PAN,PHIL,SEMS 4-40X .375L	4
11	11		9010174-00	SCREW,PAN,PHIL,SEMS 6-32X .25 L	3
12	12	A-PS-1219534-0-0	1219534-01	SCREW,CAPTIVE,SLTD HD 4-40X.60LG	6
13	13		9006688-00	WASHER, LOCK, S.S. #4	6

REVISION HISTORY		
ENG	ECO NUMBER	REV
---	INITIAL	A

BASIC PART NO: 7018778
SECTION A OF A
SECTION. VARIATION INDEX
[A] 00
[B]
[C]
[D]
[E]
[F]

DRN: P. TOUSIGNANT — DATE: 27-JAN-82
CHK'D: R. MORIN — DATE: 27-JAN-82
DES.ENG.: R. MORIN — DATE: 27-JAN-82
RESP.ENG.: R. MORIN — DATE: 27-JAN-82
MFG.ENG.: S. CASTIGLIONE — DATE: 27-JAN-82

ASSEMBLY NUMBER: D-AD-7018778-0-0
TOP DOCUMENT NUMBER: E-AD-7018779-0-0

D	I	G	I	T	A	L

TITLE: PARTS LIST
CPU-I/O PANEL ASSY

DOCUMENT NUMBER

SIZE	CODE	NUMBER	REV
K	PL	7018778-0-DBP	A

FILE NAME: Z3616A.PLS
EDIT #: 8

"THIS DRAWING AND SPECIFICATIONS HEREIN, ARE THE PROPERTY OF DIGITAL EQUIPMENT CORPORATION AND SHALL NOT BE REPRODUCED OR COPIED OR USED IN WHOLE OR IN PART AS THE BASIS FOR THE MANUFACTURE OR SALE OF ITEMS WITHOUT WRITTEN PERMISSION.
COPYRIGHT (C) 1982, DIGITAL EQUIPMENT CORPORATION "

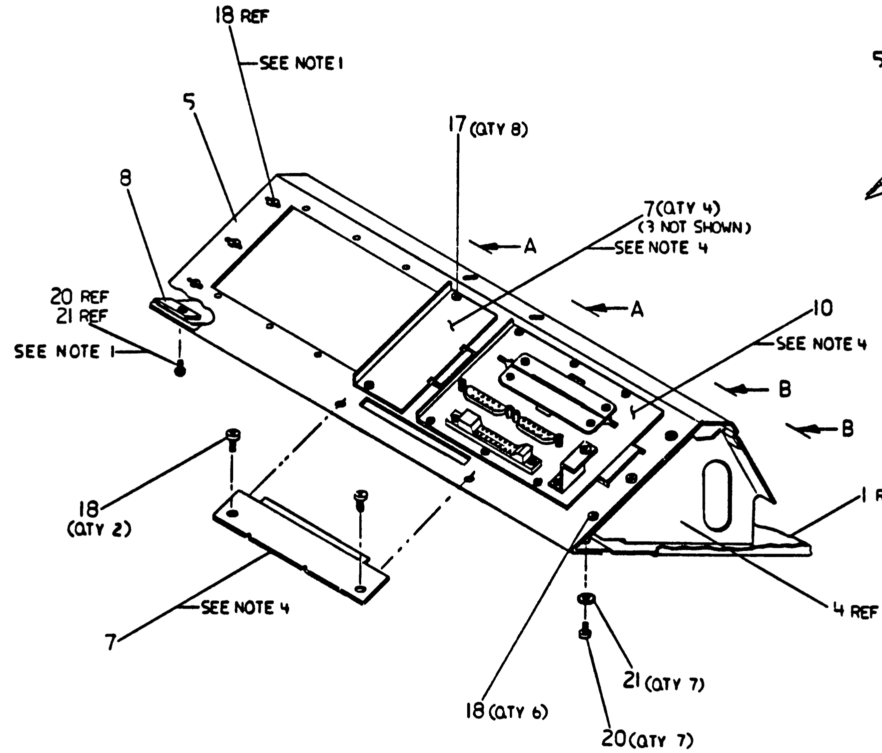

REAR VIEW

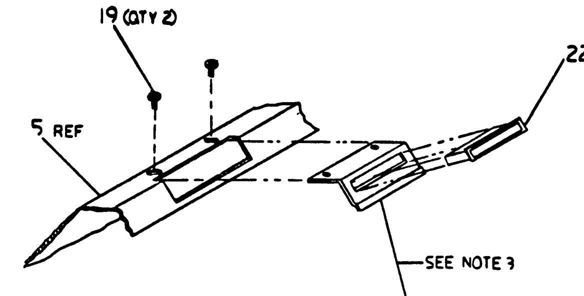

VIEW A A
ROTATED 180°

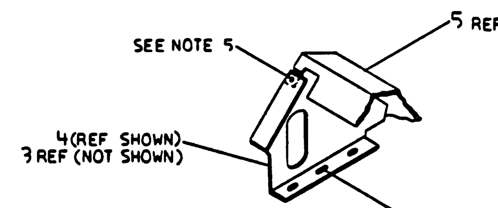

VIEW B-B
ROTATED 180°

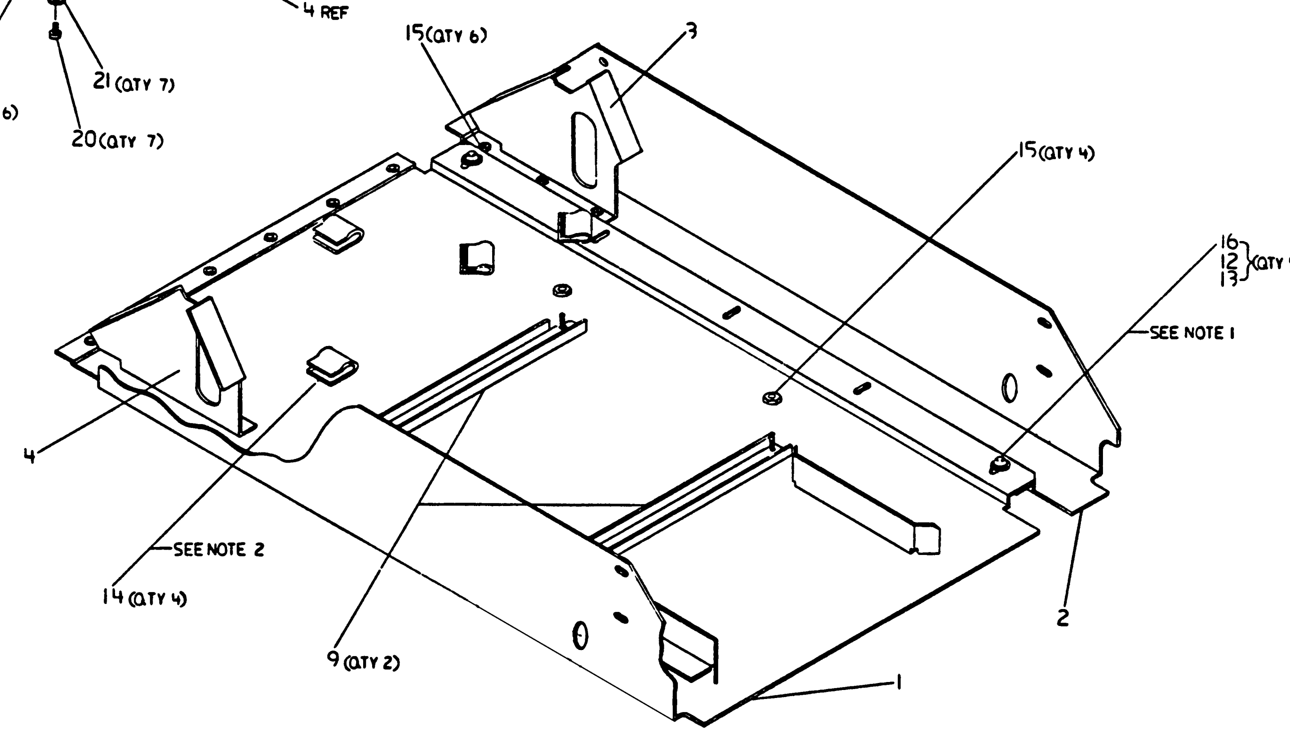

FRONT VIEW
WITHOUT I/O—PORT PANEL

NOTES:

1. IN THREE PLACES, AS SHOWN, THE HARDWARE SHOULD BE MOUNTED LOOSELY. TO COLLAPSE TRAY SECTIONS FOR SHIPPING AND READY TO EXPAND FOR CABINET INSTALLATION.
2. APPLY CABLE CLAMPS (ITEM 14) TO EMBOSSED SQUARES IN METAL AS SHOWN. DOT ON METAL INDICATES CLOSED END OF CLAMPS.
3. MAGNET BRACKET (ITEM 6) SHOULD BE INSTALLED IN ITS INNERMOST ADJUSTABLE POSITION. THIS BRACKET MUST BE POSITIONED AT CPU INSTALLATION LEVEL.
4. ITEMS 7, 10 & 16 MUST BE LOCATED AT A RIGHT ANGLE (90°) TO ITS MOUNTING SURFACE AND LOWERED FLAT INTO POSITION. METAL INTERFERENCE IS BUILT IN TO REDUCE RFI EMISSION.
5. TWO OUTERMOST TABS ON ITEM 5 MUST MAKE CONTACT WITH ITEM 3 & 4. MYLAR OR SHIM STOCK TRIAL REQ'D
6. SLOTTED HOLES IN THE BRACKET ARE TO BE CENTERED ON STUDS ON BOTH TRAYS AT ASSY. ADJUSTMENT PROVIDED IN CASE REQUIRED.

CAUTION: SEE OFF SHEET PARTS LIST K-PL-7018779-0-DBP (Z3612A)

COPYRIGHT © 1982 DIGITAL EQUIPMENT CORPORATION

TITLE	CPU CABLE RETRACTOR ASSY
DOCUMENT NUMBER	E AD 7018779-0-0
REV	A
NEXT HIGHER ASSY	E-UA-11/730-Z-0
SCALE	1/2

THIRD ANGLE PROJECTION
DO NOT SCALE DRAWING
REMOVE BURRS AND BREAK SHARP CORNERS

digital

E AD 7018779-0-0 A

AUTOMATED BY PRTLSST.3P(44) — P A R T S L I S T — SHEET A1 OF A1

LINE	ITEM	DOCUMENT NUMBER	PART NUMBER	DESCRIPTION	QUANTITY PER VARIATION 00
1	1	D-IA-7018549-0-0	7018549-00	RETRACTOR TRAY RIVETED	1
2	2	E-IA-7425733-0-0	7425733-00	TRAY,R.H. HALF	1
3	3	E-IA-7426619-0-0	7426619-01	I/O PANEL BRKT.(RIGHT)	1
4	4	E-IA-7426619-0-0	7426619-02	I/O PANEL BRKT.(LEFT)	1
5	5	E-IA-7426618-0-0	7426618-01	I/O PORT PANEL	1
6	6	C-IA-7426620-0-0	7426620-01	BRACKET,MAGNETIC	1
7	7	C-MD-7426621-0-0	7426621-01	COVER,PLATE-R80 HOLE	1
8	8	B-IA-7426652-0-0	7426652-01	NUT PLATE	1
9	9	C-IA-7018772-0-0	7018772-00	CLAMP ASSY	2
10	10	D-AD-7018778-0-0	7018778-00	CPU-1I/O PANEL ASSY	1
11	11	D-MD-7426407-01-DBU	7426407-01	PANEL,SUB,DOUBLE	4
12	12		9006664-00	WASHER, FLAT, .437 OD X .218 ID	5
13	13		9007651-00	WASHER, LOCK, EXTERNAL TOOTH #10	5
14	14		9009636-00	CLAMP, CABLE, FOR FLAT CABLE	4
15	15		9006563-00	NUT,KEP 8-32X 11/13AF	10
16	16		9006071-03	SCREW,TRUS,PHIL, 10-32X 3/8	5
17	17		9009546-00	SCREW,PAN,PHIL,SEMS 4-40X .375L	8
18	18		9010174-00	SCREW,PAN,PHIL,SEMS 6-32X .25 L	8
19	19		9010174-01	SCREW,PAN,PHIL,SEMS 8-32X .31 L	2
20	20		9006037-03	SCREW,TRUS,PHIL, 8-32X 3/8	7
21	21		9008151-00	WASHER, LOCK, EXT. TOOTH #8	7
22	22	A-PS-1212908-0-0	1212908-01	DOOR CATCH,MAGNETIC,SNAP-IN RELEASABLE	1

REVISION HISTORY

ENG	ECO NUMBER	REV
	INITIAL	A

BASIC PART NO: 7018779

SECTION A OF A

SECTION. VARIATION INDEX
[A] 00
[B]
[C]
[D]
[E]
[F]

DRN: R.J. RILEY — DATE: 27-JAN-82
CHK'D: R.J. RILEY — DATE: 27-JAN-82
DES.ENG.: R. MORIN — DATE: 27-JAN-82
RESP.ENG.: R. MORIN — DATE: 27-JAN-82
MFG.ENG.: S. CASTIGLIONE — DATE: 27-JAN-82

ASSEMBLY NUMBER: E-AD-7018779-0-0
TOP DOCUMENT NUMBER: E-UA-11730-Z-0

D I G I T A L

TITLE: PARTS LIST
CPU CABLE RETRACTOR ASSY

DOCUMENT NUMBER

SIZE	CODE	NUMBER	REV
K	PL	7018779-0-DBP	A

FILE NAME: Z3612A.PLS
EDIT. #: 3

"THIS DRAWING AND SPECIFICATIONS HEREIN, ARE THE PROPERTY OF DIGITAL EQUIPMENT CORPORATION AND SHALL NOT BE REPRODUCED OR COPIED OR USED IN WHOLE OR IN PART AS THE BASIS FOR THE MANUFACTURE OR SALE OF ITEMS WITHOUT WRITTEN PERMISSION.
COPYRIGHT (C) 1982. DIGITAL EQUIPMENT CORPORATION "

The drawing and specifications, herein, are the property of Digital Equipment Corporation and shall not be reproduced or copied or used in whole or in part as the basis for the manufacture or sale of items without written permission

DIGITAL EQUIPMENT CORPORATION
MAYNARD MASSACHUSETTS

PACKAGING INSTRUCTION	REV:	DATE:
TITLE PKG CPU 11730-ZA		

LEGEND

VARIATION	USED ON	PACKAGE TYPE	REMARKS
3700662-01	11730-ZA		

PARTS LIST 3700662-01

REFER TO OFF-SHEET PARTS LIST K-PL-3700662-0-D8P

PACKAGING INSTRUCTIONS 3700662-01

STEP PROCEDURE FIGURE 1 AND 2

1. CUT TWO (2) PIECES OF POLYESTER STRAPPING (9905734-02) SEVEN (7) FEET LONG AND LAY FLAT ON THE PALLET (9906199-00).

2. SET UP ONE (1) END OF THE DIE CUT TRAY (9906832-01) AND PLACE ON THE TWO (2) STRAPS.

3. SET UP THE DIE CUT SHEET (9906933-01).

4. PLACE RETRACTOR TRAY (7018779-00) ON DIE CUT SHEET SO THAT THE ANGLED CABLE CONNECTOR RESTS AGAINST THE CORRUGATED SQUARE.

5. WRAP THE SHEET AROUND THE RETRACTOR TRAY.

6. PLACE THE WRAPPED RETRACTOR TRAY INTO THE DIE CUT TRAY SO THAT THE CORRUGATED SQUARE ON THE SHEET RESTS AGAINST THE SET UP END OF THE DIE CUT TRAY.

7. TAPE ONE (1) PRESSURE SHEET ASSY (7018718-00) TO THE TOP OF THE CPU BOX USING FIFTEEN (15) INCHES OF GLASS FILAMENT TAPE (9009634-00).

8. PLACE A POLYETHYLENE BAG (9905128-23) OVER THE CPU UNIT ASSEMBLY.

9. PLACE THE CPU BOX INTO THE WRAPPED RETRACTOR TRAY SO THAT THE BEZEL OF THE CPU UNIT ASSEMBLY IS FACING THE OPEN END OF THE DIE CUT TRAY.

10. FOLD OVER THE OPEN END OF THE DIE CUT TRAY.

SHEET 4 & 5 "C" SIZE

ENG	APPD	SIZE	CODE	NUMBER	REV
6-2-82	4/22/82	A	PA	3700662-0-0	A

EN 01189 16 REVB(33L)

SHEET 1 OF 5

PACKAGING INSTRUCTION CONTINUATION SHEET

TITLE
PKG CPU 11730-ZA

11. PLACE ONE (1) HALF SLOTTED CARTON (9906930-01) OVER THE CPU UNIT ASSEMBLY AND INTO THE DIE CUT TRAY. LEAVE THE TOP FLAPS OPEN.

12. PLACE EACH OF THE FOLLOWING ITEMS IN, THE QUANTITY SPECIFIED, INTO A PLASTIC BAG (9906557-14) AND PLACE THEM ON THE FOURTH PANEL OF THE FIVE PANEL FOLDER (9906786-00):

ITEM	DESCRIPTION	PART NUMBER	QUANTITY
A	GUIDE AND CLAMP	7425927-00	1
B	SHIPPING BRACKET	7413659-00	1
C	BRACKET, CARRIER/BOX	7425928-00	1
D	BRACKET, CAB/CARRIER	7425929-00	1
E	CABLE, FERRULED	1215700-04	1
F	CABLE CARRIER	121902-00	1
G	CLAMP, R80 CABLE	7426623-01	1
H	CLAMP, DMF CABLE	7426625-01	1
I	BAR CLAMP ASSY	7426723-01	1
J	STUD PLATE	7426335-01	4
K	SLIDE MTG BRKT, LEFT	7425734-00	2
L	SLIDE MTG BRKT, RIGHT	7425734-01	2

		SIZE	CODE	NUMBER	REV
		A	PA	3700662-0-0	A

EN 01190 16 REVA(33L)

SHEET 2 OF 5

PACKAGING INSTRUCTION CONTINUATION SHEET

TITLE
PKG CPU 11730-ZA

13. CLOSE AND SEAL THE FIVE PANEL FOLDER USING TWENTY-FOUR (24) INCHES OF CARTON SEALING TAPE (9905729-00).

14. PLACE THE SEALED FIVE PANEL FOLDER INTO THE HALF SLOTTED CARTON IN FRONT OF THE CPU BEZEL.
CPU 11730-ZA

15. PLACE ONE (1) TU58-K MEDIA CARTRIDGE (3615809-00) INTO A BUBBLELITE ENVELOPE (9905012-05) AND PLACE ON TOP OF THE FIVE PANEL FOLDER.

16. PLACE ONE (1) AC LINE CORD (1700083-21) AND ONE (1) AC LINE CORD 1700083-22) INTO THE HALF SLOTTED CARTON ON TOP OF THE FIVE PANEL FOLDER.

17. PLACE A HARDWARE KIT BAG (B-PL-11730-Z-5) INTO THE HALF SLOTTED CARTON ON TOP OF THE AC LINE CORDS.

18. PLACE TWO (2) SLIDES (1218166-00) AND HARDWARE KIT BAGS, ONE (1) ON EACH SIDE OF THE CPU UNIT ASSEMBLY BETWEEN THE INSIDE OF THE HALF SLOTTED CARTON AND THE WRAPPED RETRACTOR TRAY AS SHOWN IN FIGURE 1.

19. CLOSE THE FLAPS OT THE HALF SLOTTED CARTON.

20. SEAL THE CARTON BY CLAMPING THE TWO (2) STRAPS AROUND THE CARTON.

21. PALLETIZE PER FIGURE 2 USING FOUR (4) ANGLEBOARD (9906185-05) AND FOUR (4) PIECES OF STRAPPING (9905734-02).

		SIZE	CODE	NUMBER	REV
		A	PA	3700662-0-0	A

EN 01190 16 REVA(33L)

SHEET 3 OF 5

"THIS DRAWING AND SPECIFICATIONS, HEREIN, ARE THE PROPERTY OF DIGITAL EQUIPMENT CORPORATION AND SHALL NOT BE REPRODUCED OR COPIED OR USED IN WHOLE OR IN PART AS THE BASIS FOR THE MANUFACTURE OR SALE OF ITEMS WITHOUT WRITTEN PERMISSION.
COPYRIGHT © 1982 DIGITAL EQUIPMENT CORPORATION"

PACKAGE DIMENSIONS, WEIGHTS & PLASTIC PACKING MATERIAL

	USA	METRIC
WEIGHT	98.00 LBS.	44.45 KG.
LENGTH	42.00 IN.	1066 MM
WIDTH	22.00 IN.	558 MM
HEIGHT	12.50 IN.	317 MM
CUBE	6.68 CU.FT.	0.19 CU.M.
DENSITY	14.67 LBS/CU.FT.	235.0 KG./CU.M
* PLASTIC	— %V O L. — %W T.	— TYPE

* % VOLUME EXPANDED
% WEIGHT UNEXPANDED

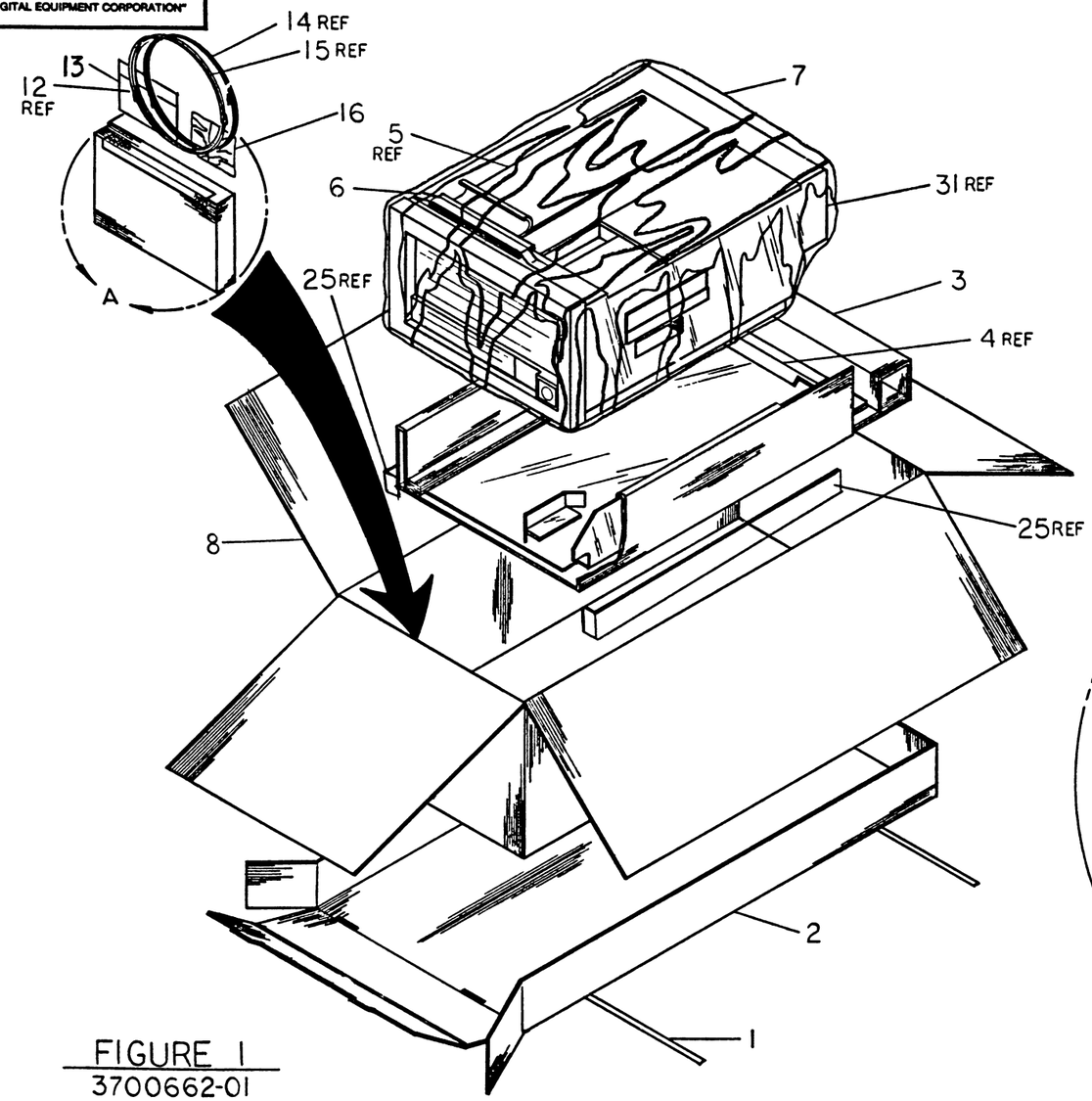

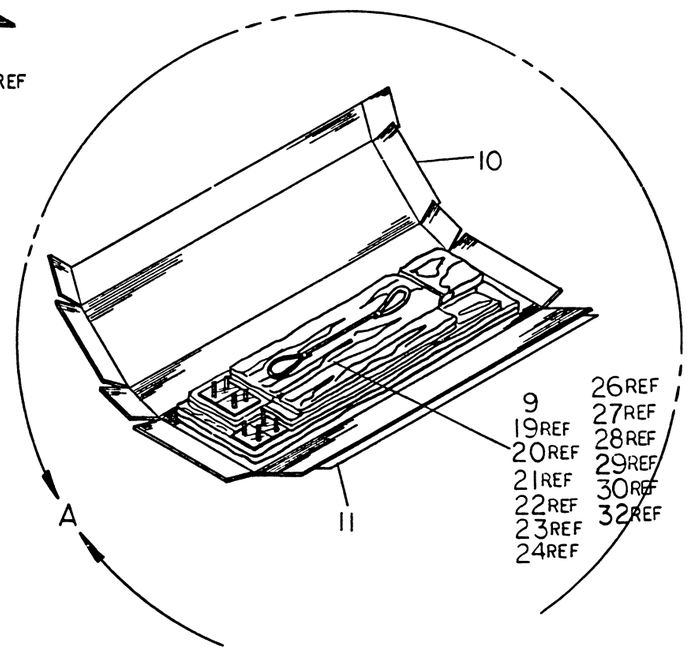

FIGURE 1
3700662-01

FOR OFF SHEET PARTS LIST SEE K-PL-3700662-0-DBP

DRN. G. GYORKE	DATE 6/82	TITLE PKG	digital
CHK'D. J. Barrett	DATE 6/24/82	CPU 11730-ZA	
DES ENG. G. Larsen	DATE 6/82		
RESP ENG. G. Larsen	DATE 6/82	DOCUMENT NUMBER	
MFG. ENG. NONE	DATE —	SIZE C / CODE PA / NUMBER 3700662-0-0 / REV A	
NEXT HIGHER DOC		SCALE 1/4	SHEET 4 OF 5

REVISION HISTORY

REV.	ECO NUMBER	DATE

SIZE C PA 3700662-0-0 REV A

DRC 1118

"THIS DRAWING AND SPECIFICATIONS, HEREIN, ARE THE PROPERTY OF DIGITAL EQUIPMENT CORPORATION AND SHALL NOT BE REPRODUCED OR COPIED OR USED IN WHOLE OR IN PART AS THE BASIS FOR THE MANUFACTURE OR SALE OF ITEMS WITHOUT WRITTEN PERMISSION.
COPYRIGHT ©
DIGITAL EQUIPMENT CORPORATION"

SIZE C | CODE PA | NUMBER 3700662-0-0 | REV. A

PACKAGE DIMENSIONS WEIGHTS
& PLASTIC PACKING MATERIAL

	USA	METRIC
WEIGHT	638.00 LBS.	289.39 KG.
LENGTH	48.00 IN.	1219 MM
WIDTH	42.00 IN.	1066 MM
HEIGHT	42.50 IN.	1079 MM
CUBE	49.58 CU.FT.	1.40 CU.M
DENSITY	12.87 LBS/CU.FT.	206.1 KG/CU.M
*PLASTIC	— % VOL. — % WT.	— TYPE

* % VOLUME (EXPANDED)
% WEIGHT (UNEXPANDED)

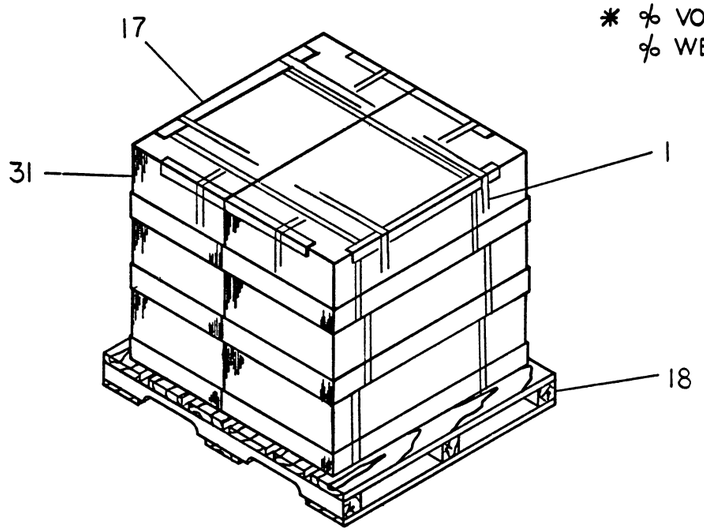

FIGURE 2
3700662-01

FOR OFF SHEET PARTS LIST SEE K-PL-3700662-0-DBP

DRN.	DATE
CHK'D	DATE
DES ENG.	DATE
RESP ENG.	DATE
MFG ENG.	DATE
NEXT HIGHER DOC.	

TITLE PKG digital
CPU 11730-ZA

DOCUMENT NUMBER
SIZE C | CODE PA | NUMBER 3700662-0-0 | REV A
SCALE | SHEET 5 OF 5

REVISION HISTORY
REV. | ECO NUMBER | DATE

DRC 1118

SIZE C | CODE PA | NUMBER 3700662-0-0 | REV. A

"THE MATERIAL HEREIN IS FOR INFORMATION PURPOSES ONLY AND IS SUBJECT TO CHANGE WITHOUT NOTICE. DIGITAL EQUIPMENT CORPORATION ASSUMES NO RESPONSIBILITY FOR ANY ERRORS WHICH MAY APPEAR HEREIN."

DRAWING DIRECTORY

"THIS DRAWING AND SPECIFICATIONS, HEREIN, ARE THE PROPERTY OF DIGITAL EQUIPMENT CORPORATION AND SHALL NOT BE REPRODUCED OR COPIED OR USED IN WHOLE OR IN PART AS THE BASIS FOR THE MANUFACTURE OR SALE OF ITEMS WITHOUT WRITTEN PERMISSION. COPYRIGHT © DIGITAL EQUIPMENT CORPORATION.

UNIT VARIATIONS

VAR	TITLE
KA730-A	11730 PROCESSOR MODULE SET

REVISIONS

REV.	CHANGE NO.	CHK

USED ON OPTION/MODEL

11730

SHEET 1 OF 3

DRN.	D. LANDRY	DATE	2-2-82
CHK'D.	D.M. Landry	DATE	25-FEB-82
PROJ. ENG.	D.M. Landry	DATE	25-FEB-82
PROD.	S.A. Cadolph	DATE	25FEB82

TITLE

digital

11730 PROCESSOR MODULE SET

SIZE	CODE	NUMBER	REV
B	DD	KA730-A	A

DIST.

DRB 106A

TW

"THIS DRAWING AND SPECIFICATIONS, HEREIN, ARE THE PROPERTY OF DIGITAL EQUIPMENT CORPORATION AND SHALL NOT BE REPRODUCED OR COPIED OR USED IN WHOLE OR IN PART AS THE BASIS FOR THE MANUFACTURE OR SALE OF ITEMS WITHOUT WRITTEN PERMISSION.
COPYRIGHT © DIGITAL EQUIPMENT CORPORATION"

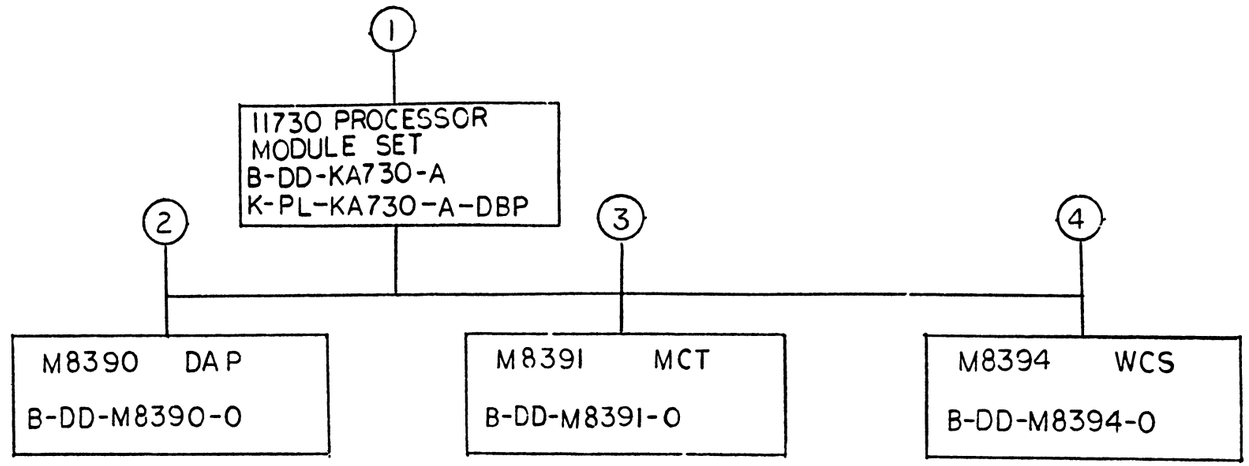

TITLE		SIZE	CODE	NUMBER	REV
11730 PROCESSOR MODULE SET	SHEET 2 OF 3	B	DD	KA730-A	A

TW

FIND NO.	DRAWING NO.	DESCRIPTION	TYPE
	B-DD-KA730-A	11730 MODULE SET-DWG DIRECTORY	—
	K-PL-KA730-A-DBP	11730 MODULE SET-PARTS LIST	—
2	B-DD-M8390-0	M8390 DAP MODULE-DWG DIRECTORY	—
	D-UA-M8390-0-0	DAP UNIT ASSEMBLY	E/M
	K-PL-M8390-0-DBP	DAP PARTS LIST	—
	D-BD-M8390-0-0	DAP BLOCK DIAGRAM	E
	D-CS-M8390-0-X	DAP CIRCUIT SCHEMATICS	E
		(D-CS-M8390-0-DAPA THRU -DAPM)	
	D-GL-M8390-0-0	DAP ROM AND PAL LISTINGS	—
3	B-DD-M8391-0	M8391 MCT MODULE-DWG DIRECTORY	—
	D-UA-M8391-0-0	MCT UNIT ASSEMBLY	E/M
	K-PL-M8391-0-DBP	MCT PARTS LIST	—
	D-BD-M8391-0-0	MCT BLOCK DIAGRAM	E
	D-CS-M8391-0-X	MCT CIRCUIT SCHEMATICS	E
		(D-CS-M8391-0-MCTA THRU -MCTN)	
	D-GL-M8391-0-1	MCT ROM AND PAL LISTINGS	—
	D-FD-M8391-0-X	MCT FLOW DIAGRAMS	—
		(D-FD-M8391-0-1 THRU -2!)	—
4	B-DD-M8394-0	M8394 WCS MODULE-DWG DIRECTORY	—
	D-UA-M8394-0-0	WCS UNIT ASSEMBLY	E/M
	K-PL-M8394-0-DBP	WCS PARTS LIST	—
	D-BD-M8394-0-0	WCS BLOCK DIAGRAM	—
	D-CS-M8394-0-X	WCS CIRCUIT SCHEMATICS	E
		(D-CS-M8394-0-WCSA THRU -WCSR)	
	D-GL-M8394-0-1	WCS ROM AND PAL LISTINGS	—

FIND NO.	DRAWING NO.	DESCRIPTION	TYPE

TYPE: E ELECTRICAL
M MECHANICAL
E/M ELECTRO/MECHANICAL

digital

TITLE 11730 PROCESSOR MODULE SET | SHEET 3 OF 3 | SIZE B | CODE DD | NUMBER KA730-A | REV A

DRB 108A

TW

AUTOMATED BY PRTLST.3P(44) P A R T S L I S T SHEET A1 OF A1

LINE	ITEM	DOCUMENT NUMBER	PART NUMBER	DESCRIPTION	QUANTITY PER VARIATION A
1	1	B-DD-M8390-0	M8390-00	DAP (DATA PATH)	1
2	2	B-DD-M8391-0	M8391-00	MCT (MEMORY CONTROLLER) HEX	1
3	3	B-DD-M8394-0	M8394-00	WRITEABLE CONTROL STORE,HEX,FOR	1

RELEASABLE

REVISION HISTORY			BASIC PART NO: KA730										
ENG	ECO NUMBER	REV	SECTION A OF A				D	I	G	I	T	A	L
	INITIAL	A	SECTION. VARIATION INDEX	DRN: A. ROCHA	DATE: 03-MAR-82								
			[A] A	CHK'D: D. LANDRY	DATE: 03-MAR-82	TITLE PARTS LIST							
			[B]	DES.ENG.: D. LANDRY	DATE: 03-MAR-82	11730 PROCESSOR MODULE SET							
			[C]	RESP.ENG.: D. LANDRY	DATE: 03-MAR-82	DOCUMENT NUMBER							
			[D]			SIZE	CODE	NUMBER			REV		
			[E]	MFG.ENG.: S. CASTIGLIONE	DATE: 03-MAR-82	K	PL	KA730-A-DBP			A		
			[F]	ASSEMBLY NUMBER:	TOP DOCUMENT NUMBER: #B-DD-KA730-A	FILE NAME: Z1867A.PLS					EDIT #: 3		

*THIS DRAWING AND SPECIFICATIONS HEREIN, ARE THE PROPERTY OF DIGITAL EQUIPMENT CORPORATION AND SHALL NOT BE REPRODUCED OR COPIED OR USED IN WHOLE OR IN PART AS THE BASIS FOR THE MANUFACTURE OR SALE OF ITEMS WITHOUT WRITTEN PERMISSION.
COPYRIGHT (C) 1982. DIGITAL EQUIPMENT CORPORATION *

SIZE	CODE	NUMBER	REV.
B	DD	M8390-0	B

DRAWING NO.	NO. OF SHTS.	PART NO.	DESCRIPTION	REVISIONS
			MODULE REVISION	A B
B-DD-M8390-0-0	1		DRAWING DIRECTORY	A B
B-UA-M8390-0-0	2		UNIT ASSEMBLY	A A
K-PL-M8390-0-DBP	2		PARTS LIST	A B
		5013860	ETCH BOARD REVISION	B B
K-PC-5013860-0-DBC			DESIGN DATA BASE PC	A B
D-MD-5013860-0-0	5		DRILL AND ETCH DRAWING	A A
D-EC-5013860-0	3		ETCH CUT DRAWING	A B
K-CS-M8390-0-DBS			DESIGN DATA BASE SUDS	A B
D-CS-M8390-0-DAPA	1	*	MICRO WORD DECODE AND REG ADDR GEN	A B
D-CS-M8390-0-DAPB	1	*	DATA PATH CLOCKS AND CONTROL	A B
D-CS-M8390-0-DAPC	1	*	DATA PATH AND LS (HIGH WORD)	A B
D-CS-M8390-0-DAPD	1	*	DATA PATH AND LS (LOW WORD)	A B
D-CS-M8390-0-DAPE	1	*	BUS IB AND BUS D DRIVERS	A B
D-CS-M8390-0-DAPF	1	*	BUS NAD AND BUS IB CONTROL	A B
D-CS-M8390-0-DAPH	1	*	OS MUX AND CC CONTROL	A B
D-CS-M8390-0-DAPJ	1	*	CONTROL STORE REG AND SEQUENCER	A B
D-CS-M8390-0-DAPK	1	*	MICRO PC AND INTERRUPT CONTROL	A B
D-CS-M8390-0-DAPL	1	*	CONSOLE INTERFACE AND CONTROL	A B
D-CS-M8390-0-DAPM	1	*	FILTER CAPACITORS	A B
D-BD-M8390-0-0	1	*	DATA PATH BLOCK DIAGRAM	∝ A
D-GL-M8390-0-0	13	*	ROM AND PAL LISTINGS	A
D-BD-M8390-0-1	1		11/730 CONTROL STORE FORMATS	- A
D-TD-M8390-0-0	1		11/730 CPU MICRCOYCLE TIMING	- A

NOTES:

*CONTROL STORE IS THE SUDS DATA BASE

NO CONTROLLED PAPER ORIGINALS EXIST

REVISIONS	REV.	CHG NO.	DATE
	B	TW001	12-81

"THIS DRAWING AND SPECIFICATIONS, HEREIN, ARE THE PROPERTY OF DIGITAL EQUIPMENT CORPORATION AND SHALL NOT BE REPRODUCED OR COPIED OR USED IN WHOLE OR IN PART AS THE BASIS FOR THE MANUFACTURE OR SALE OF ITEMS WITHOUT WRITTEN PERMISSION.

COPYRIGHT© 1981 DIGITAL EQUIPMENT CORPORATION

digital

USED ON OPTION/MODEL			

DRN.	J. CASEY	7-15-80
CHK'D	J. CASEY	7-15-80
ENG.	S. LACKEY	8-8-80
PROD.	C. CONSIDINE	8-8-80

TITLE: DAP

SIZE	CODE	NUMBER	REV.
B	DD	M8390-0	B

SHEET 1 OF 1

DRB 126

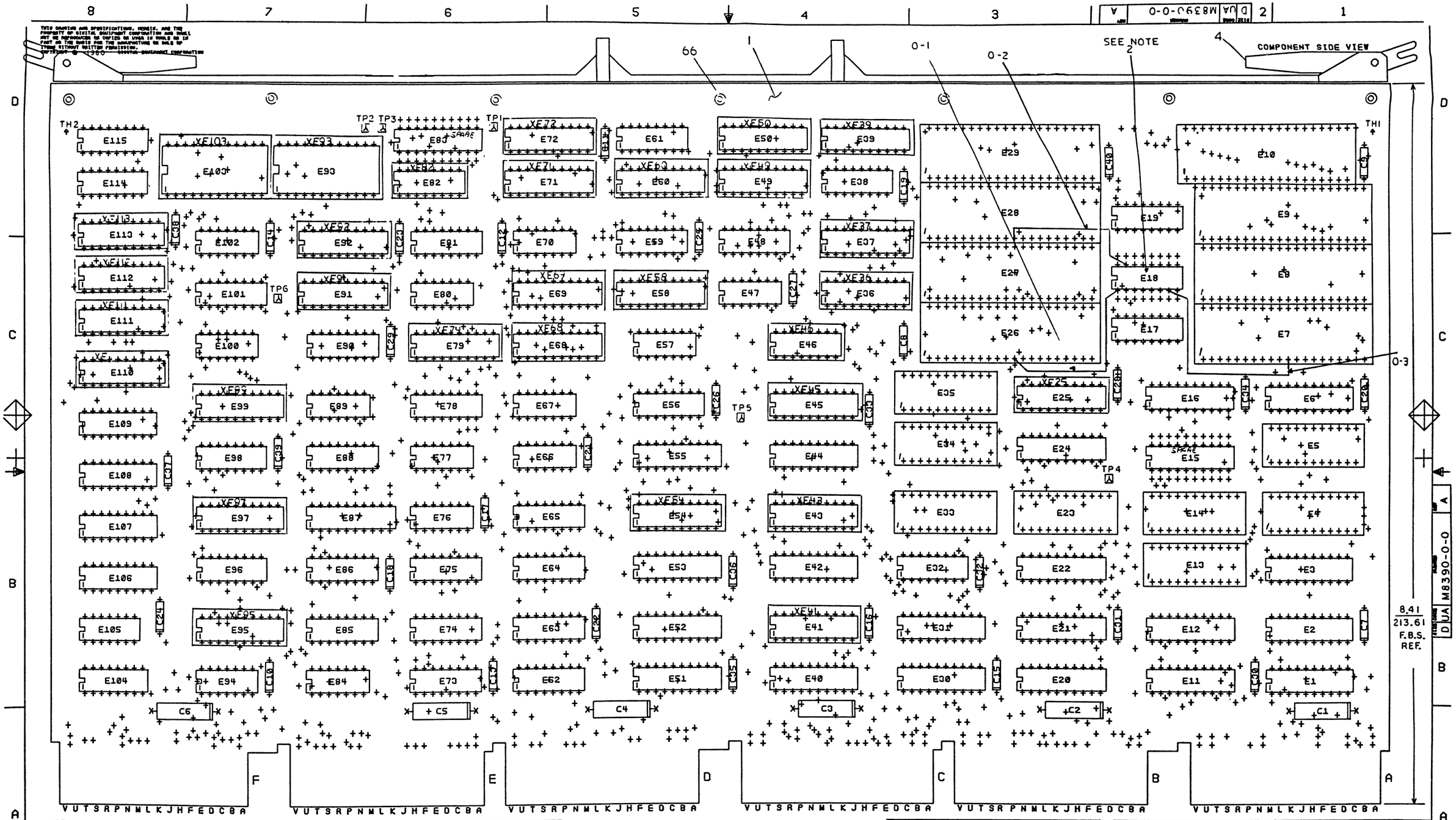

NOTES:
1. SPARE IC POSITIONS ARE E15, E83
2. ADD E18 IN SPARE IC LOCATION

STEP ℄	↑ Y AXIS — STEP — TIMES
REPEAT	→ X AXIS — STEP — TIMES

CHK	CHANGE NO	REV

ETCH REV.	B
DATA BASE REV.	B

SIGNATURES	DATE
DRN.	3-3-80
CHK'D. E.T. GERRY	3-4-80
MECH. ENG.	8-8-80
PROJ. ENG.	8-8-80
PROD.	8-8-80
SCALE 2/1	
SHT. 1 OF 2	
NEXT HIGHER ASSY. B-DD-M8390-0	

digital

TITLE D.A.P.

SIZE	CODE	NUMBER	REV
D	UA	M8390-0-0	A

1 MS#1701458

"THIS DRAWING AND SPECIFICATIONS, HEREIN, ARE THE PROPERTY OF DIGITAL EQUIPMENT CORPORATION AND SHALL NOT BE REPRODUCED OR COPIED OR USED IN WHOLE OR IN PART AS THE BASIS FOR THE MANUFACTURE OR SALE OF ITEMS WITHOUT WRITTEN PERMISSION.
COPYRIGHT © 1980 DIGITAL EQUIPMENT CORPORATION"

REWORK INSTRUCTIONS

WIRE ADDS SIDE 1:

0-1 FROM E18-1 TO E26-11
0-2 FROM E18-15 TO E23-11
0-3 FROM E18-7 TO E7-11

REVISION HISTORY

DATE	ECO NUMBER	REV

TITLE: DAP

DOCUMENT NUMBER

SIZE	CODE	NUMBER	REV.
D	UA	M8390-0-0	A

SCALE 2-1 SHEET 2 OF 2

TW

AUTOMATED BY PRTLST.3M(41) — P A R T S L I S T — SHEET A1 OF A2

LINE	ITEM	DOCUMENT NUMBER	PART NUMBER	DESCRIPTION	QTY PER VARIATION 00	REFERENCE DESIGNATOR
1	1	D-MD-5013860-0-0	5013860-00	DAP	1	
2	2		1012084-01	8 MFD 25V +75-10% AL EL	6	C1-C6
3	3		1012784-00	.047 MFD 50V +80-20% CER	34	C7-C40
4	4		1216988-02	HANDLE,MODULE,HEX TWO EJECTORS	1	
5	5		1215006-02	SKT,IC 16PIN DIP TIN PLATE	2	XE46,XE82
6	6		1215006-04	SKT,IC 20PIN DIP TIN PLATE	26	XE36,XE37,XE39,XE41,XE43,XE45,
						CONT XE49,XE50,XE54,XE58,XE60,XE68,
						CONT XE69,XE71,XE72,XE79,XE91,XE92,
						CONT XE95,XE97,XE99,XE110,
						CONT XE111-XE113,XE25
7	7		1215006-06	SKT,IC 24PIN DIP TIN PLATE	2	XE93,XE103
8	8		1311003-01	R NETWORK 14-180 14-390 16PIN	1	E73
9	9		1910532-00	74S00 NAND GATE-QUAD 2IN	2	E57,E89
10	10		1910534-00	74S04 INVERTER GATE-HEX 1I	2	E67,E77
11	11		1910536-00	74S10 NAND GATE-TRIPLE 3IN	1	E102
12	12		1910539-00	74S20 NAND GATE-DUAL 4INPU	1	E100
13	13		1910542-00	74S64 A-O-I GATE 4-2-3-2	1	E94
14	14		1910547-00	74S153 MUX 1 OF 4 (DUAL)	1	E32
15	15		1910549-00	74S158 MUX 1 OF 2 (QUAD)	6	E56,E78,E90,E98,E101,E114
16	16		1910956-00	74S151 MUX 1 OF 8	2	E81,E88
17	17		1910957-00	74S175 FF-D QUAD COMMON CLO	2	E64,E75
18	18		1911579-00	8641 TRANSCEIVER,BUS,QUA	1	E74
19	19		1911641-00	SN 74S257 MUX,QUAD 2 TO 1	1	E33
20	20		1911675-00	74S138 DECODER/DEMUX 3-8 LIN	1	E62
21	21		1911676-00	74S139 DECODER-DUAL TWO-INP	2	E48,E63
22	22		1911712-00	74S51 AND-OR GATE-INVERT D	2	E47,E105
23	23		1912097-00	SN 74S182 LOOK AHD CARRY GEN	2	E17,E19
24	24		1912388-00	74S02 NOR GATE-QUAD 2IN,PO	4	E70,E76,E80,E84
25	25		1912586-00	DM 85S68N REGISTER,64BIT EDGE	4	E106-E109
26	26		1912648-00	LS251 MUX 8 INPUT,TRI-STA	1	E96

REVISION HISTORY

ENG	ECO NUMBER	REV
---	INITIAL	A
KO	M8390-TW001	B

BASIC PART NO: M8390

SECTION A OF A

SECTION.VARIATION INDEX

[A] 00
[B]
[C]
[D]
[E]
[F]
[H]
[J]
[K]
[L]
[M]
[N]

DRN: J.CASEY — DATE: 27-FEB-80

CHK'D: E.T.GERRY — DATE: 27-FEB-80

DES.ENG: S.LACKEY — DATE: 7-29-80

RESP.ENG.: S.LACKEY — DATE: 7-29-80

MFG.ENG.: J.CONSIDINE — DATE: 8-AUG-80

ASSEMBLY NUMBER: D-UA-M8390-0-0

TOP DOCUMENT NUMBER: B-DD-M8390-0-0

D I G I T A L

TITLE: PARTS LIST

DAP

DOCUMENT NUMBER

SIZE	CODE	NUMBER	REV
K	PL	M8390-0-DBP	B

FILE NAME: Z1269B.PLS

EDIT #: 18

"THIS DRAWING AND SPECIFICATIONS HEREIN, ARE THE PROPERTY OF DIGITAL EQUIPMENT CORPORATION AND SHALL NOT BE REPRODUCED OR COPIED OR USED IN WHOLE OR IN PART AS THE BASIS FOR THE MANUFACTURE OR SALE OF ITEMS WITHOUT WRITTEN PERMISSION.
COPYRIGHT (C) 1982. DIGITAL EQUIPMENT CORPORATION "

LINE	ITEM	DOCUMENT NUMBER	PART NUMBER	DESCRIPTION	QTY PER VARIATION 00	REFERENCE DESIGNATOR
27	27		1912660-00	74S253 MUX 1 OF 4 (DUAL)	2	E59,E61
28	28		1912746-00	DEC 74S37 NAND GATE-QUAD 2IN	1	E66
29	29		1912796-00	74148 EXCODER,PRIORITY,8 T	1	E65
30	30		1912860-00	LS259 LATCH 8BIT	1	E86
31	31		1912865-00	LS283 ADDER-4BIT BINARY FU	1	E115
32	32		1913245-01	2901A MICROPROCESSOR-4 BIT	8	E7-E10,E26-E29
33	33		1913670-00	74S373 LATCH 8BIT TRASP TR	7	E3,E6,E12,E16,E21,E22,E24
34	34		1913671-00	74S374 FF-D OCTAL TRISTATE	10	E1,E20,E30,E40,E42,E51-E53,E55, CONT E87
35	35		1914866-00	AM 93S48PCGEN/CHECK PARITY, 4B	2	E85,E104
36	36		1915218-00	LS245 TRANSCEIVER,BUS,OCT	4	E2,E11,E31,E44
37	37		1915697-00	RAM 256X4 TRI-STATE	8	E4,E5,E13,E14,E23,E33-E35
38	38		23001K4-00	K4-01	1	E69
39	39		23002K4-00	K4-01	1	E95
40	40		23003K4-00	K4-01	3	E97,E99,E110
41	41		23008K3-00	K3-01 PAL,REG, CONT	1	E58
42	42		23032K3-00	K3-01 PAL,REG, CONT	1	E41
43	43		23010K3-00	K3-01 PAL,REG, CONT	1	E60
44	44		23011K3-00	K3-01 PAL,REG, CONT	1	E49
45	45		23012J5-00	J5-01 PAL,LOGIC,CONT	1	E79
46	46		23006K3-00	K3-01 PAL,REG, CONT	1	E72
47	47		23007K3-00	K3-01 PAL,REG, CONT	1	E71
48	48		23012K3-00	K3-01 PAL,REG, CONT	1	E112
49	49		23013J5-00	J5-01 PAL,LOGIC,CONT	1	E45
50	50		23013K3-00	K3-01 PAL,REG, CONT	1	E37
51	51		23014J5-00	J5-01 PAL,LOGIC,CONT	1	E91
52	52		23014K3-00	K3-01 PAL,REG, CONT	1	E39
53	53		23015J5-00	J5-01 PAL,LOGIC,CONT	1	E25
54	54		23015K3-00	K3-01 PAL,REG, CONT	1	E50
55	55		23016J5-00	J5-01 PAL,LOGIC,CONT	1	E111
56	56		23017J5-00	J5-01 PAL,LOGIC,CONT	1	E92
57	57		23018J5-00	J5-01 PAL,LOGIC,CONT	1	E113
58	58		23019J5-00	J5-01 PAL,LOGIC,CONT	1	E68
59	59		23020J5-00	J5-01 PAL,LOGIC,CONT	1	E54
60	60		23021J5-00	J5-01 PAL,LOGIC,CONT	1	E43
61	61		23041J5-00	J5-01 PAL,LOGIC,CONT	1	E36
62	62		23069D1-00	D1-02	1	E93
63	63		23133F3-00	F3-03	1	E103
64	64		23954A9-00	A9-01	1	E82
65	65		23945A9-00	A9-01	1	E46
66	66		9009000-00	EYELET,ROLL FLANGE .1210DX .156	12	
67	67		9009149-00	PIN, STAKING, P.C. BOARD, .025 X	6	TP1-TP6
68	68		1311003-02	R NETWORK 14-330 14-680 16PIN	1	E18
69	69		9105740-55	WIRE(WRAP)30AWG UL1423	A/R	

########## RELEASABLE/NO REF DES CHECK ##########

D	I	G	I	T	A	L	TITLE	SIZE	CODE	DOCUMENT NUMBER	REV
							DAP	K	PL	M8390-0-DBP	B

SECTION A OF A

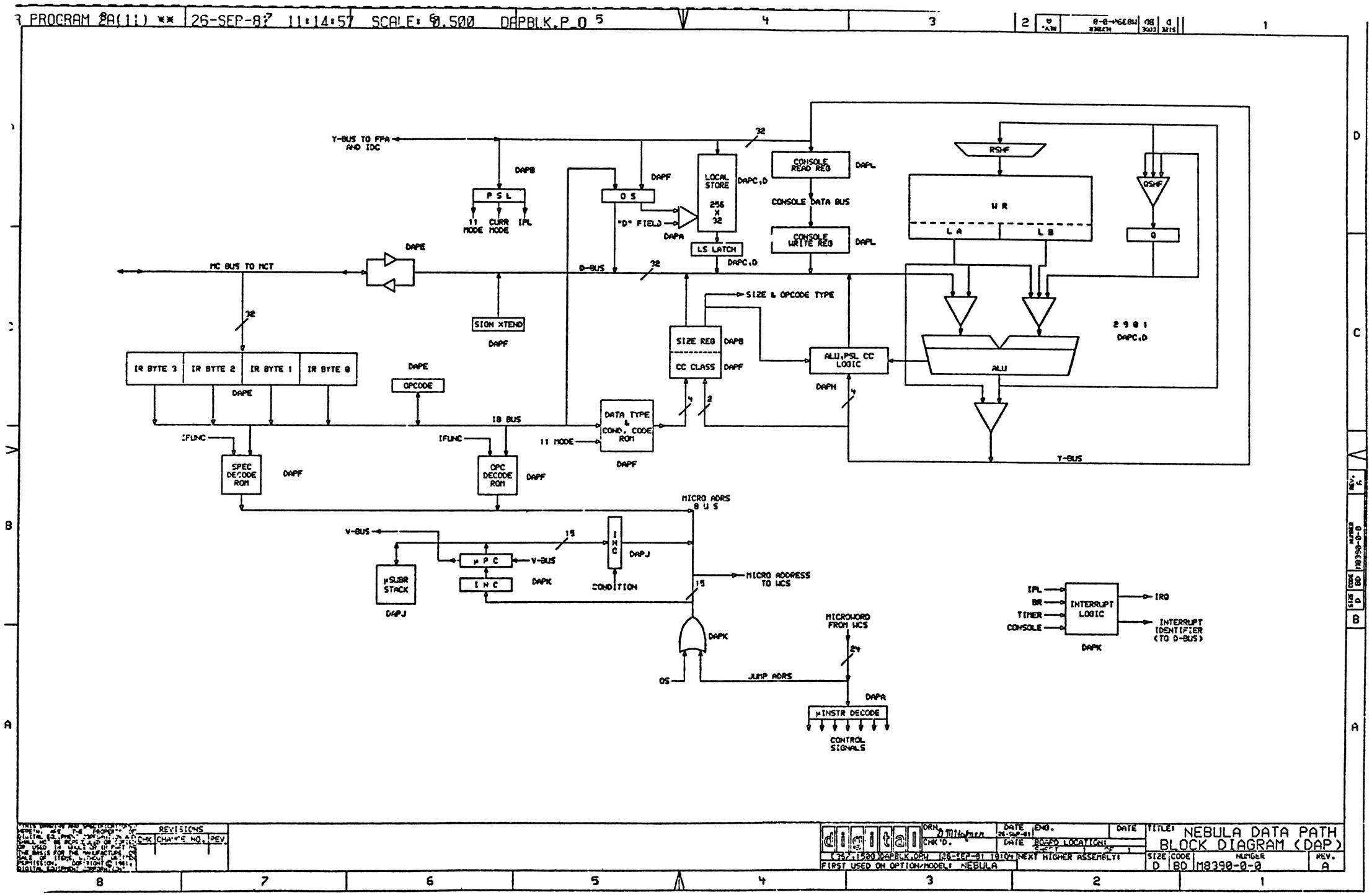
PROGRAM 2A(11) ** 26-SEP-81 11:14:57 SCALE: 0.500 DAPBLK.P_0
Y-BUS TO FPA AND IDC
DAPB
P S L
11 MODE
CURR MODE
IPL
O S
DAPF
"D" FIELD
DAPA
LOCAL STORE
256 X 32
DAPC,D
LS LATCH
DAPC,D
CONSOLE READ REG
DAPL
CONSOLE DATA BUS
CONSOLE WRITE REG
DAPL
RSHF
W R
L A
L B
QSHF
Q
MC BUS TO MCT
DAPE
D-BUS
32
SIGN XTEND
DAPF
SIZE & OPCODE TYPE
SIZE REG
DAPB
CC CLASS
DAPF
ALU,PSL CC LOGIC
DAPH
ALU
2 9 0 1
DAPC,D
IR BYTE 3
IR BYTE 2
IR BYTE 1
IR BYTE 0
DAPE
OPCODE
IB BUS
DATA TYPE & COND. CODE ROM
DAPF
11 MODE
IFUNC
SPEC DECODE ROM
DAPF
OPC DECODE ROM
DAPF
Y-BUS
MICRO ADRS BUS
V-BUS
15
μ P C
V-BUS
I N C
DAPK
μSUBR STACK
DAPJ
I N C
DAPJ
CONDITION
MICRO ADDRESS TO WCS
15
DAPK
OS
JUMP ADRS
MICROWORD FROM WCS
24
DAPA
μINSTR DECODE
CONTROL SIGNALS
IPL
BR
TIMER
CONSOLE
INTERRUPT LOGIC
DAPK
IRQ
INTERRUPT IDENTIFIER (TO D-BUS)
REVISIONS
CHK
CHANGE NO.
REV
digital
DRN
CHK'D.
DATE 26-SEP-81
ENG.
DATE
BOARD LOCATION:
SHEET 1 OF 1
(367,1500) DAPBLK.DRW 26-SEP-81 10:04
NEXT HIGHER ASSEMBLY:
FIRST USED ON OPTION/MODEL: NEBULA
TITLE: NEBULA DATA PATH BLOCK DIAGRAM (DAP)
SIZE D
CODE BD
NUMBER M8390-0-0
REV. A

MICRO WORD FORMATS

BASIC

23	22	21–16	15–9	8–7	6–5	4–0
P	1	DP FUNC	D ADRS (LS)	B (WR)	CC	SCTL

MOVE

23	22–20	19–17	16–9	8–7	6–5	4–0
P	0 1 1	MDP	X D ADRS	B	CC	SCTL

EXTENDED

23	22–20	19–14	13–11	10–9	8–7	6–5	4–0
P	0 1 0	XDP	SI	A	B	CC	SCTL

MEM REQ

23	22–19	18–16	15–9	8–7	6–5	4–0
P	0 0 1 1	MF <4:2>	D ADRS	MF <1:0>	DT	SCTL

MISC

23	22–19	18	17	16	15–12	11–9	8	7	6	5	4–0
P	0 0 1 0	PORT	0	0	MISC 1	MISC 2	0	WR	0	0	SCTL

MISC INSTRUCTION FOR PORT OPERATION

18	17–15	14–13	12–10	9	8	7	6	5	4–0
PORT	PORT SELECT	PORT FUNC	R/W FUNC OR CONTROL FUNC	0	0	WR	0	0	SCTL

JUMP

23	22–19	18	17–4	3–0
P	0 0 0 1	OS	JUMP ADDRESS	JCTL

DECODE

23	22–19	18	17–12	11–9	8	7	6	5	4	3–0
P	0 0 0 0	BPC	JMP ADRS	IFUNC	IB REQ	CM H BYTE	LD DT	LD RDST	ROM SEL	JCTL.

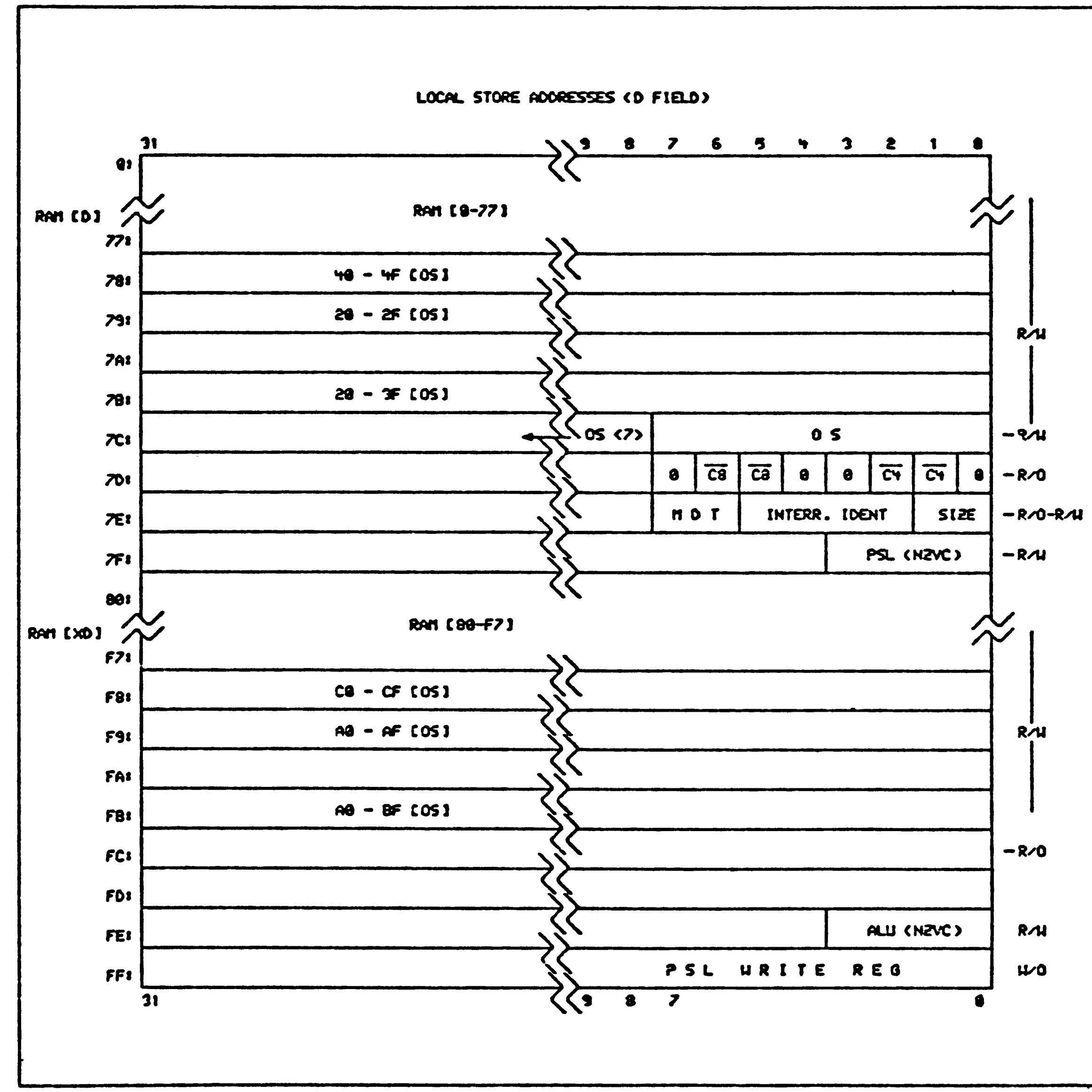

THIS DRAWING AND SPECIFICATIONS, HEREIN, ARE THE PROPERTY OF DIGITAL EQUIPMENT CORPORATION AND SHALL NOT BE REPRODUCED OR COPIED OR USED IN WHOLE OR IN PART AS THE BASIS FOR THE MANUFACTURE OR SALE OF ITEMS WITHOUT WRITTEN PERMISSION. COPYRIGHT © 1981, DIGITAL EQUIPMENT CORPORATION

REVISIONS		
CHK	CHANGE NO.	REV

digital

DRN. D. M. Hoffman	DATE 26-SEP-81	ENG.	DATE
CHK'D.	DATE	BOARD LOCATION:	SHEET 1 OF 1
(357,1500)CPUMCD.DRW	26-SEP-81 10:04	NEXT HIGHER ASSEMBLY:	
FIRST USED ON OPTION/MODEL: 11/730			

TITLE: 11/730 µCONTROL STORE FORMATS

SIZE	CODE	NUMBER	REV.
D	BD	M8390-0-1	A

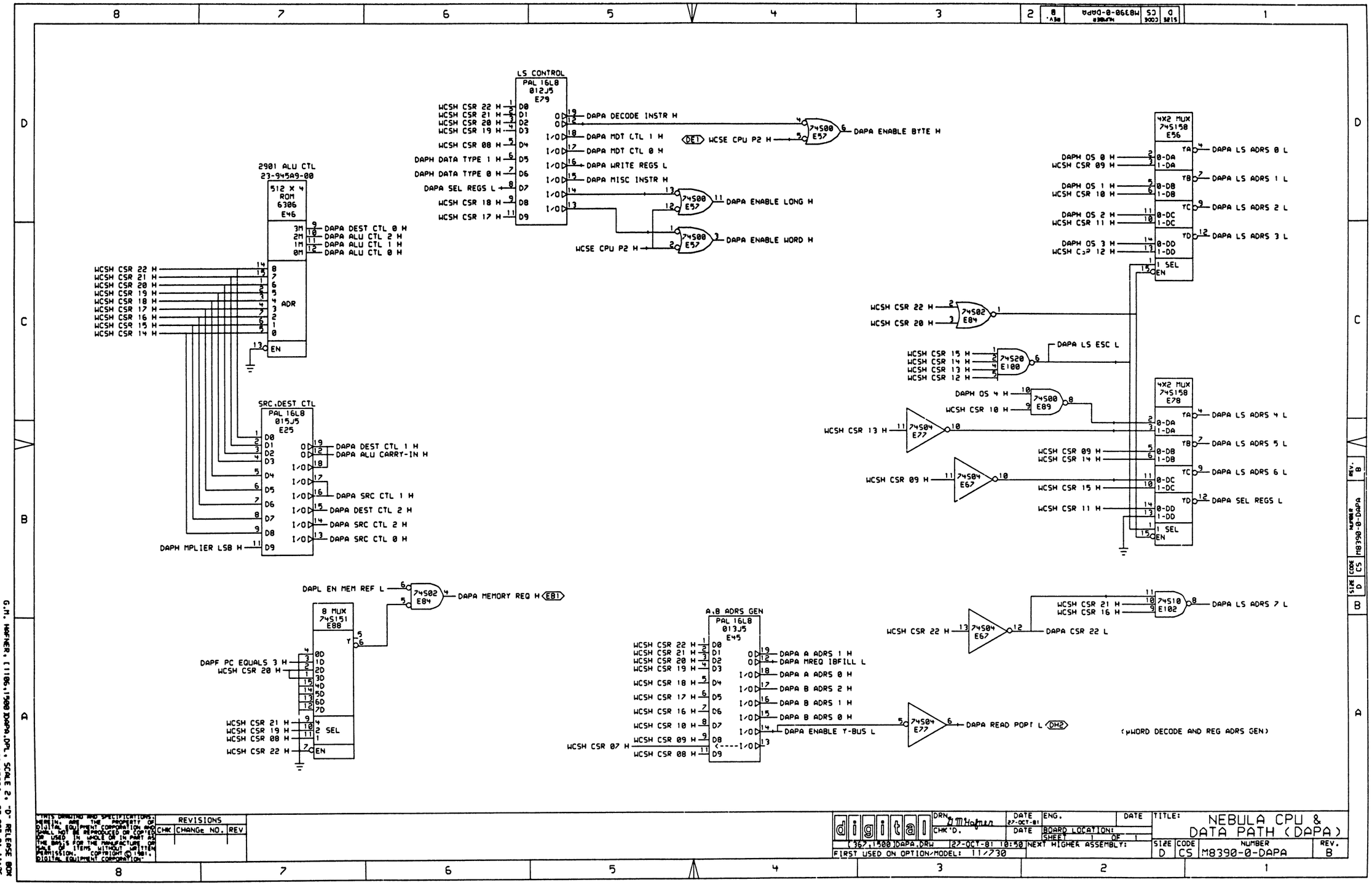

"THIS DRAWING AND SPECIFICATIONS, HEREIN, ARE THE PROPERTY OF DIGITAL EQUIPMENT CORPORATION AND SHALL NOT BE REPRODUCED OR COPIED OR USED IN WHOLE OR IN PART AS THE BASIS FOR THE MANUFACTURE OR SALE OF ITEMS WITHOUT WRITTEN PERMISSION. COPYRIGHT © 1981, DIGITAL EQUIPMENT CORPORATION"

REVISIONS		
CHK	CHANGE NO.	REV

digital

DRN G.M.Hafner DATE 27-OCT-81 ENG. DATE
CHK'D. DATE BOARD LOCATION:
SHEET 1 OF 1
(367,1500)DAPA.DRW 27-OCT-81 10:50 NEXT HIGHER ASSEMBLY:
FIRST USED ON OPTION/MODEL: 11/730

TITLE: NEBULA CPU & DATA PATH (DAPA)

SIZE	CODE	NUMBER	REV.
D	CS	M8390-0-DAPA	B

G.M. HAFNER, [1106,1500]DAPA.DPL, SCALE 2, "D" RELEASE BOX
G.M. HAFNER DAPA.PLO[1106,1500] 27-OCT-81 11:26

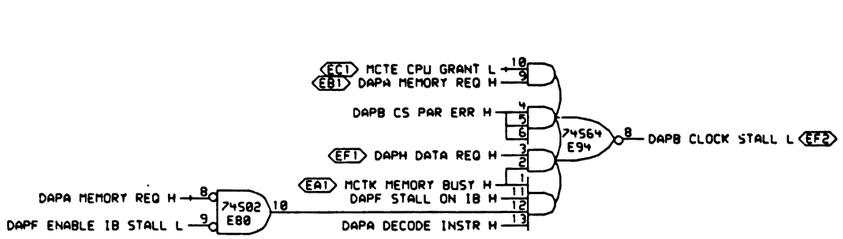

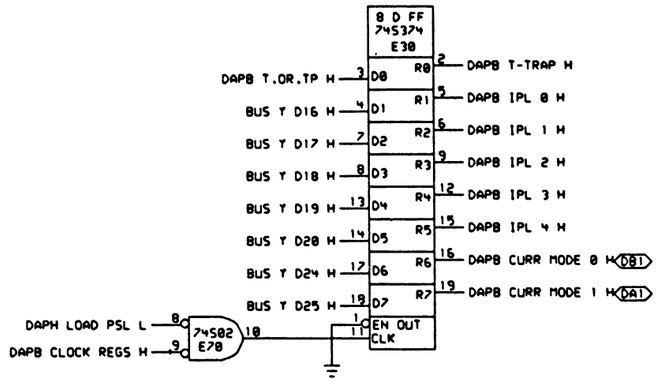

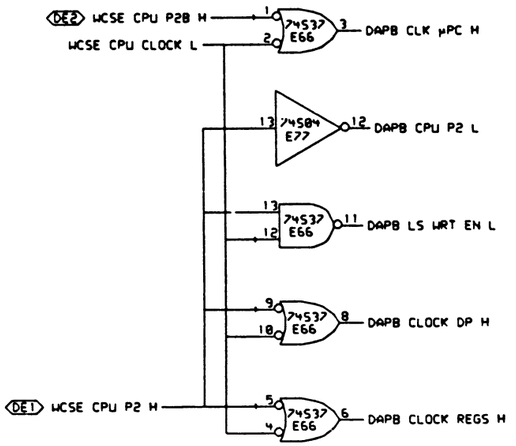

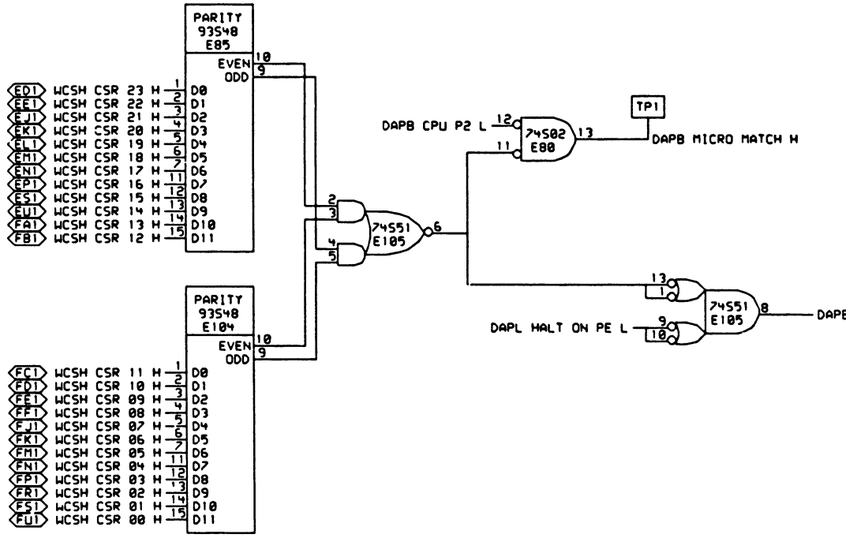

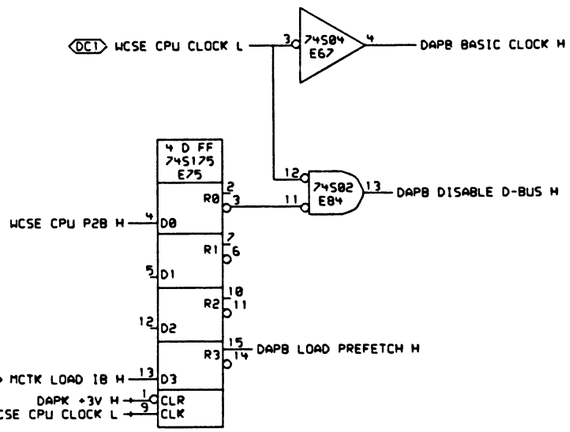

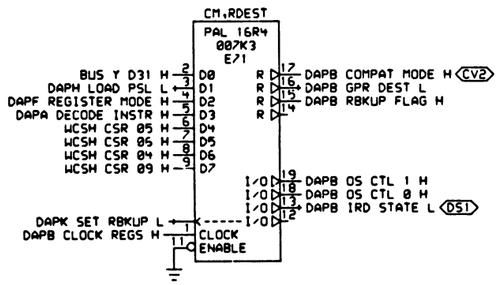

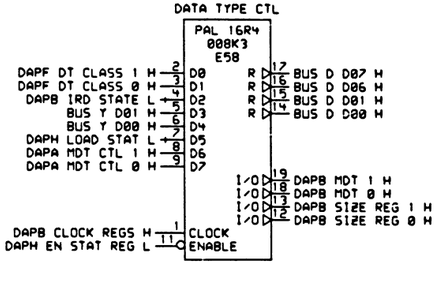

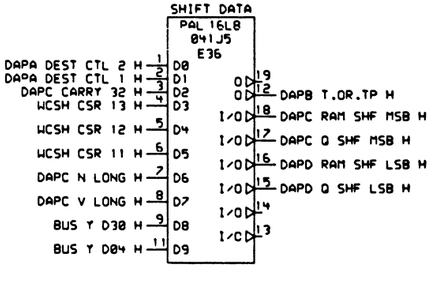

(DATA PATH CLOCKS & CTL)

"THIS DRAWING AND SPECIFICATIONS, HEREIN, ARE THE PROPERTY OF DIGITAL EQUIPMENT CORPORATION AND SHALL NOT BE REPRODUCED OR COPIED OR USED IN WHOLE OR IN PART AS THE BASIS FOR THE MANUFACTURE OR SALE OF ITEMS WITHOUT WRITTEN PERMISSION. COPYRIGHT © 1981 DIGITAL EQUIPMENT CORPORATION"

REVISIONS		
CHK	CHANGE NO.	REV

digital

DRN G.M.Hafner DATE 27-OCT-81 ENG. DATE
CHK'D. DATE BOARD LOCATION: SHEET 1 OF 1
[367,1500]DAPB.DRW 27-OCT-81 10:51 NEXT H'GHER ASSEMBLY:
FIRST USED ON OPTION/MODEL: 11/730

TITLE: NEBULA CPU & DATA PATH (DAPB)

SIZE	CODE	NUMBER	REV.
D	CS	M8390-0-DAPB	B

G.M. HAFNER [1196,1500]DAPB.DPL; SCALE 2. "D" RELEASE BOX
G.M. HAFNER DAPB.PLO 1196,1500] 27-OCT-81 11:26

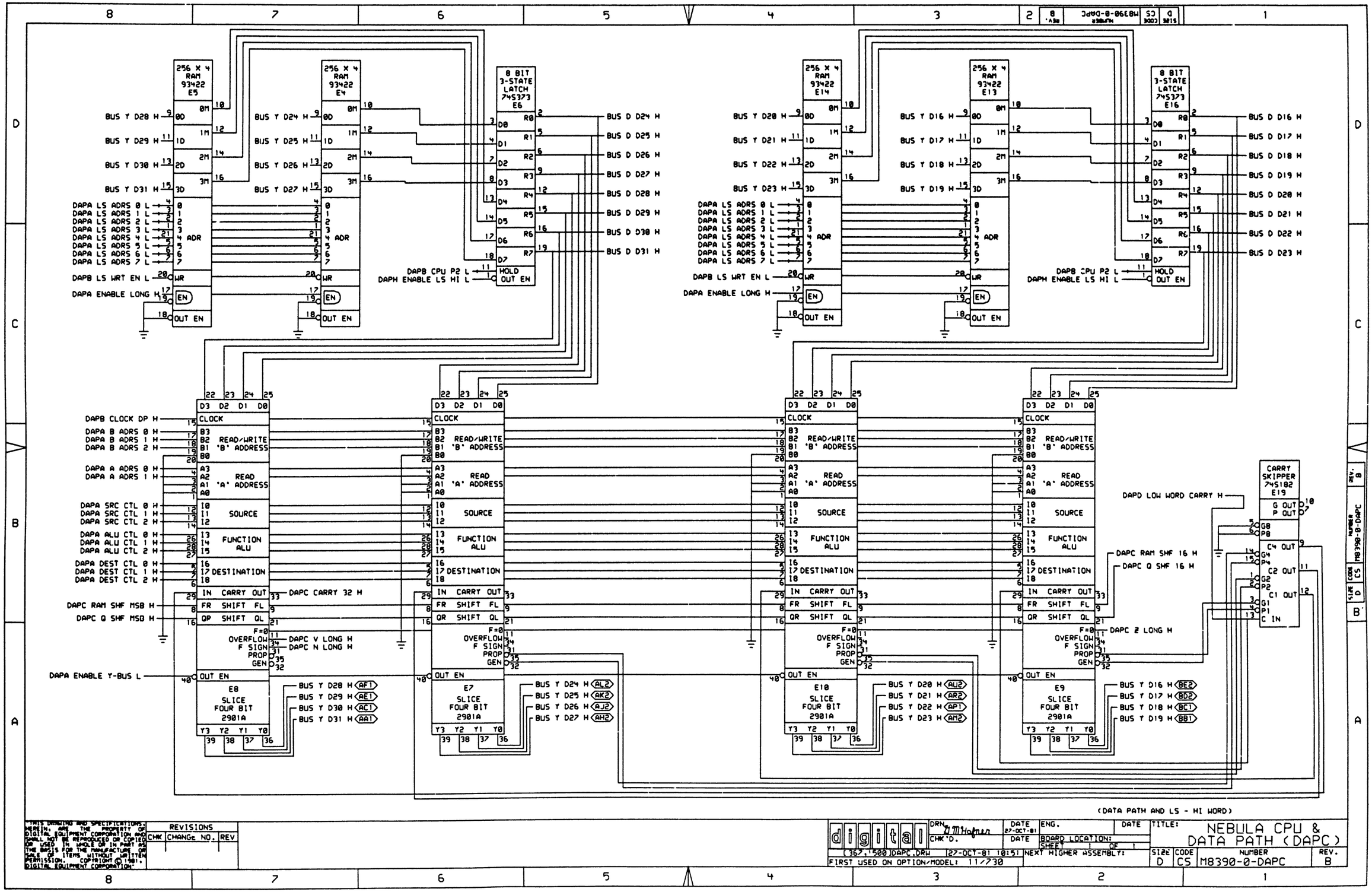

"THIS DRAWING AND SPECIFICATIONS, HEREIN, ARE THE PROPERTY OF DIGITAL EQUIPMENT CORPORATION AND SHALL NOT BE REPRODUCED OR COPIED OR USED IN WHOLE OR IN PART AS THE BASIS FOR THE MANUFACTURE OR SALE OF ITEMS WITHOUT WRITTEN PERMISSION. COPYRIGHT © 1981, DIGITAL EQUIPMENT CORPORATION"

REVISIONS		
CHK	CHANGE NO.	REV

digital

DRN. G M Hafner DATE 27-OCT-81 ENG. DATE

CHK'D. DATE BOARD LOCATION: SHEET 1 OF 1

(367,1500)DAPC.DRW 27-OCT-81 10:51 NEXT HIGHER ASSEMBLY:

FIRST USED ON OPTION/MODEL: 11/730

TITLE: NEBULA CPU & DATA PATH (DAPC)

SIZE	CODE	NUMBER	REV.
D	CS	M8390-0-DAPC	B

G.M. HAFNER, [1186,1500]DAPC.DPL, SCALE 2, "D" RELEASE BOX
G.M. HAFNER DAPC.PLO[1186,1500] 27-OCT-81 11:26

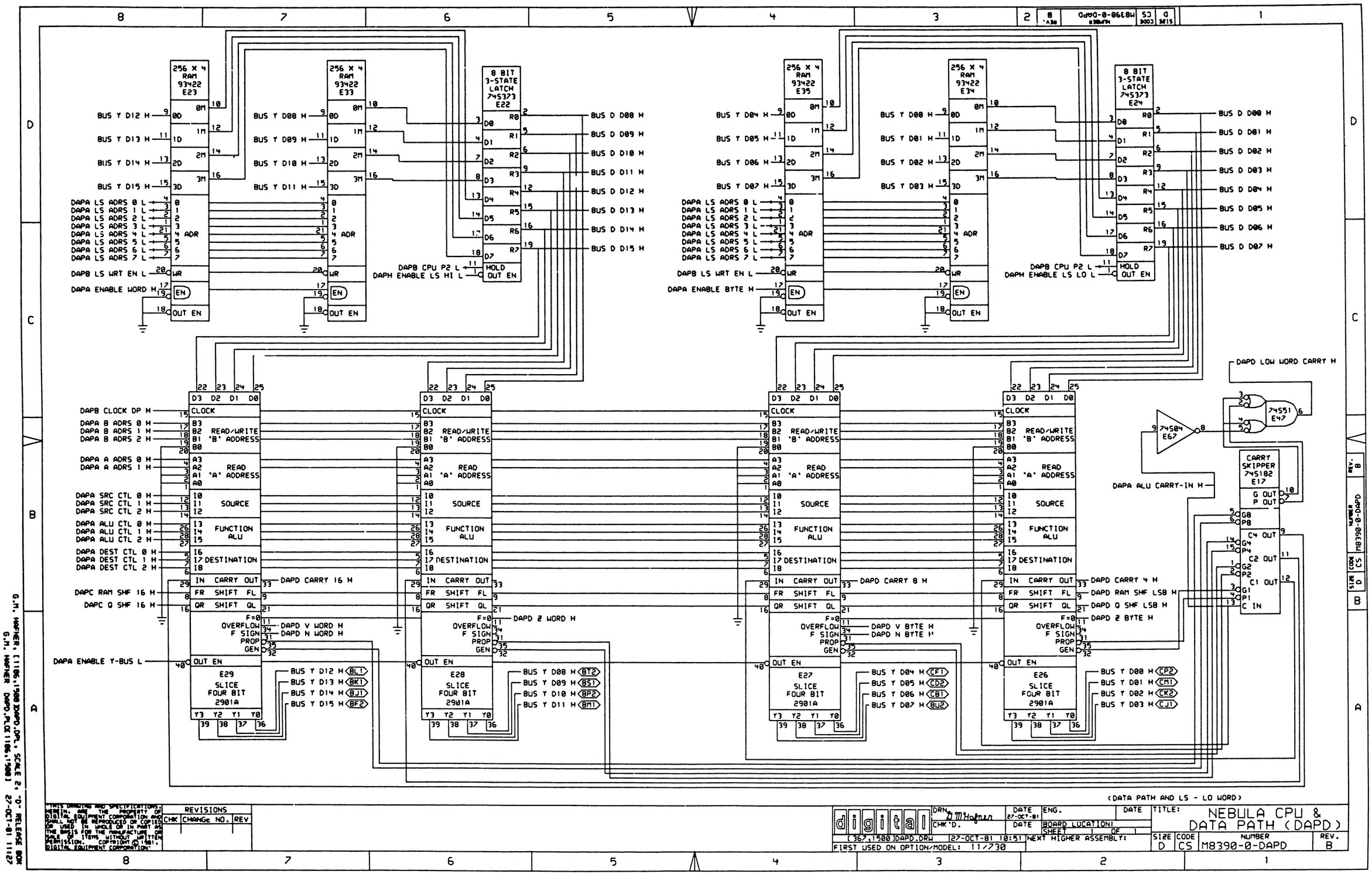

"THIS DRAWING AND SPECIFICATIONS, HEREIN, ARE THE PROPERTY OF DIGITAL EQUIPMENT CORPORATION AND SHALL NOT BE REPRODUCED OR COPIED OR USED IN WHOLE OR IN PART AS THE BASIS FOR THE MANUFACTURE OR SALE OF ITEMS WITHOUT WRITTEN PERMISSION. COPYRIGHT © 1981, DIGITAL EQUIPMENT CORPORATION"

REVISIONS		
CHK	CHANGE NO.	REV

digital

DRN G.M.Hafner | DATE 27-OCT-81 | ENG. | DATE

CHK D. | DATE | BOARD LOCATION: | SHEET 1 OF 1

(367,1500)DAPD.DRW 27-OCT-81 10:51 | NEXT HIGHER ASSEMBLY:

FIRST USED ON OPTION/MODEL: 11/730

TITLE: NEBULA CPU & DATA PATH (DAPD)

SIZE	CODE	NUMBER	REV.
D	CS	M8390-0-DAPD	B

G.M. HAFNER, [1196,1500]DAPD.DPL, SCALE 2, "D", RELEASE BOX
G.M. HAFNER DAPD.PLX[1196,1500] 27-OCT-81 11:27

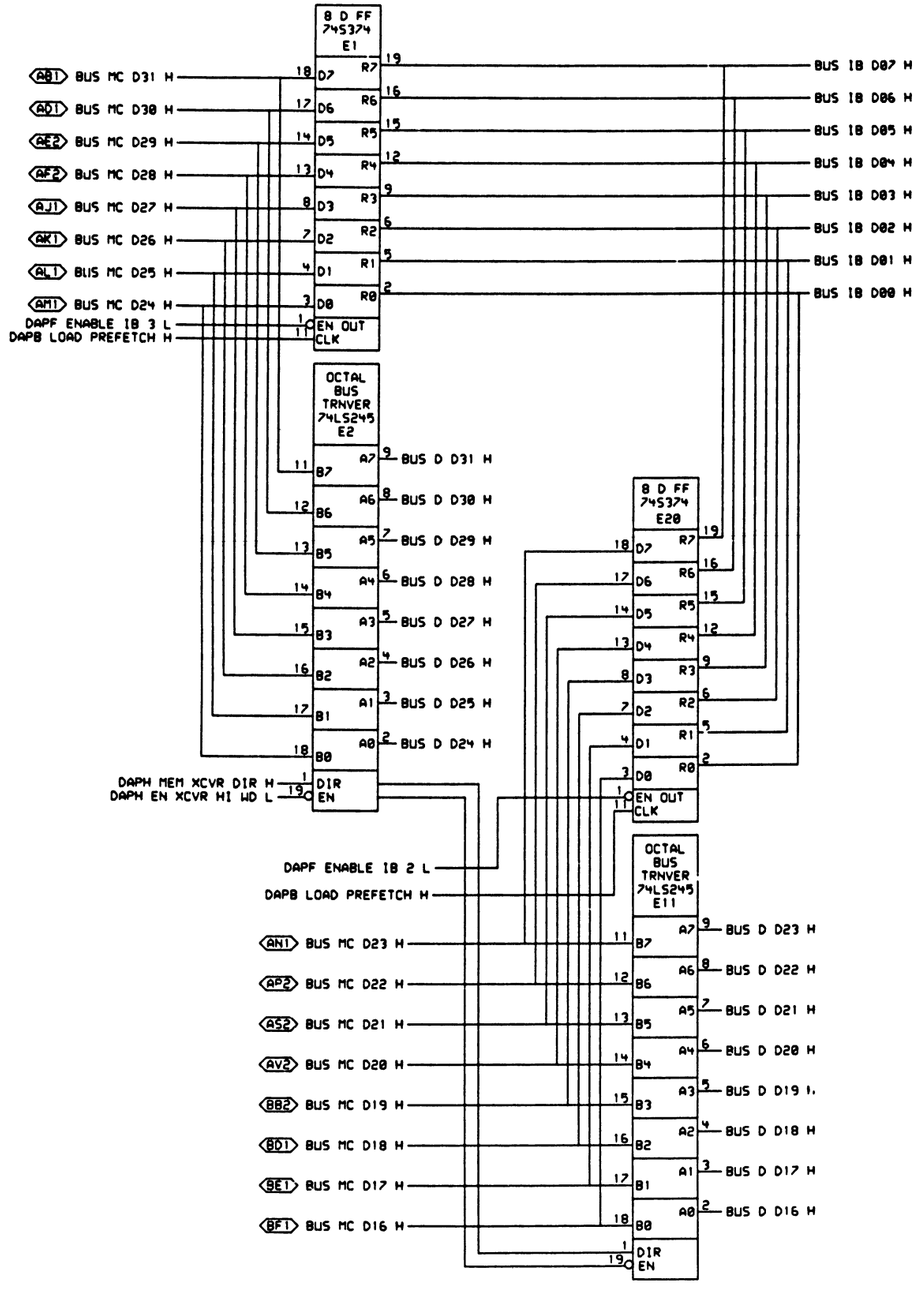

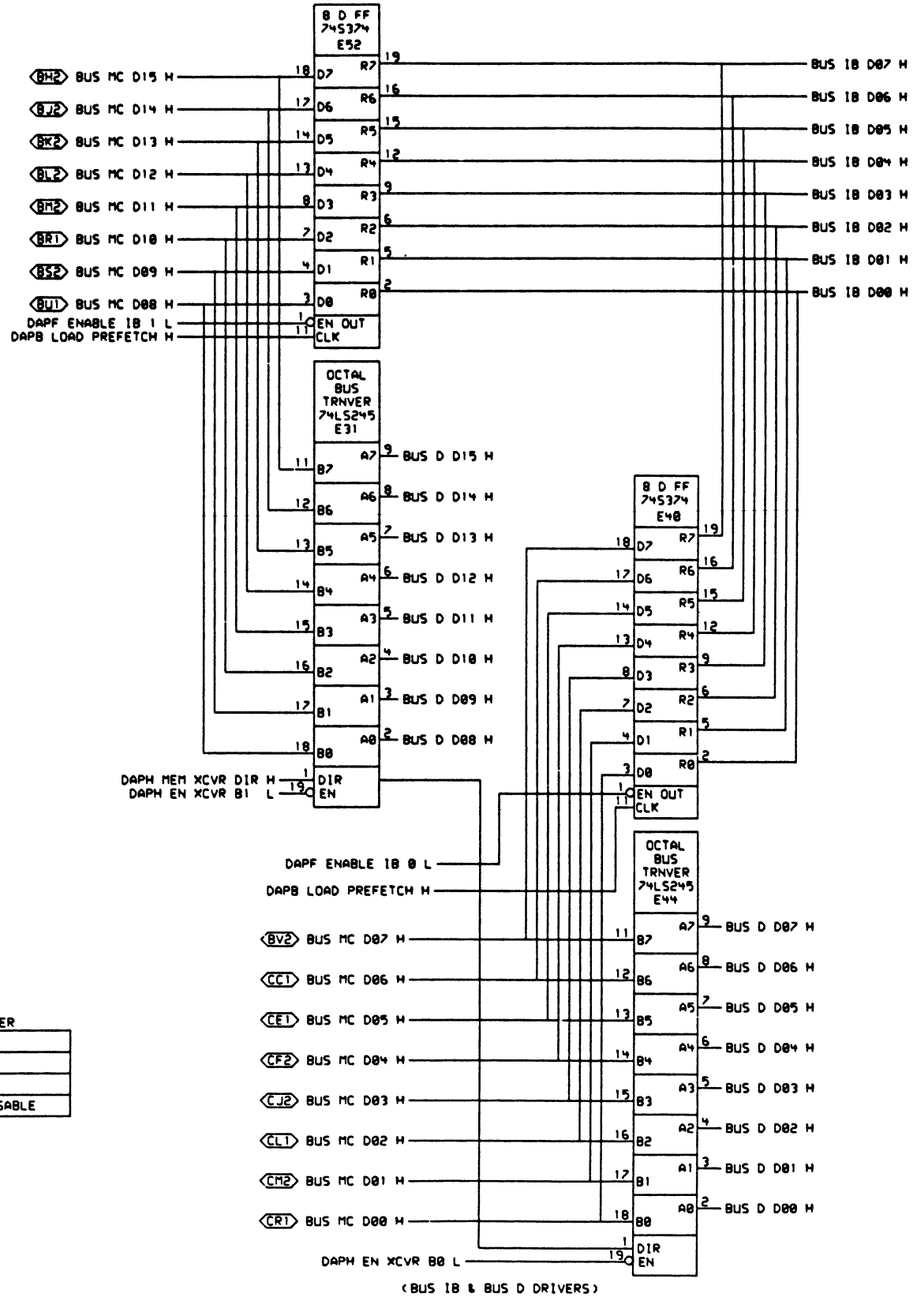

74LS245
BI-DIRECTIONAL DRIVER

EN	DIR	FUNCTION
L	L	B ---→ A
L	H	A ---→ B
H	X	TRI-STATE DISABLE

THIS DRAWING AND SPECIFICATIONS, HEREIN, ARE THE PROPERTY OF DIGITAL EQUIPMENT CORPORATION AND SHALL NOT BE REPRODUCED OR COPIED OR USED IN WHOLE OR IN PART AS THE BASIS FOR THE MANUFACTURE OR SALE OF ITEMS WITHOUT WRITTEN PERMISSION. COPYRIGHT © 1981, DIGITAL EQUIPMENT CORPORATION.

REVISIONS		
CHK	CHANGE NO.	REV

digital	DRN D.M.Hafner	DATE 27-OCT-81	ENG.	DATE	TITLE: NEBULA CPU & DATA PATH (DAPE)	
	CHK D.	DATE	BOARD LOCATION:			
			SHEET 1 OF 1			
[367,1500]DAPE.DRW	27-OCT-81 10:51	NEXT HIGHER ASSEMBLY:			SIZE D / CODE CS / NUMBER M8390-0-DAPE / REV. B	
FIRST USED ON OPTION/MODEL: 11/730						

G.H. HAFNER, [1186,1500]DAPE.DPL, SCALE 2, "D" RELEASE BOX
G.H. HAFNER DAPE.PLOT 1186,1500] 27-OCT-81 11:27

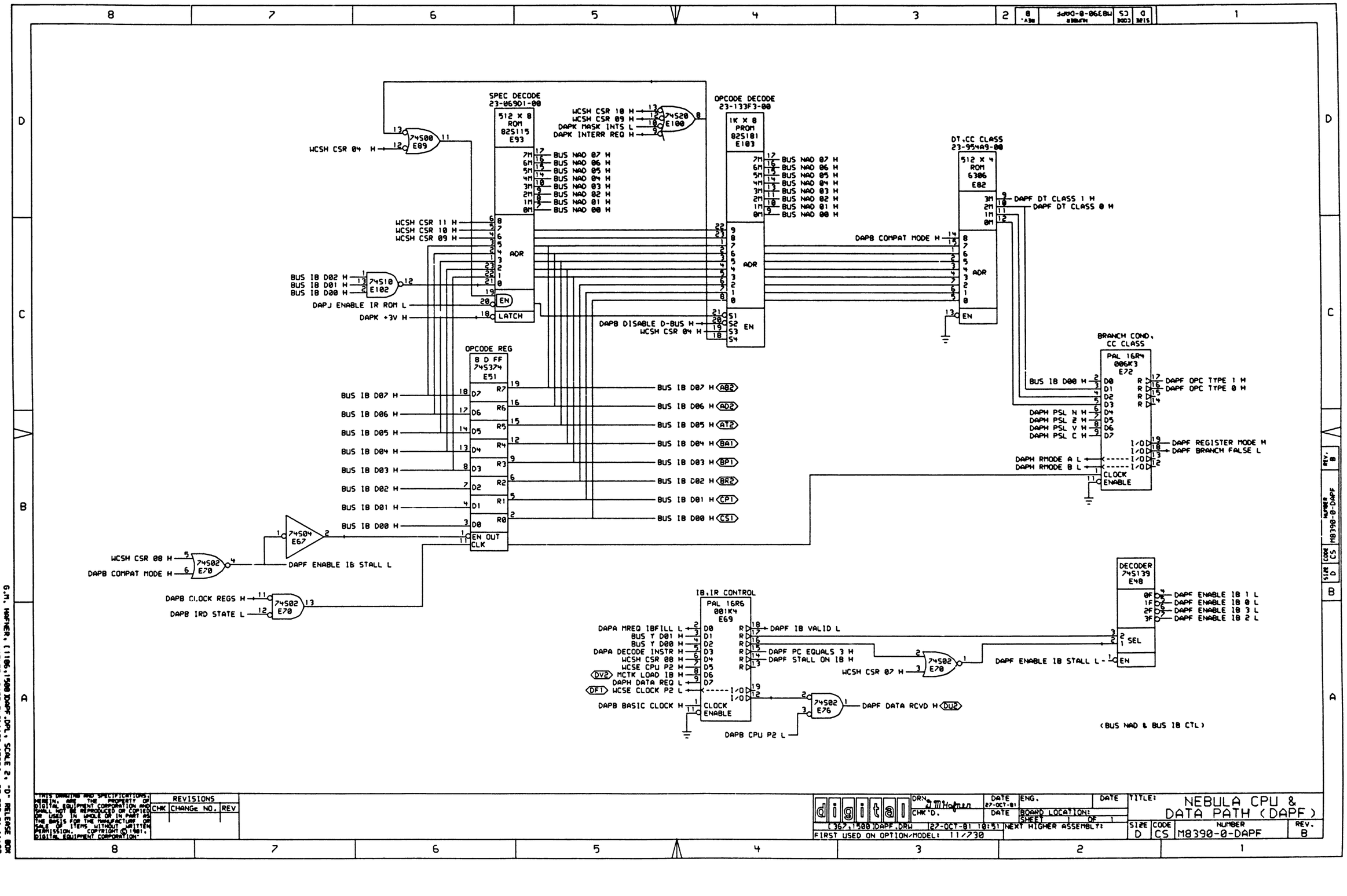
SPEC DECODE
23-06901-00
512 X 8
ROM
82S115
E93
OPCODE DECODE
23-133F3-00
1K X 8
PROM
82S181
E103
DT,CC CLASS
23-9549A9-00
512 X 4
ROM
6306
E82
74S00
E89
74S20
E100
WCSH CSR 04 H
WCSH CSR 10 H
WCSH CSR 09 H
DAPK MASK INTS L
DAPK INTERR REQ H
BUS NAD 07 H
BUS NAD 06 H
BUS NAD 05 H
BUS NAD 04 H
BUS NAD 03 H
BUS NAD 02 H
BUS NAD 01 H
BUS NAD 00 H
WCSH CSR 11 H
WCSH CSR 10 H
WCSH CSR 09 H
ADR
EN
LATCH
BUS IB D02 H
BUS IB D01 H
BUS IB D00 H
74S10
E102
DAPJ ENABLE IR ROM L
DAPK +3V H
DAPB DISABLE D-BUS H
WCSH CSR 04 H
S1
S2
S3
S4
DAPB COMPAT MODE H
DAPF DT CLASS 1 H
DAPF DT CLASS 0 H
OPCODE REG
8 D FF
74S374
E51
BUS IB D07 H
BUS IB D06 H
BUS IB D05 H
BUS IB D04 H
BUS IB D03 H
BUS IB D02 H
BUS IB D01 H
BUS IB D00 H
D7
D6
D5
D4
D3
D2
D1
D0
R7
R6
R5
R4
R3
R2
R1
R0
EN OUT
CLK
A02
AD2
AT2
BA1
BP1
BR2
CP1
CS1
74S04
E67
WCSH CSR 08 H
DAPB COMPAT MODE H
74S02
E70
DAPF ENABLE IB STALL L
DAPB CLOCK REGS H
DAPB IRD STATE L
BRANCH COND,
CC CLASS
PAL 16R4
006K3
E72
DAPH PSL N H
DAPH PSL Z H
DAPH PSL V H
DAPH PSL C H
DAPF OPC TYPE 1 H
DAPF OPC TYPE 0 H
DAPF REGISTER MODE H
DAPF BRANCH FALSE L
DAPH RMODE A L
DAPH RMODE B L
CLOCK
ENABLE
IB,IR CONTROL
PAL 16R6
001K4
E69
DAPA MREQ IBFILL L
BUS Y D01 H
BUS Y D00 H
DAPA DECODE INSTR H
WCSH CSR 08 H
WCSE CPU P2 H
DV2 MCTK LOAD IB H
DAPH DATA REQ L
DF1 WCSE CLOCK P2 L
DAPB BASIC CLOCK H
DAPF IB VALID L
DAPF PC EQUALS 3 H
DAPF STALL ON IB H
WCSH CSR 07 H
DAPF DATA RCVD H
DU2
DAPB CPU P2 L
DECODER
74S139
E48
0F
1F
2F
3F
SEL
EN
DAPF ENABLE IB 1 L
DAPF ENABLE IB 0 L
DAPF ENABLE IB 3 L
DAPF ENABLE IB 2 L
DAPF ENABLE IB STALL L
(BUS NAD & BUS IB CTL)
THIS DRAWING AND SPECIFICATIONS, ARE THE PROPERTY OF DIGITAL EQUIPMENT CORPORATION AND SHALL NOT BE REPRODUCED OR COPIED OR USED IN WHOLE OR IN PART AS THE BASIS FOR THE MANUFACTURE OR SALE OF ITEMS WITHOUT WRITTEN PERMISSION. COPYRIGHT © 1981 DIGITAL EQUIPMENT CORPORATION.
REVISIONS
CHK
CHANGE NO.
REV
digital
DRN: J.M.Hafner
CHK'D.
DATE 27-OCT-81
ENG.
DATE
BOARD LOCATION:
SHEET 1 OF 1
(367,1500)DAPF.DRW 27-OCT-81 10:51
NEXT HIGHER ASSEMBLY:
FIRST USED ON OPTION/MODEL: 11/730
TITLE: NEBULA CPU & DATA PATH (DAPF)
SIZE D
CODE CS
NUMBER M8390-0-DAPF
REV. B
G.M. HAFNER (1186,1500)DAPF.DPL, SCALE 2, "D" RELEASE BOOK
G.M. HAFNER DAPF.PLOT 1186,1500) 27-OCT-81 11:27

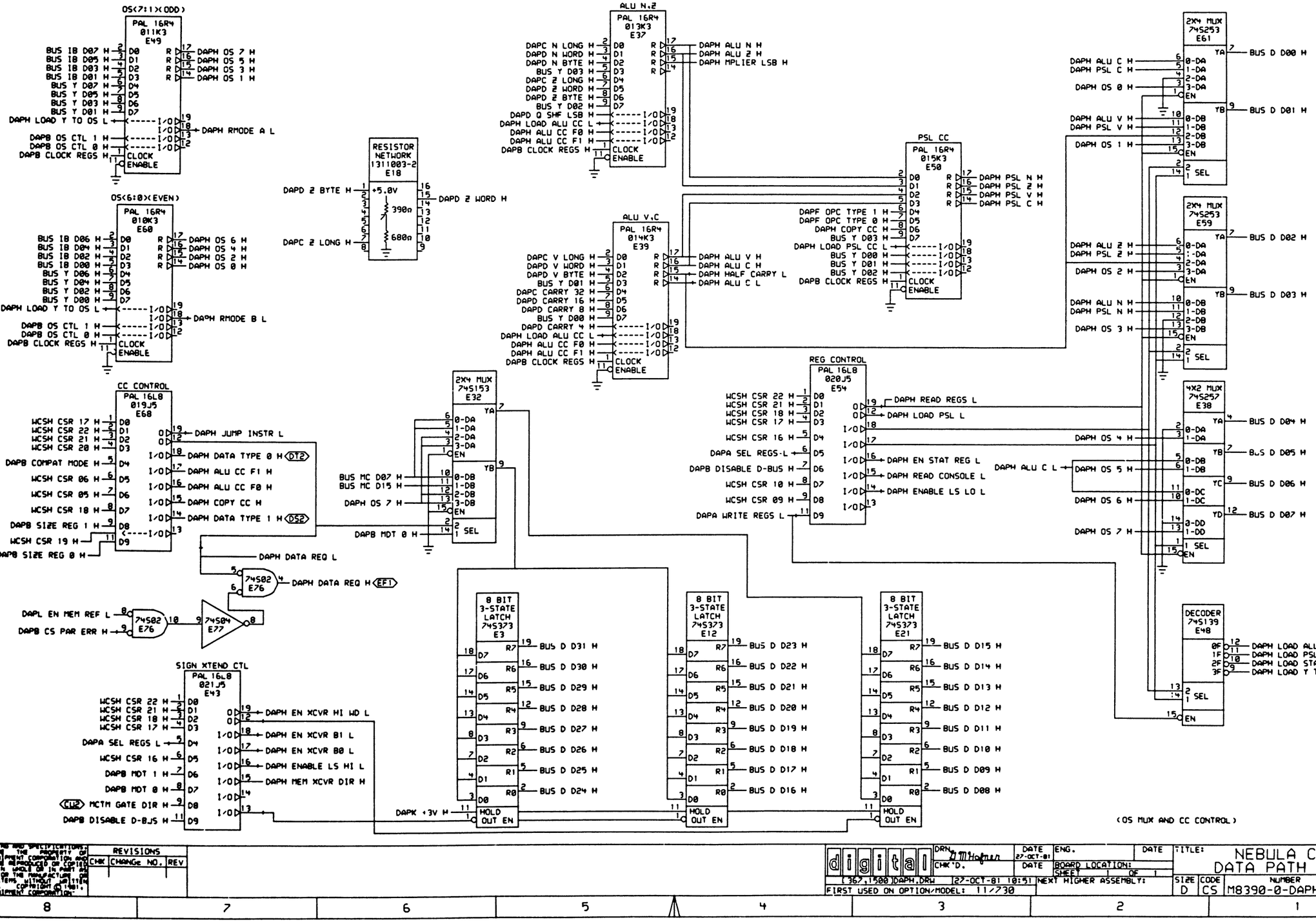
OS<7:1>(ODD)
PAL 16R4 011K3 E49
BUS IB D07 H
BUS IB D05 H
BUS IB D03 H
BUS IB D01 H
BUS Y D07 H
BUS Y D05 H
BUS Y D03 H
BUS Y D01 H
DAPH LOAD Y TO OS L
DAPB OS CTL 1 H
DAPB OS CTL 0 H
DAPB CLOCK REGS H
DAPH OS 7 H
DAPH OS 5 H
DAPH OS 3 H
DAPH OS 1 H
DAPH RMODE A L
OS<6:0>(EVEN)
PAL 16R4 010K3 E60
BUS IB D06 H
BUS IB D04 H
BUS IB D02 H
BUS IB D00 H
BUS Y D06 H
BUS Y D04 H
BUS Y D02 H
BUS Y D00 H
DAPH LOAD Y TO OS L
DAPB OS CTL 1 H
DAPB OS CTL 0 H
DAPB CLOCK REGS H
DAPH OS 6 H
DAPH OS 4 H
DAPH OS 2 H
DAPH OS 0 H
DAPH RMODE B L
CC CONTROL
PAL 16L8 019J5 E68
WCSH CSR 17 H
WCSH CSR 22 H
WCSH CSR 21 H
WCSH CSR 20 H
DAPB COMPAT MODE H
WCSH CSR 06 H
WCSH CSR 05 H
WCSH CSR 18 H
DAPB SIZE REG 1 H
WCSH CSR 19 H
DAPB SIZE REG 0 H
DAPH JUMP INSTR L
DAPH DATA TYPE 0 H
DAPH ALU CC F1 H
DAPH ALU CC F0 H
DAPH COPY CC H
DAPH DATA TYPE 1 H
RESISTOR NETWORK 1311003-2 E18
DAPD 2 BYTE H
DAPC 2 LONG H
+5.0V
390Ω
680Ω
DAPD 2 WORD H
2X4 MUX 74S153 E32
BUS MC D07 H
BUS MC D15 H
DAPH OS 7 H
DAPB MDT 0 H
BUS MC D06 H
BUS MC D14 H
DAPH OS 6 H
DAPB MDT 1 H
BUS MC D05 H
BUS MC D13 H
DAPH OS 5 H
BUS MC D04 H
BUS MC D12 H
DAPH OS 4 H
DAPH DATA REQ L
74S02 E76
DAPH DATA REQ H (EF1)
DAPL EN MEM REF L
DAPB CS PAR ERR H
74S04 E77
SIGN XTEND CTL
PAL 16L8 021J5 E43
WCSH CSR 22 H
WCSH CSR 21 H
WCSH CSR 18 H
WCSH CSR 17 H
DAPA SEL REGS L
WCSH CSR 16 H
DAPB MDT 1 H
DAPB MDT 0 H
(CU2) MCTM GATE DIR H
DAPB DISABLE D-BUS H
DAPH EN XCVR HI WD L
DAPH EN XCVR B1 L
DAPH EN XCVR B0 L
DAPH ENABLE LS HI L
DAPH MEM XCVR DIR H
ALU N,Z
PAL 16R4 013K3 E37
DAPC N LONG H
DAPD N WORD H
DAPD N BYTE H
BUS Y D03 H
DAPC 2 LONG H
DAPD 2 WORD H
DAPD 2 BYTE H
BUS Y D02 H
DAPD Q SHF LSB H
DAPH LOAD ALU CC L
DAPH ALU CC F0 H
DAPH ALU CC F1 H
DAPB CLOCK REGS H
DAPH ALU N H
DAPH ALU Z H
DAPH MPLIER LSB H
ALU V,C
PAL 16R4 014K3 E39
DAPC V LONG H
DAPD V WORD H
DAPD V BYTE H
BUS Y D01 H
DAPC CARRY 32 H
DAPD CARRY 16 H
DAPD CARRY 8 H
BUS Y D00 H
DAPD CARRY 4 H
DAPH LOAD ALU CC L
DAPH ALU CC F0 H
DAPH ALU CC F1 H
DAPB CLOCK REGS H
DAPH ALU V H
DAPH ALU C H
DAPH HALF CARRY L
DAPH ALU C L
PSL CC
PAL 16R4 015K3 E50
DAPF OPC TYPE 1 H
DAPF OPC TYPE 0 H
DAPH COPY CC H
BUS Y D03 H
DAPH LOAD PSL CC L
BUS Y D00 H
BUS Y D01 H
BUS Y D02 H
DAPB CLOCK REGS H
DAPH PSL N H
DAPH PSL Z H
DAPH PSL V H
DAPH PSL C H
REG CONTROL
PAL 16L8 020J5 E54
WCSH CSR 22 H
WCSH CSR 21 H
WCSH CSR 18 H
WCSH CSR 17 H
WCSH CSR 16 H
DAPA SEL REGS-L
DAPB DISABLE D-BUS H
WCSH CSR 10 H
WCSH CSR 09 H
DAPA WRITE REGS L
DAPH READ REGS L
DAPH LOAD PSL L
DAPH EN STAT REG L
DAPH READ CONSOLE L
DAPH ENABLE LS LO L
8 BIT 3-STATE LATCH 74S373 E3
8 BIT 3-STATE LATCH 74S373 E12
8 BIT 3-STATE LATCH 74S373 E21
HOLD OUT EN
DAPH +3V H
BUS D D31 H
BUS D D30 H
BUS D D29 H
BUS D D28 H
BUS D D27 H
BUS D D26 H
BUS D D25 H
BUS D D24 H
BUS D D23 H
BUS D D22 H
BUS D D21 H
BUS D D20 H
BUS D D19 H
BUS D D18 H
BUS D D17 H
BUS D D16 H
BUS D D15 H
BUS D D14 H
BUS D D13 H
BUS D D12 H
BUS D D11 H
BUS D D10 H
BUS D D09 H
BUS D D08 H
2X4 MUX 74S253 E61
2X4 MUX 74S253 E59
4X2 MUX 74S257 E38
DAPH ALU C H
DAPH PSL C H
DAPH OS 0 H
DAPH ALU V H
DAPH PSL V H
DAPH OS 1 H
DAPH ALU Z H
DAPH PSL Z H
DAPH OS 2 H
DAPH ALU N H
DAPH PSL N H
DAPH OS 3 H
DAPH OS 4 H
DAPH ALU C L
DAPH OS 5 H
DAPH OS 6 H
DAPH OS 7 H
BUS D D00 H
BUS D D01 H
BUS D D02 H
BUS D D03 H
BUS D D04 H
BUS D D05 H
BUS D D06 H
BUS D D07 H
DECODER 74S139 E48
0F
1F
2F
3F
DAPH LOAD ALU CC L
DAPH LOAD PSL CC L
DAPH LOAD STAT L
DAPH LOAD Y TO OS L
(OS MUX AND CC CONTROL)
REVISIONS
CHK
CHANGE NO.
REV
digital
DRN
CHK'D.
DATE
27-OCT-81
ENG.
DATE
BOARD LOCATION:
SHEET 1 OF 1
[367,1500]DAPH.DRW 27-OCT-81 10:51
NEXT HIGHER ASSEMBLY:
FIRST USED ON OPTION/MODEL: 11/730
TITLE:
NEBULA CPU & DATA PATH (DAPH)
SIZE D
CODE CS
NUMBER M8390-0-DAPH
REV. B

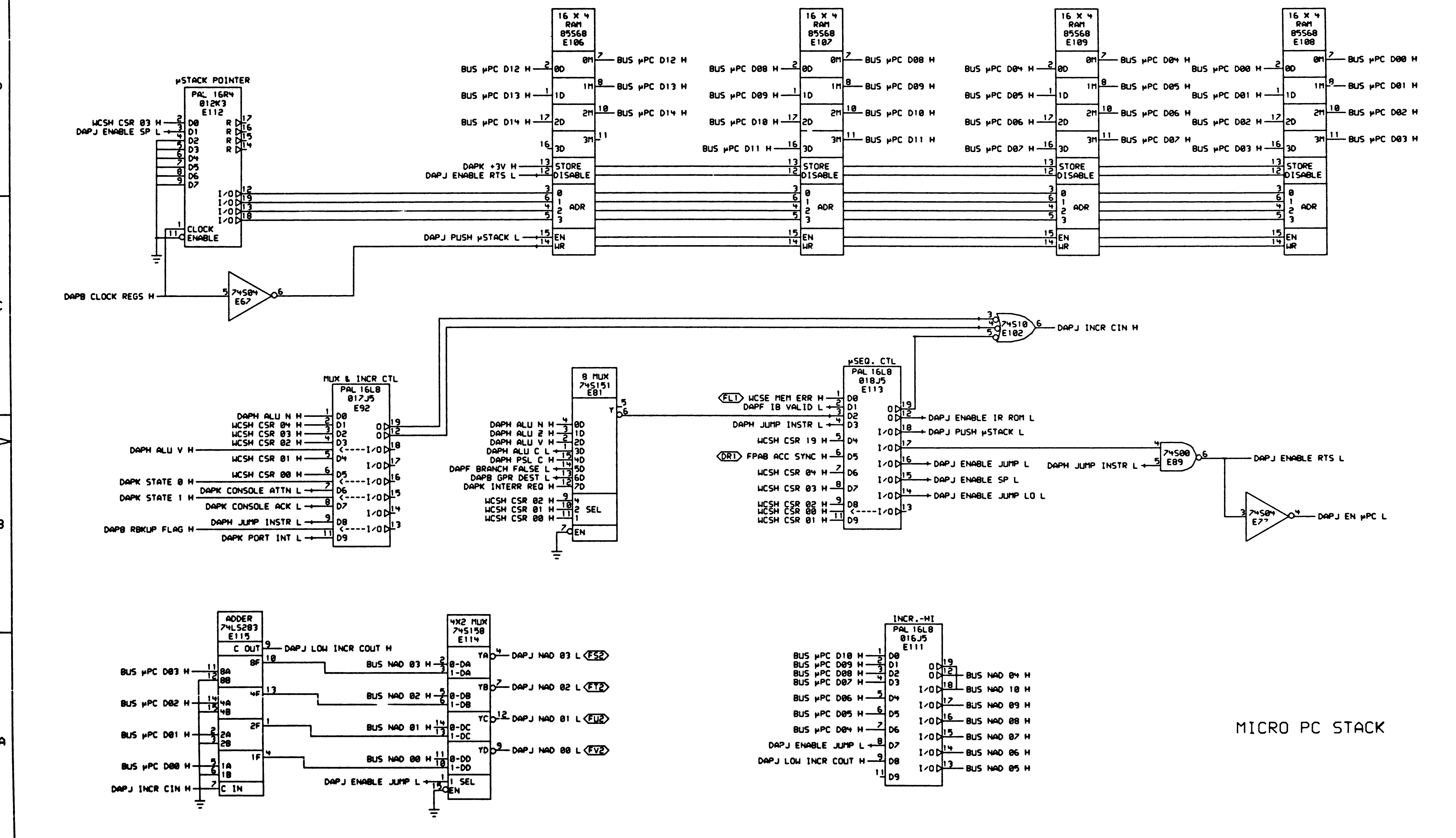

MICRO PC STACK

THIS DRAWING AND SPECIFICATIONS, HEREIN, ARE THE PROPERTY OF DIGITAL EQUIPMENT CORPORATION AND SHALL NOT BE REPRODUCED OR COPIED OR USED IN WHOLE OR IN PART AS THE BASIS FOR THE MANUFACTURE OR SALE OF ITEMS WITHOUT WRITTEN PERMISSION. COPYRIGHT © 1981, DIGITAL EQUIPMENT CORPORATION

REVISIONS		
CHK	CHANGE NO.	REV

digital

DRN. D M Hofner	DATE 27-OCT-81	ENG.	DATE	TITLE: NEBULA CPU & DATA PATH (DAPJ)			
CHK'D.	DATE	BOARD LOCATION: SHEET 1 OF 1					
(367,1500)DAPJ.DRW	27-OCT-81 10:51	NEXT HIGHER ASSEMBLY:		SIZE D	CODE CS	NUMBER M8390-0-DAPJ	REV. B
FIRST USED ON OPTION/MODEL: 11/730							

G.M. HAFNER, [1106,1500]DAPJ.DPL, SCALE 2, "D" RELEASE BOX
G.M. HAFNER DAPJ.PLO[1106,1500] 27-OCT-81 11:28

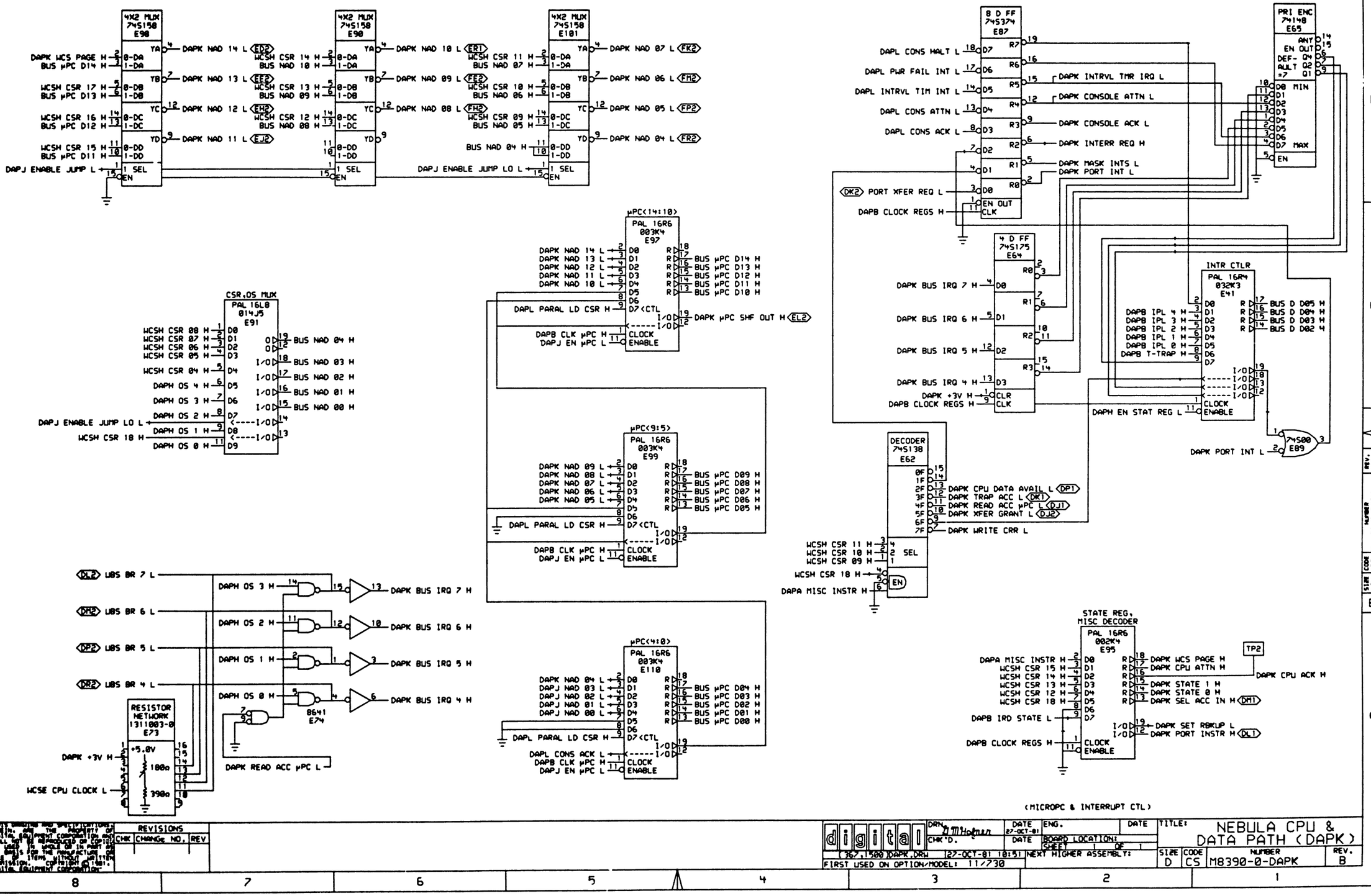
4X2 MUX 74S158 E98
DAPK WCS PAGE H
BUS μPC D14 H
WCSH CSR 17 H
BUS μPC D13 H
WCSH CSR 16 H
BUS μPC D12 H
WCSH CSR 15 H
BUS μPC D11 H
DAPJ ENABLE JUMP L
DAPK NAD 14 L (ED2)
DAPK NAD 13 L (EE2)
DAPK NAD 12 L (EH2)
DAPK NAD 11 L (EJ2)
4X2 MUX 74S158 E90
WCSH CSR 14 H
BUS NAD 10 H
WCSH CSR 13 H
BUS NAD 09 H
WCSH CSR 12 H
BUS NAD 08 H
DAPK NAD 10 L (ER1)
DAPK NAD 09 L (FE2)
DAPK NAD 08 L (FH2)
4X2 MUX 74S158 E101
WCSH CSR 11 H
BUS NAD 07 H
WCSH CSR 10 H
BUS NAD 06 H
WCSH CSR 09 H
BUS NAD 05 H
BUS NAD 04 H
DAPJ ENABLE JUMP LO L
DAPK NAD 07 L (FK2)
DAPK NAD 06 L (FM2)
DAPK NAD 05 L (FP2)
DAPK NAD 04 L (FR2)
8 D FF 74S374 E87
DAPL CONS HALT L
DAPL PWR FAIL INT L
DAPL INTRVL TIM INT L
DAPL CONS ATTN L
DAPL CONS ACK L
(DK2) PORT XFER REQ L
DAPB CLOCK REGS H
DAPK INTRVL TMR IRQ L
DAPK CONSOLE ATTN L
DAPK CONSOLE ACK L
DAPK INTERR REQ H
DAPK MASK INTS L
DAPK PORT INT L
PRI ENC 74148 E65
ANY
EN OUT
DEF- Q4
AULT Q2
=7 Q1
D0 MIN
D1
D2
D3
D4
D5
D6
D7 MAX
EN
μPC(14:10)
PAL 16R6 003K4 E97
DAPK NAD 14 L
DAPK NAD 13 L
DAPK NAD 12 L
DAPK NAD 11 L
DAPK NAD 10 L
DAPL PARAL LD CSR H
DAPB CLK μPC H
DAPJ EN μPC L
BUS μPC D14 H
BUS μPC D13 H
BUS μPC D12 H
BUS μPC D11 H
BUS μPC D10 H
DAPK μPC SHF OUT H (EL2)
4 D FF 74S175 E64
DAPK BUS IRQ 7 H
DAPK BUS IRQ 6 H
DAPK BUS IRQ 5 H
DAPK BUS IRQ 4 H
DAPK +3V H
DAPB CLOCK REGS H
INTR CTLR PAL 16R4 032K3 E41
DAPB IPL 4 H
DAPB IPL 3 H
DAPB IPL 2 H
DAPB IPL 1 H
DAPB IPL 0 H
DAPB T-TRAP H
BUS D D05 H
BUS D D04 H
BUS D D03 H
BUS D D02 H
DAPH EN STAT REG L
CLOCK ENABLE
74S00 E89
DAPK PORT INT L
CSR,OS MUX PAL 16L8 014J5 E91
WCSH CSR 08 H
WCSH CSR 07 H
WCSH CSR 06 H
WCSH CSR 05 H
WCSH CSR 04 H
DAPH OS 4 H
DAPH OS 3 H
DAPH OS 2 H
DAPJ ENABLE JUMP LO L
DAPH OS 1 H
WCSH CSR 18 H
DAPH OS 0 H
BUS NAD 04 H
BUS NAD 03 H
BUS NAD 02 H
BUS NAD 01 H
BUS NAD 00 H
μPC(9:5)
PAL 16R6 003K4 E99
DAPK NAD 09 L
DAPK NAD 08 L
DAPK NAD 07 L
DAPK NAD 06 L
DAPK NAD 05 L
DAPL PARAL LD CSR H
DAPB CLK μPC H
DAPJ EN μPC L
BUS μPC D09 H
BUS μPC D08 H
BUS μPC D07 H
BUS μPC D06 H
BUS μPC D05 H
DECODER 74S138 E62
0F
1F
2F
3F
4F
5F
6F
7F
DAPK CPU DATA AVAIL L (DP1)
DAPK TRAP ACC L (DK1)
DAPK READ ACC μPC L (DJ1)
DAPK XFER GRANT L (DJ2)
DAPK WRITE CRR L
WCSH CSR 11 H
WCSH CSR 10 H
WCSH CSR 09 H
WCSH CSR 18 H
DAPA MISC INSTR H
SEL
EN
μPC(4:0)
PAL 16R6 003K4 E110
DAPK NAD 04 L
DAPJ NAD 03 L
DAPJ NAD 02 L
DAPJ NAD 01 L
DAPJ NAD 00 L
DAPL CONS ACK L
BUS μPC D04 H
BUS μPC D03 H
BUS μPC D02 H
BUS μPC D01 H
BUS μPC D00 H
STATE REG, MISC DECODER PAL 16R6 002K4 E95
DAPA MISC INSTR H
WCSH CSR 15 H
WCSH CSR 14 H
WCSH CSR 13 H
WCSH CSR 12 H
WCSH CSR 18 H
DAPB IRD STATE L
DAPB CLOCK REGS H
DAPK WCS PAGE H
DAPK CPU ATTN H
DAPK STATE 1 H
DAPK STATE 0 H
DAPK SEL ACC IN H (DM1)
DAPK SET RBKUP L
DAPK PORT INSTR H (DL1)
TP2
DAPK CPU ACK H
(DL2) LBS BR 7 L
(DM2) LBS BR 6 L
(DP2) LBS BR 5 L
(DR2) LBS BR 4 L
DAPH OS 3 H
DAPH OS 2 H
DAPH OS 1 H
DAPH OS 0 H
8641 E74
DAPK BUS IRQ 7 H
DAPK BUS IRQ 6 H
DAPK BUS IRQ 5 H
DAPK BUS IRQ 4 H
DAPK READ ACC μPC L
RESISTOR NETWORK 1311003-0 E73
+5.0V
DAPK +3V H
180Ω
390Ω
WCSE CPU CLOCK L
(MICROPC & INTERRUPT CTL)
REVISIONS
CHK
CHANGE NO.
REV
digital
DRN. J.M.Holmes
CHK'D.
DATE 27-OCT-81
ENG.
DATE
BOARD LOCATION:
SHEET 1 OF 1
TITLE: NEBULA CPU & DATA PATH (DAPK)
SIZE D
CODE CS
NUMBER M8390-0-DAPK
REV. B
FIRST USED ON OPTION/MODEL: 11/730
NEXT HIGHER ASSEMBLY:
(367,500)DAPK.DRW 27-OCT-81 10:51
G.M. HANSER DAPK.PLT;1(1196,1968)DAPK.LMT, SCALE 2.0 RELEASED 27-OCT-81 11:25

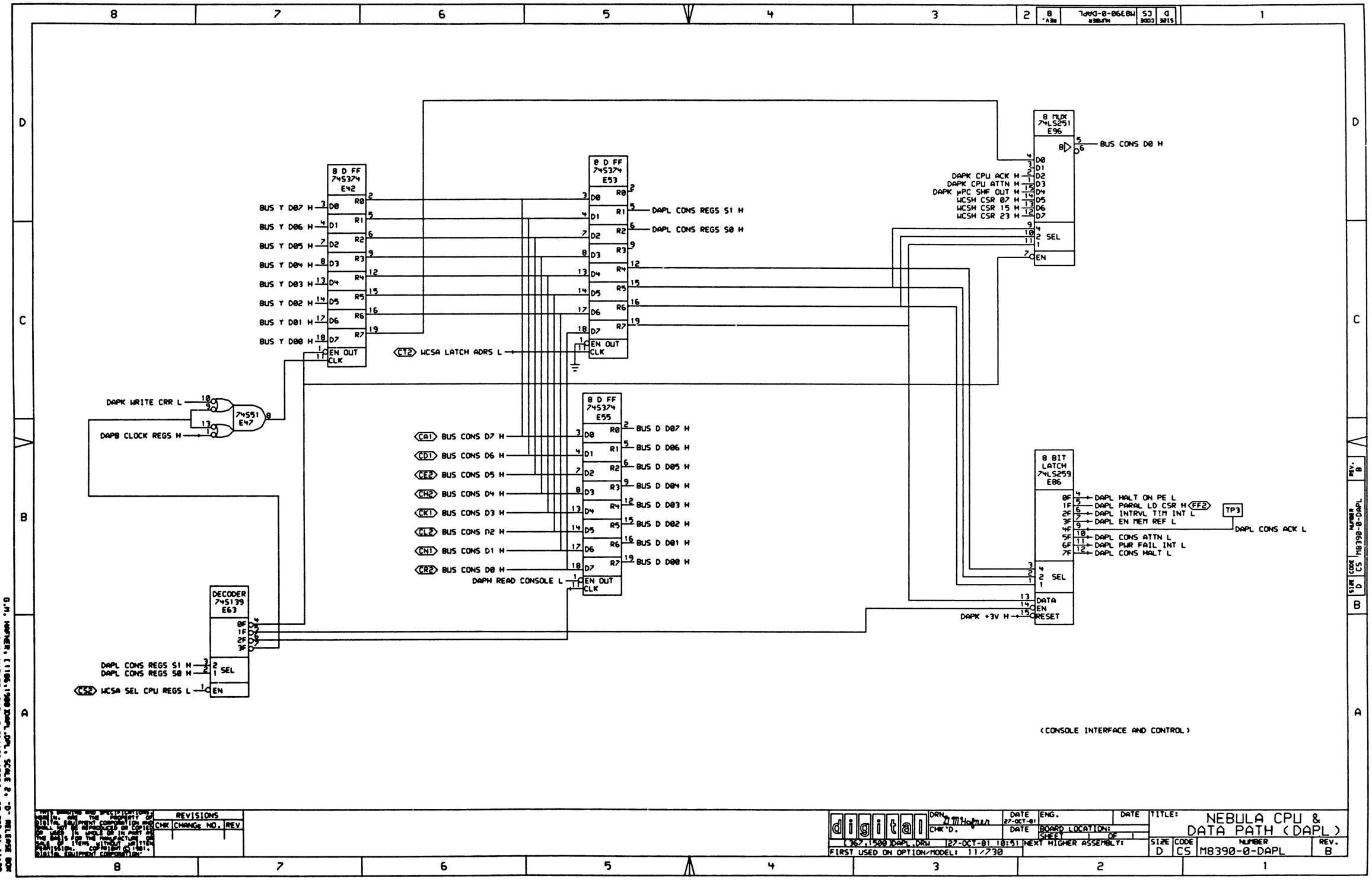

G.M. HOFFNER, [1106,1500]DAPL.DPL, SCALE 2, "D" RELEASE BOM
G.M. HOFFNER DAPL.PLO[1106,1500] 27-OCT-81 11:43

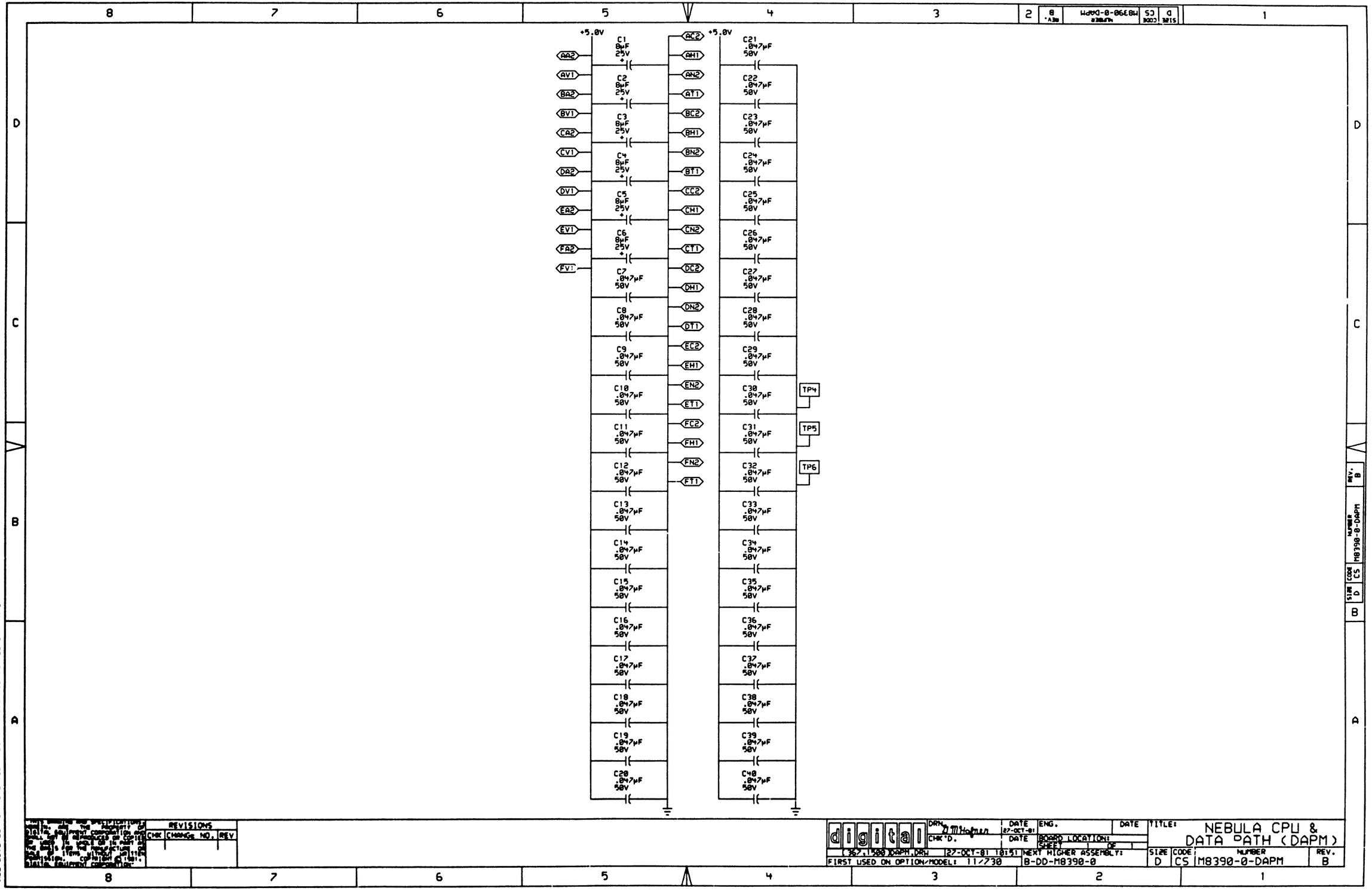

REVISIONS		
CHK	CHANGE NO.	REV

digital	DRN. D.M. Hafner	DATE 27-OCT-81	ENG.
	CHK'D.	DATE	BOARD LOCATION: SHEET 1 OF 1
(367,1500) DAPM.DRW	27-OCT-81 10:51	NEXT HIGHER ASSEMBLY:	
FIRST USED ON OPTION/MODEL: 11/730		B-DD-M8390-0	

TITLE: NEBULA CPU & DATA PATH (DAPM)

SIZE	CODE	NUMBER	REV.
D	CS	M8390-0-DAPM	B

THIS DRAWING AND SPECIFICATIONS, HEREIN, ARE THE PROPERTY OF DIGITAL EQUIPMENT CORPORATION AND SHALL NOT BE REPRODUCED OR COPIED OR USED IN WHOLE OR IN PART AS THE BASIS FOR THE MANUFACTURE OR SALE OF ITEMS WITHOUT WRITTEN PERMISSION. COPYRIGHT © 1981, DIGITAL EQUIPMENT CORPORATION.

G.M. HAFNER, [1186,1500]DAPM.DPL, SCALE 2, -D- RELEASE 00X
G.M. HAFNER DAPM.PLC[1186,1500] 27-OCT-81 11:29

```
PART NUMBER: 23-012J5-00
DEVICE TYPE: PAL16L8 ;
SCHEMATIC SHEET #:D-CS-M8390-0-DAPA
LOCATION/DESCRIPTION: : E79/ LOCAL STORE CONTROL
ASSIGNED PIN NUMBER:

 1= CSR.22            8=/SEL.REGS          15= MISC.INSTR
 2= CSR.21            9= CSR.18            16=/WRT.REGS
 3= CSR.20           10= GND               17= MOT.C0
 4= CSR.19           11= CSR.17            18= MOT.C1
 5= CSR.08           12=/WRT.LS<7-0>       19= DECODE.INSTR
 6= DT.1             13=/WRT.LS<15-8>      20= VCC
 7= DT.0             14=/WRT.LS<31-16>

 EQUATIONS:

  IF(VCC) WRT.LS<7--0>:=/SEL.REGS*CSR.22*CSR.21
         +/SEL.REGS**/CSR.22*CSR.21*CSR.20*CSR.19
         +/CSR.22*/CSR.21*/CSR.20*/CSR.19*CSR.08
         +/SEL.REGS**/CSR.22*CSR.21*CSR.20*/CSR.19
           */CSR.18**/CSR.17

  IF(VCC) WRT.LS<15--8>:=/SEL.REGS*CSR.22*CSR.21*DT.0
       +/SEL.REGS*/CSR.22*CSR.21*CSR.20*CSR.19*DT.0
       +/CSR.22*/CSR.21*/CSR.20*/CSR.19*CSR.08
       +/SEL.REGS*/CSR.22*CSR.21*CSR.20*/CSR.19
           */CSR.18**/CSR.17*DT.0

  IF(VCC) WRT.LS<31--16>:=/SEL.REGS*CSR.22*CSR.21*DT.1
       +/SEL.REGS*/CSR.22*CSR.21*CSR.20*CSR.19*DT.1
       +/CSR.22*/CSR.21*/CSR.20*/CSR.19*CSR.08
       +/SEL.REGS*/CSR.22*CSR.21*CSR.20*/CSR.19
           */CSR.18**/CSR.17*DT.1

  IF(VCC) /MISC.INSTR:=CSR.22
         +CSR.21
         +/CSR.20
         +CSR.15

  IF(VCC) WRT.REGS:=SEL.REGS*CSR.22*CSR.21
         +SEL.REGS*/CSR.22*CSR.21*CSR.20*CSR.19
         +SEL.REGS*/CSR.22*CSR.21*CSR.20*/CSR.19
           */CSR.18**/CSR.17

  IF(VCC) /MOT.C0:=//CSR.22*/CSR.21*CSR.20*CSR.19*/DT.1*/DT.0
         +/CSR.22*/CSR.21*CSR.20*CSR.19*DT.1

  IF(VCC) /MOT.C1:=//CSR.22*/CSR.21*CSR.20*CSR.19*/DT.1

  IF(VCC) /DECODE.INSTR:=CSR.22
          +CSR 21
          +CSR.20
```

```
PART NUMBER: 23-013J5-00
DEVICE TYPE: PAL16L8
SCHEMATIC SHEET #:D-CS-M8390-0-DAPA
LOCATION/DESCRIPTION: E45/ A,B ADDRESS GENERATOR
ASSIGNED PIN NUMBER:

 1= CSR.22            8= CSR.10            15= B.ADRS.0
 2= CSR.21            9= CSR.09            16= B.ADRS.1
 3= CSR.20           10= GND               17= B.ADRS.2
 4= CSR.19           11= CSR.08            18= A.ADRS.0
 5= CSR.18           12=/MREQ.IBFILL       19= A.ADRS.1
 6= CSR.17           13= CSR.07            20= VCC
 7= CSR.16           14=/ENABLE.Y-BUS

 EQUATIONS:

  IF(VCC) MREQ.IBFILL:=/CSR.22*/CSR.21*CSR.20*CSR.19*/CSR.18*CSR.17
            *CSR.16*CSR.08*/CSR.07

  IF(VCC) ENABLE.Y-BUS:=CSR.22
            +/CSR.21
            +/CSR.20
            +/CSR.19
            +CSR.18
            +/CSR.17

  IF(VCC) /B.ADRS.0:=CSR.22*/CSR.07
            +CSR.21*/CSR.07
            +/CSR.20*/CSR.07
            +/CSR.19*/CSR.07
            +/CSR.22*/CSR.21*/CSR.20*/CSR.19

  IF(VCC) /B.ADRS.1:=/CSR.09
            +/CSR.22*/CSR.21

  IF(VCC) /B.ADRS.2:=CSR.22
            +CSR.21*/CSR.20
            +/CSR.22*CSR.21*CSR.20*CSR.19
            +/CSR.22*CSR.21*CSR.20*/CSR.18
            +/CSR.22*CSR.21*CSR.20*CSR.17
            +/CSR.20*/CSR.09
            +/CSR.22*/CSR.21*CSR.20*/CSR.19

  IF(VCC) /A.ADRS.0:=/CSR.22*CSR.21*/CSR.20*/CSR.09
            +CSR.22*/CSR.07
            +/CSR.21*/CSR.07
            +CSR.20*/CSR.07

  IF(VCC) /A.ADRS.1:=/CSR.22*CSR.21*/CSR.20*/CSR.10
            +CSR.22*/CSR.08
            +/CSR.21*/CSR.08
            +CSR.20*/CSR.08
```

```
PART NUMBER: 23-014J5-00
DEVICE TYPE: PAL16L8
SCHEMATIC SHEET #:D-CS-M8390-0-DAPK
LOCATION/DESCRIPTION: E91/ CSR , OS MUX
ASSIGNED PIN NUMBER:

 1= CSR.08            8= OS.2              15= NAD.00
 2= CSR.07            9= OS.1              16= NAD.01
 3= CSR.06           10= GND               17= NAD.02
 4= CSR.05           11= OS.0              18= NAD.03
 5= CSR.04           12= NC                19= NAD.04
 6= OS.4             13= CSR.18            20= VCC
 7= OS.3             14=/ENABLE.JUMP.LO

 EQUATIONS:

  IF[ENABLE.JUMP.LO] /NAD.00:=/CSR.04*/CSR.18
                    +/CSR.04*/OS.0

  IF[ENABLE.JUMP.LO] /NAD.01:=/CSR.05*/CSR.18
                            +/CSR.05*/OS.1

  IF[ENABLE.JUMP.LO] /NAD.02:=/CSR.06*/CSR.18
                            +/CSR.06*/OS.2

  IF[ENABLE.JUMP.LO] /NAD.03:=/CSR.07*/CSR.18
                            +/CSR.07*/OS.3

  IF[ENABLE.JUMP.LO] /NAD.04:=/CSR.08*/CSR.18
                            +/CSR.08*/OS.4
```

23-012J5-00
23-013J5-00
23-014J5-00

THIS DRAWING AND SPECIFICATIONS, HEREIN, ARE THE PROPERTY OF DIGITAL EQUIPMENT CORPORATION AND SHALL NOT BE REPRODUCED OR COPIED OR USED IN WHOLE OR IN PART AS THE BASIS FOR THE MANUFACTURE OR SALE OF ITEMS WITHOUT WRITTEN PERMISSION. COPYRIGHT © 1981, DIGITAL EQUIPMENT CORPORATION

REVISIONS		
CHK	CHANGE NO.	REV

digital	DRN. J McHafner	DATE 11-SEP-81	ENG.	DATE
	CHK'D.	DATE	BOARD LOCATION: SHEET 01 OF 14	
DSK:GLDP01.T[2P[367,1330]]11-SEP-81 15:23	NEXT HIGHER ASSEMBLY:			
FIRST USED ON OPTION/MODEL: 11/730	B-DD-M8390-0-0			

TITLE: DATA PATH ROM AND PAL LISTINGS

SIZE	CODE	NUMBER	REV.
D	GL	M8390-0-0	A

PART NUMBER: 23-016J5-00

DEVICE TYPE: PAL16L8

SCHEMATIC SHEET 8:D-CS-M8390-0-0APJ

LOCATION/DESCRIPTION: E111/ MICRO ADDRESS (10:04) INCREMENTER

ASSIGNED PIN NUMBER:

1= UPC.10	8=/ENABLE.JUMP	15= NAO.07
2= UPC.09	9= CARRY.IN	16= NAO.08
3= UPC.08	10= GND	17= NAO.09
4= UPC.07	11=.NC	18= NAO.10.A
5= UPC.06	12= NAO.04	19= NAO.10.B
6= UPC.05	13= NAO.05	20= VCC
7= UPC.04	14= NAO.06	

EQUATIONS:

```
IF(/ENABLE.JUMP) /NAO.04:=/UPC.04*CARRY.IN
      +/UPC.10*/CARRY.IN

IF(/ENABLE.JUMP) /NAO.05:=UPC.05*UPC.04*CARRY.IN
      +/UPC.05*/UPC.04
      +/UPC.05*/CARRY.IN

IF(/ENABLE.JUMP) /NAO.06:=UPC.06*UPC.05*UPC.04*CARRY.IN
      +/UPC.06*/UPC.05
      +/UPC.05*/UPC.04
      +/UPC.06*/CARRY.IN

IF(/ENABLE.JUMP) /NAO.07:=UPC.07*UPC.06*UPC.05*UPC.04*CARRY.IN
      +/UPC.07*/UPC.06
      +/UPC.07*/UPC.05
      +/UPC.07*/UPC.04
      +/UPC.07*/CARRY.IN

IF(/ENABLE.JUMP) /NAO.08:=UPC.08*UPC.07*UPC.06*UPC.05*UPC.04
        *CARRY.IN
      +/UPC.08*/UPC.07
      +/UPC.08*/UPC.06
      +/UPC.08*/UPC.05
      +/UPC.08*/UPC.04
      +/UPC.08*/CARRY.IN

IF(/ENABLE.JUMP) /NAO.09:=/UPC.09*/CARRY.IN
      +/UPC.09*/UPC.08
      +/UPC.09*/UPC.07
      +/UPC.09*/UPC.06
      +/UPC.09*/UPC.05
      +/UPC.09*/UPC.04
      +UPC.09*UPC.08*UPC.07*UPC.06*UPC.05
        *UPC.04*CARRY.IN

IF(/ENABLE.JUMP*UPC.10) /NAO.10.A:=/CARRY.IN
      +/UPC.09
      +/UPC.08
      +/UPC.07
      +/UPC.06
      +/UPC.05
      +/UPC.04

IF(/ENABLE.JUMP*UPC.10) /NAO.10.B:=UPC.09*UPC.08*UPC.07*UPC.06
        *UPC.05*UPC.04*CARRY.IN
```

PART NUMBER: 23-018J5-00

DEVICE TYPE: PAL16L8

SCHEMATIC SHEET 8:D-CS-M8390-0-0APJ

LOCATION/DESCRIPTION: E113/ MICRO SEQUENCER CONTROL

ASSIGNED PIN NUMBER:

1= ERR.SUM	8= CSR.03	15=/ENABLE.SP
2=/I8.VALID	9= CSR.02	16=/ENABLE.JUMP
3=/MUX.IN	10= GND	17=/ENABLE.UPC
4=/JUMP.INSTR	11= CSR.01	18=/PUSH.USTACK
5= CSR.19	12=/ENABLE.IR.ROM	19=/OR.OUT.2
6= SYNC	13= CSR.00	20= VCC
7= CSR.04	14=/ENABLE.JUMP:LO	

EQUATIONS:

```
IF(VCC) ENABLE.IR.ROM:=JUMP.INSTR*CSR.19*/CSR.03*/MUX.IN
      +JUMP.INSTR*/CSR.19*CSR.03*/CSR.02*MUX.IN
      +JUMP.INSTR*/CSR.19*CSR.02*/CSR.01*/CSR.00
      +JUMP.INSTR*/CSR.19*CSR.03*CSR.02*CSR.00*I8.VALID


IF(VCC) ENABLE.JUMP.LO:=JUMP.INSTR*CSR.19*/CSR.03*/MUX.IN
      +JUMP.INSTR*CSR.19*CSR.03*/CSR.02*MUX.IN
      +JUMP.INSTR*CSR.19*CSR.02*/CSR.01*/CSR.00
      +JUMP.INSTR*CSR.19*CSR.03*CSR.02*CSR.00*I8.VALID

IF(VCC) ENABLE.SP:=/JUMP.INSTR*CSR.04*/CSR.03*CSR.G*/CSR.00
      +/JUMP.INSTR*CSR.04*/CSR.03*CSR.02*/CSR.00
      +/JUMP.INSTR*CSR.04*/CSR.03*/CSR.02*/ERR.SUM
      +JUMP.INSTR*CSR.03*CSR.02*/CSR.01*/CSR.00
      +JUMP.INSTR*CSR.03*CSR.02*/CSR.01*CSR.00*I8.VALID
      +/JUMP.INSTR*CSR.04*/CSR.03*/CSR.02*CSR.00*MUX.IN
      +/JUMP.INSTR*CSR.04*/CSR.03*CSR.02*CSR.01*CSR.00*SYNC

IF(VCC) ENABLE.JUMP:=JUMP.INSTR*/CSR.03*/MUX.IN
      +JUMP.INSTR*CSR.03*/CSR.02*MUX.IN
      +JUMP.INSTR*CSR.02*/CSR.01*/CSR.00
      +JUMP.INSTR*CSR.03*CSR.02*CSR.00*I8.VALID

IF(VCC) ENABLE.UPC:=/CSR.04
      +CSR.03
      +/CSR.02*/CSR.01*/CSR.00*ERR.SUM
      +CSR.02*MUX.IN
      +/CSR.02*CSR.01*/CSR.00
      +CSR.02*/CSR.01*CSR.00
      +CSR.02*CSR.01*CSR.00*SYNC

IF(VCC) PUSH.USTACK:=JUMP.INSTR*CSR.03*CSR.02*/CSR.01*/CSR.00
      +JUMP.INSTR*CSR.03*CSR.02*/CSR.01*CSR.00*I8.VALID

IF(VCC) OR.OUT.2:=/JUMP.INSTR*CSR.04*/CSR.03*CSR.02*/CSR.01*CSR.00*/ERR.SUM
      +JUMP.INSTR*CSR.03*CSR.02*CSR.01*/CSR.00*I8.VALID
      +/JUMP.INSTR*CSR.04*/CSR.02*CSR.01*CSR.00*SYNC
      +/JUMP.INSTR*/CSR.04*/CSR.03*/MUX.IN
      +/JUMP.INSTR*/CSR.04*CSR.03*/CSR.02*MUX.IN
      +/JUMP.INSTR*CSR.04*CSR.02*CSR.01*/CSR.00
      +/JUMP.INSTR*CSR.04*/CSR.03*/CSR.02*/CSR.01*/CSR.00
```

PART NUMBER: 23-019J5-00

DEVICE TYPE: PAL16L8

SCHEMATIC SHEET 8:D-CS-M8390-0-0APN

LOCATION/DESCRIPTION: E58/ CC CONTROL

ASSIGNED PIN NUMBER:

1= CSR.17	8= CSR.18	15= COPY.CC
2= CSR.22	9= SIZE.REG.1	16= ALU.CC.F0
3= CSR.21	10= GND	17= ALU.CC.F1
4= CSR.20	11= SIZE.REG.0	18= DT.0
5= COMPAT.MODE	12=/DATA.REQ	19=/JUMP.INSTR
6= CSR.06	13= CSR.19	20= VCC
7= CSR.05	14= DT.1	

EQUATIONS:

```
IF(VCC) DATA.REQ:=/CSR.22*CSR.21*CSR.20*/CSR.19*/CSR.18
      +/CSR.22*CSR.21*CSR.20*/CSR.18*/CSR.17


IF(VCC) /DT.1:=CSR.22*CSR.06*/SIZE.REG.1
      +CSR.21*CSR.06*/SIZE.REG.1
      +/CSR.22*/CSR.21*CSR.20*/CSR.06
      +/CSR.22*/CSR.21*CSR.20*CSR.06*/CSR.05*/SIZE.REG.1
      +COMPAT.MODE

IF(VCC) /COPY.CC:=/CSR.22*/CSR.21
      +/CSR.06
      +/CSR.05

IF(VCC) /ALU.CC.F0:=CSR.22*/CSR.06*CSR.05
      +CSR.21*/CSR.06*CSR.05
      +CSR.22*CSR.05*/CSR.05*/DT.1*/DT.0
      +CSR.21*CSR.05*/CSR.05*/DT.1*/DT.0
      +CSR.22*CSR.06*/CSR.05*DT.1
      +CSR.21*CSR.06*/CSR.05*DT.1

IF(VCC) /ALU.CC.F1:=CSR.22*CSR.06*/CSR.05*/DT.1
      +CSR.21*CSR.05*/CSR.05*/DT.1

IF(VCC) /DT.0:=CSR.22*CSR.06*/SIZE.REG.1*/SIZE.REG.0
      +CSR.21*CSR.06*/SIZE.REG.1*/SIZE.REG.0
      +/CSR.22*/CSR.21*CSR.20*/CSR.06*/CSR.05
      +/CSR.22*/CSR.21*CSR.20*CSR.06*/CSR.05*/SIZE.REG.1
        */SIZE.REG.0

IF(VCC) JUMP.INSTR:=/CSR.22*/CSR.21*/CSR.20
```

23-016J5-00
23-018J5-00
23-019J5-00

PART NUMBER: 23-020J5-00

DEVICE TYPE: PAL16L8

SCHEMATIC SHEET 8:D-CS-M8390-0-0APH

LOCATION/DESCRIPTION: E59/ REGISTER CONTROL

ASSIGNED PIN NUMBER:

1= CSR.22	8= CSR.10	15=/READ.CONSOLE
2= CSR.21	9= CSR.09	16=/EN.STAT.REG
3= CSR.18	10= GND	17= S.0
4= CSR.17	11=/WRITE.REGS	18= S.1
5= CSR.16	12=/LOAD.PSL	19=/READ.REGS
6=/SEL.REGS	13= NC	20= VCC
7= DISABL.D-BUS	14=/ENABLE.LS.LO	

EQUATIONS:

```
IF(VCC] LOAD.PSL:=/CSR.22*CSR.21*CSR.16*WRITE.REGS
        *SEL.REGS*CSR.18*CSR.09

IF(VCC] ENABLE.LS.LO:=CSR.22*/SEL.REGS*/DISABL.D-BUS
      +/CSR.22*/CSR.21*/DISABL.D-BUS
      +/CSR.22*CSR.21*/SEL.REGS*CSR.17*/DISABL.D-BUS

IF(VCC] READ.CONSOLE:=/CSR.22*CSR.21*CSR.16*SEL.REGS*/CSR.18
        */CSR.09*CSR.17*/DISABL.D-BUS

IF(VCC] EN.STAT.REG:=CSR.22*SEL.REGS*/DISABL.D-BUS*CSR.18*/CSR.09
      +/CSR.22*CSR.21*SEL.REGS*/DISABL.D-BUS*CSR.18
        */CSR.09*CSR.16*CSR.17

IF(VCC] /S.0:=CSR.22*/CSR.18*CSR.09
      +CSR.22*CSR.18*/CSR.09
      +/CSR.22*CSR.21*CSR.17*/CSR.18*CSR.09
      +/CSR.22*CSR.21*CSR.17*CSR.18*/CSR.09
      +/CSR.22*CSR.21*/CSR.18*CSR.18*CSR.09
      +/CSR.22*CSR.21*/CSR.18*CSR.18*CSR.09

IF(VCC] /S.1:=CSR.22*CSR.18*CSR.09
      +/CSR.22*CSR.21*CSR.17*CSR.18*CSR.09
      +/CSR.22*CSR.21*CSR.17*CSR.16
      +/CSR.22*CSR.21*/CSR.18*CSR.18*CSR.09
      +/CSR.22*CSR.21*/CSR.18*CSR.16

IF(VCC] READ.REGS:=/CSR.22*CSR.21*CSR.17*CSR.16*/DISABL.D-BUS
        *CSR.18*SEL.REGS
      +/CSR.22*CSP.21*CSR.18*/CSR.17*/DISABL.D-BUS
      +CSR.22*SEL.REGS*/DISABL.D-BUS*/CSR.18
      +CSR.22*SEL.REGS*/DISABL.D-BUS*CSR.09
      +/CSR.22*CSR.21*CSR.17*/CSR.16*/DISABL.D-BUS
        *CSR.10*SEL.REGS
      +/CSR.22*CSR.21*CSR.17*/CSR.16*/DISABL.D-BUS
        *CSR.09*SEL.REGS
```

PART NUMBER: 23-021J5-00

DEVICE TYPE: PAL16L8

SCHEMATIC SHEET 8:D-CS-M8390-0-0APH

LOCATION/DESCRIPTION: E43/ SIGN EXTEND CONTROL

ASSIGNED PIN NUMBER:

1= CSR.22	8= MDT.8	15=/READ.IN.MEMORY
2= CSR.21	9= GATE.DIR	16=/EN.LS.HI
3= CSR.18	10= GND	17=/EN.XCVR.80
4= CSR.17	11= DISABL.D-BUS	18=/EN.XCVR.81
5=/SEL.REGS	12=/EN.SXT.91	19=/EN.XCVR.HI.WD
6= CSR.16	13=/EN.SXT.HI.WD	20= VCC
7= MDT.1	14= NC	

EQUATIONS:

```
IF(VCC] EN.SXT.81:=CSR.22*SEL.REGS*/DISABL.D-BUS
      +/CSR.22*CSR.21*CSR.18*CSR.17*SEL.REGS*/DISABL.D-BUS
      +/CSR.22*CSR.21*CSR.18*/CSR.17*/CSR.16*/DISABL.D-BUS
      +/CSR.22*CSR.21*/CSR.18*/CSR.17*/MDT.8*/DISABL.D-BUS

IF(VCC] EN.SXT.HI.WD:=CSR.22*SEL.REGS*/DISABL.D-BUS
      +/CSR.22*CSR.21*CSR.18*CSR.17*SEL.REGS*/DISABL.D-BUS
      +/CSR.22*CSR.21*CSR.18*/CSR.17*/CSR.16*/DISABL.D-BUS
      +/CSR.22*CSR.21*/CSR.18*/CSR.17*/MDT.1*/DISABL.D-BUS

IF(VCC] READ.IN.MEMORY:=/GATE.DIR

IF(VCC] EN.LS.HI:=CSR.22*/SEL.REGS*/DISABL.D-BUS
      +/CSR.22*CSR.21*CSR.17*/SEL.REGS*/DISABL.D-BUS
      +/CSR.22*/CSR.21*/DISABL.D-BUS

IF(VCC] EN.XCVR.80:=/CSR.22*CSR.21*/CSR.18*/CSR.17*/DISABL.D-BUS
      +/CSR.22*CSR.21*/CSR.18*CSR.17*GATE.DIR*/DISABL.D-BUS
      +/CSR.22*/CSR.21*GATE.DIR*/DISABL.D-BUS

IF(VCC] EN.XCVR.81:=/CSR.22*CSR.21*/CSR.18*/CSR.17*/DISABL.D-BUS*MDT.8
      +/CSR.22*CSR.21*/CSR.18*CSR.17*GATE.DIR*/DISABL.D-BUS
      +/CSR.22*/CSR.21*GATE.DIR*/DISABL.D-BUS

IF(VCC] EN.XCVR.HI.WD:=/CSR.22*CSR.21*/CSR.18*/CSR.17
        *//DISABL.D-BUS*MDT.1
      +/CSR.22*CSP.21*/CSR.18*CSR.17*GATE.DIR
        *//DISABL.D-BUS
      +/CSR.22*/CSR.21*GATE.DIR*/DISABL.D-BUS
```

PART NUMBER: 23-041J5-00

DEVICE TYPE: PAL16L8

SCHEMATIC SHEET 8:D-CS-M8390-0-0APH

LOCATION/DESCRIPTION: E36/ SHIFT DATA

ASSIGNED PIN NUMBER:

1= DEST.CTL.2	8= V.LONG	15= Q.SHF.LSB
2= DEST.CTL.1	9= T.30	16= RAM.SHF.LSB
3= CARRY.32	10= GND	17= Q.SHF.MSB
4= CSR.13	11= T.04	18= RAM.SHF.MSB
5= CSR.12	12= T.OR.TP	19= NC
6= CSR.11	13= NC	20= VCC
7= N.LONG	14= NC	

EQUATIONS:

```
IF(VCC] /T.OR.TP:=/T.30*/T.04

IF(DEST.CTL.2*DEST.CTL.1] /Q.SHF.LSB:=/CSR.13*/CSR.12*/CSR.11*/Q.SHF.MSB
        +/CSR.13*/CSR.12*CSR.11*/RAM.SHF.MSB
        +/CSR.13*CSR.12
        +CSR.13*/CSR.11

IF(DEST.CTL.2*DEST.CTL.1] /RAM.SHF.LSB:=/CSR.13*/CSR.12*/CSR.11
        */RAM.SHF.MSB
        +/CSR.13*CSR.11*/Q.SHF.MSB
        +/CSR.13*CSR.12*/CSR.11
        +CSR.13

IF(DEST.CTL.2*/DEST.CTL.1] /Q.SHF.MSB:=/CSR.13*/CSR.12*/CSR.11
        */Q.SHF.LSB
        +/CSR.13*CSR.11*/RAM.SHF.LSB
        +/CSR.13*CSR.12*/CSR.11
        +CSR.13*/CSR.12*/RAM.SHF.LSB
        +CSR.13*/CSR.11*/RAM.SHF.LSB

IF(DEST.CTL.2*/DEST.CTL.1] /RAM.SHF.MSB:=/CSR.13*/CSR.12*/CSR.11
        */RAM.SHF.LSB
        +/CSR.13*/CSR.12*CSR.11*/Q.SHF.LSB
        +/CSR.13*CSR.12*/N.LONG
        +CSR.13*/CSR.12*/CSR.11*/N.LONG*/V.LONG
        +CSR.13*/CSR.12*/CSR.11*N.LONG*V.LONG
        +CSR.13*/CSR.12*CSR.11*/CARRY.32
        +CSR.13*CSR.12
```

23-020J5-00
23-021J5-00
23-041J5-00

THIS DRAWING AND SPECIFICATIONS, WHETHER OR NOT PUBLISHED, ARE THE PROPERTY OF DIGITAL EQUIPMENT CORPORATION AND SHALL NOT BE REPRODUCED OR COPIED OR USED IN WHOLE OR IN PART AS THE BASIS FOR THE MANUFACTURE OR SALE OF ITEMS WITHOUT WRITTEN PERMISSION. COPYRIGHT © 1981 DIGITAL EQUIPMENT CORPORATION

REVISIONS		
CHK	CHANGE NO.	REV

DRN [illegible] DATE 11-SEP-81 ENG. DATE

CHK D. DATE EXPAD LOCATION: SHEET 03 OF 14

DSK1:GLDPW3.T2FC362.1503]11-SEP-81 13:12 NEXT HIGHER ASSEMBLY: 8-DD-M8390-0-0

FIRST USED ON OPTION/MODEL: 11/730

TITLE: DATA PATH ROM AND PAL LISTINGS

SIZE D | CODE GL | NUMBER M8390-0-0 | REV. A

PART NUMBER: 23-006K3-00

DEVICE TYPE: PAL16R4

SCHEMATIC SHEET #:D-CS-M8390-0-0APF

LOCATION/DESCRIPTION: E72/ BRANCH COND. ,CC

ASSIGNED PIN NUMBER:

1= REGISTER.CLOCK	8= PSL.V	15= IB.0.SAVE
2= IB.0	9= PSL.C	16= OPC.TYPE.0
3= DT.CLASS.0	10= GND	17= OPC.TYPE.1
4= CC.CLASS.1	11= REG.OUT.EN	18= BR.FALSE
5= CC.CLASS.0	12=/RMODE.B	19= REGISTER.MODE
6= PSL.N	13=/RMODE.A	20= VCC
7= PSL.Z	14=/PRETEST	

EQUATIONS:

```
PRETEST:=/CC.CLASS.1*PSL.Z
      +/DT.CLASS.0*CC.CLASS.0*PSL.C
      +DT.CLASS.0*/CC.CLASS.0*PSL.N
      +/DT.CLASS.0*CC.CLASS.1*/CC.CLASS.0*PSL.V
      +DT.CLASS.0*CC.CLASS.0*PSL.N*/PSL.V
      +DT.CLASS.0*CC.CLASS.0*/PSL.N*PSL.V

/IB.0.SAVE:=/IB.0

/OPC.TYPE.0:=/CC.CLASS.0

/OPC.TYPE.1:=/CC.CLASS.1

IF(VCC) /BR.FALSE:=/IB.0.SAVE*PRETEST
      +IB.0.SAVE*/PRETEST

IF(VCC) /REGISTER.MODE:=/RMODE.A
```

PART NUMBER: 23-007K3-00

DEVICE TYPE: PAL16R4

SCHEMATIC SHEET #:D-CS-M8390-0-0APB

LOCATION/DESCRIPTION: E71/ I-STREAM DATA PROCESSING,R-DEST.

ASSIGNED PIN NUMBER:

1= REGISTER.CLK	8= CSR.04	15= RBKUP.FLAG
2= Y.31	9= CSR.03	16=/GPR.DEST
3=/LD.PSL	10= GND	17= COMPAT.MODE
4= R.MODE	11= REG.OUT.EN	18= OS.CTL.0
5= DECODE.INSTR	12=/SET.RBKUP	19= OS.CTL.1
6= CSR.05	13=/IRD.STATE	20= VCC
7= CSR.06	14=/CM.IRD	

EQUATIONS:

```
IF(VCC) /OS.CTL.1:=DECODE.INSTR*CSR.06*/COMPAT.MODE
      +DECODE.INSTR*CSR.06*/CSR.05
      +CM.IRD*/DECODE.INSTR

IF(VCC) /OS.CTL.0:=DECODE.INSTR*CSR.06

/COMPAT.MODE:=LD.PSL*/Y.31
      +/LD.PSL*/COMPAT.MODE

GPR.DEST:=DECODE.INSTR*CSR.05*R.MODE
      +DECODE.INSTR*GPR.DEST
      +CSR.05*GPR.DEST

/RBKUP.FLAG:=IRD.STATE
      +/SET.RBKUP*/RBKUP.FLAG

CM.IRD:=DECODE.INSTR*CSR.03*CSR.04*COMPAT.MODE

IF(VCC) IRD.STATE:=DECODE.INSTR*CSR.03*CSR.04
```

PART NUMBER: 23-008K3-00

DEVICE TYPE: PAL16R4

SCHEMATIC SHEET #:D-CS-M8390-0-0APB

LOCATION/DESCRIPTION: E53/ DATA TYPE CONTROL

ASSIGNED PIN NUMBER:

1= CLK.REGS	8= MDT.CTL.1	15= D.01
2= DT.CLASS.1	9= MDT.CTL.0	16= D.06
3= DT.CLASS.0	10= GND	17= D.07
4=/IRD.STATE	11= EN.STAT.REG	18= MDT.0
5= Y.01	12= SIZE.REG.0	19= MDT.1
6= Y.00	13= SIZE.REG.1	20= VCC
7=/LOAD.STAT	14= D.00	

EQUATIONS:

```
IF(VCC) /SIZE.REG.0:=/D.00

IF(VCC) /SIZE.REG.1:=/D.01

/D.00:=IRD.STATE*/DT.CLASS.0
      +LOAD.STAT*/Y.00
      +/IRD.STATE*/LOAD.STAT*/D.00

/D.01:=IRD.STATE*/DT.CLASS.1
      +LOAD.STAT*/Y.01
      +/IRD.STATE*/LOAD.STAT*/D.01

/D.06:=/MDT.CTL.1*/MDT.CTL.0
      +MDT.CTL.1*MDT.CTL.0*/D.06

/D.07:=/MDT.CTL.1
      +MDT.CTL.1*MDT.CTL.0*/D.07

IF(VCC) /MDT.0:=/D.06

IF(VCC) /MDT.1:=/D.07
```

23-006K3-00
23-007K3-00
23-008K3-00

REVISIONS		
CHK	CHANGE NO.	REV

DRN: J.M.Hansen | DATE ENG. 11-SEP-81 | DATE
CHK'D. | DATE | BOARD LOCATION: | SHEET 14 OF 14

TITLE: DATA PATH ROM AND PAL LISTINGS

OSKI:GLDP04,T2PK(362,1500) 11-SEP-81 15:12 | NEXT HIGHER ASSEMBLY: 19-00-M8390-0-0 | FIRST USED ON OPTION/MODEL: 11/730

SIZE	CODE	NUMBER	REV.
D	GL	M8390-0-0	A

REV. A | NUMBER M8390-0-0 | CODE GL | SIZE D

PART NUMBER: 23-010K3-00

DEVICE TYPE: PAL16R4

SCHEMATIC SHEET 8:D-CS-M8390-0-0APH

LOCATION/DESCRIPTION: E68/ OS EVEN NUMBERED BITS

ASSIGNED PIN NUMBER:

1= CLK.REGS	8= Y.2	15= OS.2
2= I8.6	9= Y.0	16= OS.4
3= I8.4	10= GND	17= OS.6
4= I8.2	11= REG.OUT.EN	18=/RMODE.0
5= I8.0	12= OS.CTL.0	19=/LOAD.Y.TO.OS
6= Y.6	13= OS.CTL.1	20= VCC
7= Y.4	14= OS.0	

EQUATIONS:

```
IF(VCC) RMODE.0:=OS.CTL.1*/I8.4
      +/OS.CTL.1*I8.6*I8.4

/OS.6:=/OS.CTL.1*/OS.CTL.0*/I8.6
      +/OS.CTL.1*OS.CTL.0*/OS.4
      +OS.CTL.1*/OS.CTL.0*/I8.6
      +OS.CTL.1*OS.CTL.0*/LOAD.Y.TO.OS*/OS.6
      +LOAD.Y.TO.OS*/Y.6

/OS.4:=/OS.CTL.1*/OS.CTL.0*/I8.4
      +/OS.CTL.1*OS.CTL.0*/OS.2
      +OS.CTL.1*/OS.CTL.0*/I8.4
      +OS.CTL.1*OS.CTL.0*/LOAD.Y.TO.OS*/OS.4
      +LOAD.Y.TO.OS*/Y.4

/OS.2:=/OS.CTL.1*/OS.CTL.0*/I8.2
      +/OS.CTL.1*OS.CTL.0*/OS.0
      +OS.CTL.1*/OS.CTL.0*/I8.2
      +OS.CTL.1*OS.CTL.0*/LOAD.Y.TO.OS*/OS.2
      +LOAD.Y.TO.OS*/Y.2

/OS.0:=/OS.CTL.1*/OS.CTL.0*/I8.0
      +/OS.CTL.1*OS.CTL.0*/I8.6
      +OS.CTL.1*/OS.CTL.0*/I8.0
      +OS.CTL.1*OS.CTL.0*/LOAD.Y.TO.OS*/OS.0
      +LOAD.Y.TO.OS*/Y.0
```

PART NUMBER: 23-011K3-00

DEVICE TYPE: PAL16R4

SCHEMATIC SHEET 8:D-CS-M8390-0-0APH

LOCATION/DESCRIPTION: E49/ OS ODD NUMBERED BITS

ASSIGNED PIN NUMBER:

1= CLK.REGS	8= Y.03	15= OS.3
2= I8.7	9= Y.01	16= OS.5
3= I8.5	10= GND	17= OS.7
4= I8.3	11= REG.OUT.EN	18=/RMODE.A
5= I8.1	12= OS.CTL.0	19=/LOAD.Y.TO.OS
6= Y.07	13= OS.CTL.1	20= VCC
7= Y.05	14= OS.1	

EQUATIONS:

```
IF(VCC) RMODE.A:=OS.CTL.1*/I8.5*/I8.3
      +/OS.CTL.1*/I8.7*/I8.5

/OS.7:=/OS.CTL.1*/OS.CTL.0*/I8.7
      +/OS.CTL.1*OS.CTL.0*/OS.5
      +OS.CTL.1*/OS.CTL.0*/I8.7
      +OS.CTL.1*OS.CTL.0*/LOAD.Y.TO.OS*/OS.7
      +LOAD.Y.TO.OS*/Y.07

/OS.5:=/OS.CTL.1*/OS.CTL.0*/I8.5
      +/OS.CTL.1*OS.CTL.0*/OS.3
      +OS.CTL.1*/OS.CTL.0*/I8.5
      +OS.CTL.1*OS.CTL.0*/LOAD.Y.TO.OS*/OS.5
      +LOAD.Y.TO.OS*/Y.05

/OS.3:=/OS.CTL.1*/I8.3
      +/OS.CTL.1*OS.CTL.0
      +OS.CTL.1*/OS.CTL.0
      +OS.CTL.1*/LOAD.Y.TO.OS*/OS.3
      +LOAD.Y.TO.OS*/Y.03

/OS.1:=/OS.CTL.1*/OS.CTL.0*/I8.1
      +/OS.CTL.1*OS.CTL.0*/I8.7
      +OS.CTL.1*/OS.CTL.0*/I8.1
      +OS.CTL.1*OS.CTL.0*/LOAD.Y.TO.OS*/OS.1
      +LOAD.Y.TO.OS*/Y.01
```

PART NUMBER: 23-012K3-00

DEVICE TYPE: PAL16R4

SCHEMATIC SHEET 8:D-CS-M8390-0-0APJ

LOCATION/DESCRIPTION: E112/ U STACK POINTER CONTROL

ASSIGNED PIN NUMBER:

1= CLK.REGS	8= NC	15=/SP.1
2= CSR.3	9= PRESET	16=/SP.2
3=/ENABLE.SP	10= GND	17=/SP.3
4= NC	11= REG.OUT.EN	18=/ADRS.2
5= NC	12=/ADRS.0	19=/ADRS.3
6= NC	13=/ADRS.1	20= VCC
7= NC	14=/SP.0	

EQUATIONS:

```
IF(VCC) ADRS.0:=CSR.3*/SP.1*SP.0
      +SP.1*SP.0
      +/CSR.3*SP.1*/SP.0

IF(VCC) ADRS.1:=/CSR.3*/SP.1*/SP.0
      +CSR.3*SP.1*SP.0
      +SP.1*/SP.0

SP.0:=ENABLE.SP*CSR.3*/SP.1*/SP.0*/PRESET
      +ENABLE.SP*/CSR.3*SP.1*/SP.0*/PRESET
      +/ENABLE.SP*SP.0*/PRESET
      +CSR.3*/SP.1*SP.0*/PRESET
      +/CSR.3*SP.1*SP.0*/PRESET

SP.1:=ENABLE.SP*/CSR.3*/SP.1*/SP.0*/PRESET
      +ENABLE.SP*CSR.3*/SP.1*SP.0*/PRESET
      +/ENABLE.SP*SP.1*/PRESET
      +CSR.3*SP.1*SP.0*/PRESET
      +/CSR.3*SP.1*/SP.0*/PRESET

SP.2:=ENABLE.SP*CSR.3*/SP.3*SP.1*/SP.0*/PRESET
      +ENABLE.SP*/CSR.3*SP.3*/SP.1*/SP.0*/PRESET
      +SP.2*SP.0*/PRESET
      +SP.3*SP.2*/SP.1*/PRESET
      +/SP.3*SP.2*SP.1*/PRESET
      +/ENABLE.SP*SP.2*/PRESET
      +CSR.3*/SP.3*SP.2*/PRESET
      +/CSR.3*SP.3*SP.2*/PRESET

SP.3:=ENABLE.SP*/CSR.3*/SP.2*/SP.1*/SP.0*/PRESET
      +ENABLE.SP*CSR.3*SP.2*SP.1*/SP.0*/PRESET
      +SP.3*SP.0*/PRESET
      +SP.3*/SP.2*/SP.1*/PRESET
      +SP.3*SP.2*SP.1*/PRESET
      +/ENABLE.SP*SP.3*/PRESET
      +CSR.3*SP.3*SP.2*/PRESET
      +/CSR.3*SP.3*SP.2*/PRESET

IF(VCC) ADRS.2:=/CSR.3*SP.3*/SP.1*/SP.0
      +CSR.3*SP.2
      +SP.3*SP.2
      +SP.2*SP.0
      +SP.2*SP.1

IF(VCC) ADRS.3:=/CSR.3*/SP.2*/SP.1*/SP.0
      +CSR.3*SP.3
      +SP.3*/SP.2
      +SP.3*SP.0
      +SP.3*SP.1
```

23-010K3-00
23-011K3-00
23-012K3-00

REVISIONS		
D-M	D-CHANGE NO.	REV

DRN: M.Mahoney	DATE: 11-SEP-81	ENG.	DATE
CHK'D.	DATE	SCALE:	SHEET 13 OF 14

TITLE: DATA PATH ROM AND PAL LISTINGS

D:SKI:GLDP05.T2P[367,1560]11-SEP-81 15:12	NEXT HIGHER ASSEMBLY: B-DD-M8390-0-0	SIZE: D	CODE: GL
FIRST USED ON OPTICAL MODEL: 11/730		NUMBER: M8390-0-0	REV: A

PART NUMBER: 23-0[illegible]3-00

DEVICE TYPE: PAL16R4

SCHEMATIC SHEET 8:D-CS-M8390-0-0APN

LOCATION/DESCRIPTION: E37/ ALU N,Z

ASSIGNED PIN NUMBER:

1= CLK.REGS	8= Z.BYTE	15= MPLIER.LSB
2= N.LONG	9= Y.02	16= ALU.Z
3= N.WORD	10= GND	17= ALU.N
4= N.BYTE	11= REG.OUT.EN	18=/LOAD.Y-BUS
5= Y.03	12= ALU.CC.F1	19= Q.SHF.LSB
6= Z.LONG	13= ALU.CC.F0	20= VCC
7= Z.WORD	14= NC	

EQUATIONS:

```
/MPLIER.LSB:=/Q.SHF.LSB

/ALU.Z:=/ALU.CC.F1*/LOAD.Y-BUS*/Z.BYTE
      +/ALU.CC.F1*ALU.CC.F0*/LOAD.Y-BUS*/Z.WORD
      +ALU.CC.F1*/ALU.CC.F0*/LOAD.Y-BUS*/Z.LONG
      +/ALU.CC.F0*/LOAD.Y-BUS*Z.BYTE
      +ALU.CC.F1*/ALU.CC.F0*/LOAD.Y-BUS*Z.WORD
      +ALU.CC.F1*ALU.CC.F0*/LOAD.Y-BUS*/ALU.Z
      +LOAD.Y-BUS*Y.02

/ALU.N:=/ALU.CC.F1*/ALU.CC.F0*/LOAD.Y-BUS*/N.BYTE
      +/ALU.CC.F1*ALU.CC.F0*/LOAD.Y-BUS*/N.WORD
      +ALU.CC.F1*/ALU.CC.F0*/LOAD.Y-BUS*/N.LONG
      +ALU.CC.F1*ALU.CC.F0*/LOAD.Y-BUS*/ALU.N
      +LOAD.Y-BUS*Y.03
```

PART NUMBER: 23-0[illegible]4K3-00

DEVICE TYPE: PAL16R4

SCHEMATIC SHEET 8:D-CS-M8390-0-0APN

LOCATION/DESCRIPTION: E39/ ALU [illegible]

ASSIGNED PIN NUMBER:

1= REGISTER.CLOCK	8= C.8	15=/HALF.CARRY
2= V.LONG	9= Y.00	16= ALU.C
3= V.WORD	10= GND	17= ALU.V
4= V.BYTE	11= REG.OUT.EN	18=/LOAD.Y-BUS
5= Y.01	12= ALU.CC.F1	19= C.4
6= C.32	13= ALU.CC.F0	20= VCC
7= C.16	14= NOT.ALU.C	

EQUATIONS:

```
/NOT.ALU.C:=/ALU.CC.F1*/ALU.CC.F0*/LOAD.Y-BUS*C.8
      +/ALU.CC.F1*ALU.CC.F0*/LOAD.Y-BUS*C.16
      +ALU.CC.F1*/ALU.CC.F0*/LOAD.Y-BUS*C.32
      +ALU.CC.F1*ALU.CC.F0*/LOAD.Y-BUS*ALU.C
      +LOAD.Y-BUS*Y.00

HALF_CARRY:=C.4

/ALU.C:=/ALU.CC.F1*/ALU.CC.F0*/LOAD.Y-BUS*/C.8
      +/ALU.CC.F1*ALU.CC.F0*/LOAD.Y-BUS*/C.16
      +ALU.CC.F1*/ALU.CC.F0*/LOAD.Y-BUS*/C.32
      +ALU.CC.F1*ALU.CC.F0*/LOAD.Y-BUS*/ALU.C
      +LOAD.Y-BUS*/Y.00

/ALU.V:=/ALU.CC.F1*/ALU.CC.F0*/LOAD.Y-BUS*/V.BYTE
      +/ALU.CC.F1*ALU.CC.F0*/LOAD.Y-BUS*/V.WORD
      +ALU.CC.F1*/ALU.CC.F0*/LOAD.Y-BUS*/V.LONG
      +ALU.CC.F1*ALU.CC.F0*/LOAD.Y-BUS*/ALU.V
      +LOAD.Y-BUS*/Y.01
```

PART NUMBER: 23-0[illegible]5K3-00

DEVICE TYPE: PAL16R4

SCHEMATIC SHEET 8:D-CS-M8390-0-0APN

LOCATION/DESCRIPTION: E58/ PSL CC

ASSIGNED PIN NUMBER:

1= CLK.REGS	8= COPY.CC	15= PSL.V
2= ALU.N	9= Y.03	16= PSL.Z
3= ALU.Z	10= GND	17= PSL.N
4= ALU.V	11= REG.OUT.EN	18= Y.00
5= ALU.C	12= Y.02	19=/LOAD.PSL.CC
6= OPC.TYPE.1	13= Y.01	20= VCC
7= OPC.TYPE.0	14= PSL.C	

EQUATIONS:

```
/PSL.C:=LOAD.PSL.CC*/Y.00
      +/LOAD.PSL.CC*/COPY.CC*/PSL.C
      +/LOAD.PSL.CC*COPY.CC*/OPC.TYPE.1*/OPC.TYPE.0*/ALU.C
      +/LOAD.PSL.CC*COPY.CC*/OPC.TYPE.1*OPC.TYPE.0*ALU.C
      +/LOAD.PSL.CC*COPY.CC*OPC.TYPE.1*/OPC.TYPE.0*ALU.C
      +/LOAD.PSL.CC*COPY.CC*OPC.TYPE.1*OPC.TYPE.0*/PSL.C

/PSL.V:=LOAD.PSL.CC*/Y.01
      +/LOAD.PSL.CC*/COPY.CC*/PSL.V
      +/LOAD.PSL.CC*COPY.CC*/ALU.V
      +/LOAD.PSL.CC*COPY.CC*OPC.TYPE.1

/PSL.Z:=LOAD.PSL.CC*/Y.02
      +/LOAD.PSL.CC*/COPY.CC*/PSL.Z
      +/LOAD.PSL.CC*COPY.CC*/ALU.Z

/PSL.N:=LOAD.PSL.CC*/Y.03
      +/LOAD.PSL.CC*/COPY.CC*/PSL.N
      +/LOAD.PSL.CC*COPY.CC*/ALU.N*/ALU.V
      +/LOAD.PSL.CC*COPY.CC*/OPC.TYPE.1*/ALU.N
      +/LOAD.PSL.CC*COPY.CC*OPC.TYPE.0*/ALU.N
```

23-0[illegible]3-00
23-0[illegible]4K3-00
23-0[illegible]5K3-00

THIS DRAWING AND SPECIFICATIONS, [illegible] PROPERTY OF DIGITAL EQUIPMENT CORPORATION AND SHALL NOT BE REPRODUCED OR COPIED OR USED IN WHOLE OR IN PART AS THE BASIS FOR THE MANUFACTURE OR SALE OF ITEMS WITHOUT WRITTEN PERMISSION. COPYRIGHT © 1981 DIGITAL EQUIPMENT CORPORATION

REVISIONS		
CHK	CHANGE NO.	REV

DRN D.McAleer	DATE 11-SEP-81	ENG.	DATE
CHK D.	DATE	BOARD LOCATION: SHEET 06 OF 14	

DSKIGL0P05,TAPL257,1580] 11-SEP-81 15:13 NEXT HIGHER ASSEMBLY: 9-DD-M8390-0-0

FIRST USED ON OPTION/MODEL: 11/730

TITLE: DATA PATH ROM AND PAL LISTINGS

SIZE	CODE	NUMBER	REV.
D	GL	M8390-0-0	A

PART NUMBER: 23-032K3-00

DEVICE TYPE: PAL16R4

SCHEMATIC SHEET #:D-CS-M8390-0-DAPK

LOCATION/DESCRIPTION: E41/ INTERRUPT CONTROLLER

ASSIGNED PIN NUMBER:

1= REGISTER.CLOCK	8= T.TRAP	15=/VECT.1
2=/HALT	9=/IRQ.2	16=/VECT.2
3= IPL.4	10= GND	17=/VECT.3
4= IPL.3	11= REQ.OUT.EN	18=/MASK
5= IPL.2	12=/IRQ.1	19=/IRQ.OUT
6= IPL.1	13=/IRQ.0	20= VCC
7= IPL.0	14=/VECT.0	

EQUATIONS:

```
VECT.0:=IRQ.0*/IPL.4
        +IRQ.2*IRQ.1*IRQ.0*/IPL.3
        +IRQ.2*IRQ.1*IRQ.0*/IPL.2
        +IRQ.2*IRQ.1*IRQ.0*/IPL.1
        +IRQ.0*/IPL.3*/IPL.2
        +IRQ.2*IRQ.0*/IPL.3*/IPL.2*/IPL.1
        +IRQ.2*IRQ.0*/IPL.3*/IPL.2*/IPL.0
        +IRQ.1*IRQ.0*/IPL.3*/IPL.2*/IPL.1*/IPL.0

VECT.1:=IRQ.1*/IPL.4
        +IRQ.2*IRQ.1*/IPL.3
        +IRQ.2*IRQ.1*IRQ.0*/IPL.2
        +IRQ.2*IRQ.1*IRQ.0*/IPL.1
        +IRQ.1*/IPL.3*/IPL.2
        +IRQ.1*IRQ.0*/IPL.3*/IPL.2*/IPL.1*/IPL.0

VECT.2:=IRQ.2*/IPL.4
        +IRQ.2*IRQ.1*/IPL.3
        +IRQ.2*IRQ.1*IRQ.0*/IPL.2
        +IRQ.2*IRQ.1*IRQ.0*/IPL.1
        +IRQ.2*/IPL.3*/IPL.2
        +IRQ.2*/IPL.3*IPL.2*/IPL.1
        +IRQ.2*IRQ.0*/IPL.3*IPL.2*/IPL.0

VECT.3:=HALT


IF(VCC) IRQ.OUT:=VECT.3*/MASK
        +VECT.2
        +VECT.1
        +VECT.0
        +T.TRAP*/MASK
```

PART NUMBER: 23-015J5-00

DEVICE TYPE: PAL16L8

SCHEMATIC SHEET #:D-CS-M8390-0-DAPA

LOCATION/DESCRIPTION: E25/ FUNCTION CONTROL SIGNAL GENERATION

ASSIGNED PIN NUMBER:

1= CSR.22	8= CSR.15	15= DEST.CTL.2
2= CSR.21	9= CSR.14	16= SRC.CTL.1B
3= CSR.20	10= GROUND	17= SRC.CTL.1A
4= CSR.19	11= MPLIER.LSB	18= DEST.CTL.1B
5= CSR.18	12= ALU.CARRY.IN	19= DEST.CTL.1A
6= CSR.17	13= SRC.CTL.0	20= VCC
7= CSR.16	14= SRC.CTL.2	

EQUATIONS:

```
IF(/CSR.22) /DEST.CTL.1A:= /CSR.21*/CSR.20*CSR.18
      +/CSR.20*CSR.19*/CSR.18
      +CSR.21*CSR.20*/CSR.19*/CSR.18*CSR.17
      +CSR.21*/CSR.19*CSR.18*/CSR.17
      +CSR.21*CSR.20*CSR.19
      +CSR.21*/CSR.20*/CSR.19*CSR.17*/CSR.15
      +CSR.21*/CSR.20*CSR.18*/CSR.17*CSR.16
         *CSR.15*CSR.14

IF(/CSR.22) /DEST.CTL.1B:= CSR.21*/CSR.20*/CSR.19*CSR.18*/CSR.17*CSR.16
      +/CSR.20*CSR.19
      +CSR.21*CSR.20
      +CSR.20*/CSR.19
      +CSR.20*/CSR.18

IF(/CSR.22) /SRC.CTL.1A:= /CSR.21*CSR.20*/CSR.19
      +CSR.21*CSR.19*CSR.18
      +CSR.21*/CSR.20*/CSR.18*CSR.15
      +CSR.21*/CSR.20*CSR.18*/CSR.17*/CSR.15
      +CSR.21*/CSR.20*CSR.18*/CSR.17*CSR.15
      +CSR.21*/CSR.20*CSR.19*/CSR.18*CSR.17
         */CSR.16*/CSR.15*MPLIER.LSB
      +CSR.21*/CSR.20*CSR.19

IF(CSR.22) /SRC.CTL.1B:= /CSR.21*/CSR.20

      +/CSR.20*/CSR.18
      +/CSR.20*CSR.19
      +/CSR.21*CSR.20*CSR.19*/CSR.17*CSR.16
      +CSR.21*CSR.20*CSR.19*/CSR.18*CSR.17
      +CSR.21*/CSR.20*CSR.18*/CSR.17*CSR.16

IF(VCC) /DEST.CTL.2:= CSR.22
      +/CSR.21
      +CSR.20
      +CSR.19
      +CSR.18
      +/CSR.17

IF(VCC) /SRC.CTL.2:= /CSR.22*CSR.21*/CSR.19*CSR.18*/CSR.17
      +/CSR.22*CSR.21*/CSR.20*CSR.19
      +/CSR.22*CSR.21*/CSR.20*/CSR.17*CSR.16*CSR.15
      +/CSR.22*CSR.21*/CSR.20*CSR.17
      +CSR.22*CSR.21*/CSR.19*CSR.18*CSR.17
      +CSR.22*CSR.21*CSR.20*CSR.19*/CSR.18

IF(VCC) /SRC.CTL.0:= /CSR.22*/CSR.21*CSR.20*/CSR.19
      +/CSR.22*CSR.21*CSR.20*CSR.19*CSR.18*CSR.17
      +/CSR.22*CSR.21*/CSR.20*/CSR.17
      +CSR.22*CSR.21*/CSR.19*CSR.18*CSR.17
      +CSR.22*CSR.20*CSR.19
      +CSR.22*CSR.20*CSR.19*/CSR.18*CSR.17
      +CSR.22*/CSR.21*CSR.20*CSR.19*CSR.18*/CSR.17*/CSR.16

IF(VCC) /ALU.CARRY.IN:= /CSR.22*CSR.21*CSR.20
      +/CSR.22*CSR.21*/CSR.20*/CSR.15*/CSR.14
      +/CSR.22*CSR.21*/CSR.20*/CSR.19*/CSR.18*CSR.17
         */CSR.16*CSR.15*CSR.14
      +CSR.22*/CSR.17*/CSR.16
      +CSR.22*CSR.21*CSR.20*CSR.19*/CSR.18*CSR.17*/CSR.16
      +CSR.22*CSR.21*/CSR.20*/CSR.19*CSR.18*CSR.17*CSR.16
```

PART NUMBER: 23-017J5-00

DEVICE TYPE: PAL16L8

SCHEMATIC SHEET #:D-CS-M8390-0-DAPJ

LOCATION/DESCRIPTION: E52/ MUX INCREMENT CONTROL

ASSIGNED PIN NUMBER:

1= ALU.N	8=/CONS.ACK	15= STATE.1
2= CSR.04	9=/JUMP.INSTR	16= STATE.0
3= CSR.03	10= GND	17= NC
4= CSR.02	11=/PORT.IRQ	18= ALU.V
5= CSR.01	12=/CR.OUT.1	19=/DR.OUT.0
6= CSR.00	13= ASKUP.FLAG	20= VCC
7=/CONS.ATTN	14= NC	

EQUATIONS:

```
IF(VCC) CR.OUT.0:=/JUMP.INSTR*/CSR.04*CSR.03*CSR.02*/CSR.01
        */CSR.00*STATE.0
      +/JUMP.INSTR*/CSR.04*CSR.03*CSR.02*/CSR.01
        *CSR.00*STATE.1
      +/JUMP.INSTR*/CSR.04*CSR.03*CSR.02*CSR.01
        */CSR.00*/STATE.0
      +/JUMP.INSTR*/CSR.04*CSR.03*CSR.02*CSR.01
        *CSR.00*/STATE.1
      +/JUMP.INSTR*CSR.04*CSR.03*/CSR.02*/CSR.01
        */CSR.00*/CONS.ATTN
      +/JUMP.INSTR*CSR.04*CSR.03*/CSR.02*/CSR.01
        *CSR.00*/CONS.ACK
      +/JUMP.INSTR*CSR.04*CSR.03*/CSR.02*CSR.01
        */CSR.00*/PORT.IRQ

IF(VCC) OR.OUT.1:=/JUMP.INSTR*CSR.04*CSR.03*/CSR.02*CSR.01
        *CSR.00*RSKUP.FLAG
      +/JUMP.INSTR*CSR.04*CSR.03*CSR.02*/CSR.01
        */CSR.00*ALU.N*/ALU.V
      +/JUMP.INSTR*CSR.04*CSR.03*CSR.02*/CSR.01
        */CSR.00*/ALU.N*ALU.V
```

23-032K3-00
23-015J5-00
23-017J5-00

"THIS DRAWING AND SPECIFICATIONS, AS AN UNPUBLISHED WORK, ARE THE PROPERTY OF DIGITAL EQUIPMENT CORPORATION AND SHALL NOT BE REPRODUCED OR COPIED OR USED IN WHOLE OR IN PART AS THE BASIS FOR THE MANUFACTURE OR SALE OF ITEMS WITHOUT PRIOR WRITTEN PERMISSION. COPYRIGHT (C) 1981 DIGITAL EQUIPMENT CORPORATION"

REVISIONS		
CHK	CHANGE NO.	REV

DRN: M. Thibodeau
CHK'D:
DATE: 23-SEP-81
ENG.
DATE
DATE
CROSS LOCATION:
SHEET 02 OF 13
03K1GL.DP07.T2PC367.1223 23-SEP-81 16:27
FIRST USED ON OPTION-MODEL: 11/730
NEXT HIGHER ASSEMBLY: B-DD-M8390-0-0

TITLE: DATA PATH ROM AND PAL LISTINGS

SIZE	CODE	NUMBER	REV.
D	GL	M8390-0-0	A

PART NUMBER: 23-001K4-00

DEVICE TYPE: PAL16R6

SCHEMATIC SHEET 8:D-CS-M8390-0-0APF

LOCATION/DESCRIPTION: E44/ IB CONTROL

ASSIGNED PIN NUMBER:

1= REGISTER.CLOCK	8= LOAD.IB	15= PC.EQUALS.3
2=/MREQ.IBFILL	9=/DATA.REQUEST	16= PC.0
3= Y.01	10= GND	17= PC.1
4= Y.00	11= REG.OUT.EN.L	18=/IB.VALID
5= DECODE.INSTR	12=/DATA.RECEIVED	19=/CLOCK.P2
6= CSR.08	13=/IB.LOADED	20= VCC
7= CPU.P2	14= STALL.ON.IB	

EQUATIONS:

```
IB.LOADED:= LOAD.IB
     +/IB.VALID*IB.LOADED

IB.VALID:= LOAD.IB*CLOCK.P2
     +IB.LOADED*CLOCK.P2
     +CPU.P2*/MREQ.IBFILL*/DECODE.INSTR*IB.VALID
     +CPU.P2*/MREQ.IBFILL*/CSR.09*IB.VALID
     +CPU.P2*/MREQ.IBFILL*/PC.EQUALS.3*IB.VALID
     +/CPU.P2*IB.VALID

/PC.1:=MREQ.IBFILL*/Y.01*CPU.P2
     +DECODE.INSTR*CSR.03*/Y.01*CPU.P2
     +/MREQ.IBFILL*/DECODE.INSTR*/PC.1*CPU.P2
     +/MREQ.IBFILL*/CSR.08*/PC.1*CPU.P2
     +/PC.1*/CPU.P2

/PC.0:=MREQ.IBFILL*/Y.00*CPU.P2
     +DECODE.INSTR*CSR.08*/Y.00*CPU.P2
     +/MREQ.IBFILL*/DECODE.INSTR*/PC.0*CPU.P2
     +/MREQ.IBFILL*/CSR.08*/PC.0*CPU.P2
     +/PC.0*/CPU.P2

/PC.EQUALS.3:=MREQ.IBFILL*/Y.01*CPU.P2
     +MREQ.IBFILL*/Y.00*CPU.P2
     +DECODE.INSTR*CSR.03*/Y.01*CPU.P2
     +DECODE.INSTR*CSR.03*/Y.00*CPU.P2
     +/MREQ.IBFILL*/DECODE.INSTR*/PC.EQUALS.3*CPU.P2
     +/MREQ.IBFILL*/CSR.08*/PC.EQUALS.3*CPU.P2
     +/PC.EQUALS.3*/CPU.P2

/STALL.ON.IB:=IB.VALID
     +MREQ.IBFILL*DECODE.INSTR*CPU.P2

IF(VCC) DATA.RECEIVED:=MREQ.IBFILL
     +DECODE.INSTR*CSR.09*PC.EQUALS.3
     +DATA.REQUEST
```

PART NUMBER: 23-002K4-00

DEVICE TYPE: PAL16R6

SCHEMATIC SHEET 8:D-CS-M8390-0-0APK

LOCATION/DESCRIPTION: E95/ MISC CONTROL

ASSIGNED PIN NUMBER:

1= REGISTER.CLOCK	8= RESET	15= STATE.1
2= MISC.INSTR	9=/IRD.STATE	16= CPU.ACK
3= CSR.15	10= GND	17= CPU.ATTN
4= CSR.14	11= REG.OUT.EN	18= UCS.PAGE
5= CSR.13	12= PORT.INSTR	19=/SET.RBKUP
6= CSR.12	13= SEL.ACC	20= VCC
7= CSR.10	14= STATE.0	

EQUATIONS:

```
IF(VCC) SET.RBKUP:=MISC.INSTR*/CSR.10*/CSR.15*CSR.14*CSR.13
     *CSR.12

/UCS.PAGE:=MISC.INSTR*/CSR.10*CSR.15*/CSR.14*CSR.13*/CSR.12
     +/MISC.INSTR*/UCS.PAGE
     +CSR.10*/UCS.PAGE
     +/CSR.15*/UCS.PAGE
     +CSR.14*/UCS.PAGE
     +/CSR.13*/UCS.PAGE
     +/CSR.12*/UCS.PAGE
     +RESET

/CPU.ATTN:=MISC.INSTR*/CSR.10*CSR.15*CSR.14*/CSR.13*/CSR.12
     +/MISC.INSTR*/CPU.ATTN
     +CSR.10*/CPU.ATTN
     +/CSR.15*/CPU.ATTN
     +/CSR.14*/CPU.ATTN
     +/CSR.13*/CPU.ATTN
     +CSR.12*/CPU.ATTN
     +RESET

/CPU.ACK:=MISC.INSTR*/CSR.10*CSR.15*CSR.14*/CSR.13*/CSR.12
     +/MISC.INSTR*/CPU.ACK
     +CSR.10*/CPU.ACK
     +/CSR.15*/CPU.ACK
     +/CSR.14*/CPU.ACK
     +CSR.13*/CPU.ACK
     +/CSR.12*/CPU.ACK
     +RESET

/STATE.1:=IRD.STATE
     +MISC.INSTR*/CSR.10*/CSR.15*/CSR.13*/CSR.12
     +MISC.INSTR*/CSR.10*/CSR.15*/CSR.14*/CSR.13
     +/MISC.INSTR*/STATE.1
     +CSR.10*/STATE.1
     +CSR.15*/STATE.1
     +/CSR.13*/STATE.1
     +CSR.12*/STATE.1

/STATE.0:=IRD.STATE
     +MISC.INSTR*/CSR.10*/CSR.15*/CSR.14*CSR.13
     +MISC.INSTR*/CSR.10*/CSR.15*/CSR.14*/CSR.12
     +/MISC.INSTR*/STATE.0
     +CSR.10*/STATE.0
     +CSR.15*/STATE.0
     +CSR.13*/STATE.0
     +/CSR.12*/STATE.0

/SEL.ACC:=MISC.INSTR*/CSR.10*CSR.15*/CSR.14*/CSR.13*CSR.12
     +/MISC.INSTR*/SEL.ACC
     +CSR.10*/SEL.ACC
     +/CSR.15*/SEL.ACC
     +CSR.14*/SEL.ACC
     +CSR.13*/SEL.ACC
     +CSR.12*/SEL.ACC
     +RESET

IF(VCC) /PORT.INSTR:=/MISC.INSTR
     +/CSR.13
```

PART NUMBER: 23-003K4-00

DEVICE TYPE: PAL16R6

SCHEMATIC SHEET 9:D-CS-M8390-0-0APK

LOCATION/DESCRIPTION: E57, E99, E118/ MICRO-PC-FIVE BIT SLICE

ASSIGNED PIN NUMBER:

1= CLK.UPC	8=/P2	15= UPC.2
2=/D.4	9= PARAL.LD.CSR	16= UPC.3
3=/D.3	10= GND	17= UPC.4
4=/D.2	11= EN.UPC.L	18= NC
5=/D.1	12= SI	19= PROP.L\SO
6=/D.0	13= UPC.0	20= VCC
7=/P1	14= UPC.1	

EQUATIONS:

```
/UPC.0:=/PARAL.LD.CSR*/SI
          +PARAL.LD.CSR*P1*P2*D.0
          +PARAL.LD.CSR*/P1*D.0
          +PARAL.LD.CSR*/P2*D.0

/UPC.1:=/PARAL.LD.CSR*/UPC.0
          +PARAL.LD.CSR*P1*P2*D.0*D.1
          +PARAL.LD.CSR*/P1*D.1
          +PARAL.LD.CSR*/P2*D.1
          +PARAL.LD.CSR*D.0*D.1

/UPC.2:=/PARAL.LD.CSR*/UPC.1
          +PARAL.LD.CSR*P1*P2*D.0*D.1*D.2
          +PARAL.LD.CSR*/P1*D.2
          +PARAL.LD.CSR*/P2*D.2
          +PARAL.LD.CSR*D.0*D.2
          +PARAL.LD.CSR*D.1*D.2

/UPC.3:=/PARAL.LD.CSR*/UPC.2
          +PARAL.LD.CSR*P1*P2*D.0*D.1*D.2*D.3
          +PARAL.LD.CSR*/P1*D.3
          +PARAL.LD.CSR*/P2*D.3
          +PARAL.LD.CSR*D.0*D.3
          +PARAL.LD.CSR*D.1*D.3
          +PARAL.LD.CSR*D.2*D.3

/UPC.4:=/PARAL.LD.CSR*/UPC.3
          +PARAL.LD.CSR*P1*P2*D.0*D.1*D.2*D.3*D.4
          +PARAL.LD.CSR*/P1*D.4
          +PARAL.LD.CSR*/P2*D.4
          +PARAL.LD.CSR*D.0*D.4
          +PARAL.LD.CSR*D.1*D.4
          +PARAL.LD.CSR*D.2*D.4
          +PARAL.LD.CSR*D.3*D.4

IF(VCC) /PROP.L\SO:=/PARAL.LD.CSR*/UPC.4
          +PARAL.LD.CSR*D.0*D.1*D.2*D.3*D.4
```

23-001K4-00
23-002K4-00
23-003K4-00

THIS DRAWING AND SPECIFICATIONS, WHETHER ARE THE PROPERTY OF DIGITAL EQUIPMENT CORPORATION AND SHALL NOT BE REPRODUCED OR COPIED OR USED IN WHOLE OR IN PART AS THE BASIS FOR THE MANUFACTURE OR SALE OF ITEMS WITHOUT WRITTEN PERMISSION. COPYRIGHT © '81, DIGITAL EQUIPMENT CORPORATION.

REVISIONS

CHG	CHANGE NO.	REV

DRN: M.M.Hofmann | DATE: 11-SEP-81 | ENG. | DATE | SHEET 09 OF 14

CHK'D. | DATE

OSK:GLOP08.T2PC 362,1500 11-SEP-81 15:12 | NEXT HIGHER ASSEMBLY: B-DD-M8390-0-0

FIRST USED ON OPTION/MODEL: 11/730

TITLE: DATA PATH ROM AND PAL LISTINGS

SIZE	CODE	NUMBER	REV.
D	GL	M8390-0-0	A

PROGRAM 8A(11) ** | 14-SEP-81 13:46:22 | SCALE: 0.500 | GLDP09.P_0

HEX LOC	HEX DAT	BIN DAT	HEX LOC	HEX DAT	BIN DAT	HEX LOC	HEX DAT	BIN DAT	HEX LOC	HEX DAT	BIN DAT
000	04	00000100	040	07	00000111	080	00	00000000	0C0	FF	11111111
001	04	00000100	041	07	00000111	081	00	00000000	0C1	FF	11111111
002	04	00000100	042	07	00000111	082	00	00000000	0C2	FF	11111111
003	04	00000100	043	07	00000111	083	00	00000000	0C3	FF	11111111
004	04	00000100	044	07	00000111	084	00	00000000	0C4	FF	11111111
005	04	00000100	045	07	00000111	085	00	00000000	0C5	FF	11111111
006	04	00000100	046	07	00000111	086	00	00000000	0C6	FF	11111111
007	04	00000100	047	07	00000111	087	00	00000000	0C7	FF	11111111
008	04	00000100	048	07	00000111	088	00	00000000	0C8	FF	11111111
009	04	00000100	049	07	00000111	089	00	00000000	0C9	FF	11111111
00A	04	00000100	04A	07	00000111	08A	00	00000000	0CA	FF	11111111
00B	04	00000100	04B	07	00000111	08B	00	00000000	0CB	FF	11111111
00C	04	00000100	04C	07	00000111	08C	00	00000000	0CC	FF	11111111
00D	04	00000100	04D	07	00000111	08D	00	00000000	0CD	FF	11111111
00E	04	00000100	04E	07	00000111	08E	00	00000000	0CE	FF	11111111
00F	04	00000100	04F	07	00000111	08F	00	00000000	0CF	FF	11111111
010	13	00010011	050	13	00010011	090	13	00010011	0D0	FF	11111111
011	13	00010011	051	13	00010011	091	13	00010011	0D1	FF	11111111
012	00	00000000	052	00	00000000	092	00	00000000	0D2	FF	11111111
013	13	00010011	053	13	00010011	093	13	00010011	0D3	FF	11111111
014	01	00000001	054	01	00000001	094	00	00000000	0D4	FF	11111111
015	01	00000001	055	01	00000001	095	00	00000000	0D5	FF	11111111
016	01	00000001	056	01	00000001	096	00	00000000	0D6	FF	11111111
017	01	00000001	057	01	00000001	097	00	00000000	0D7	FF	11111111
018	0D	00001101	058	0D	00001101	098	0D	00001101	0D8	FF	11111111
019	0D	00001101	059	0D	00001101	099	0D	00001101	0D9	FF	11111111
01A	00	00000000	05A	00	00000000	09A	00	00000000	0DA	FF	11111111
01B	0D	00001101	05B	0D	00001101	09B	0D	00001101	0DB	FF	11111111
01C	23	00100011	05C	23	00100011	09C	23	00100011	0DC	FF	11111111
01D	23	00100011	05D	23	00100011	09D	23	00100011	0DD	FF	11111111
01E	00	00000000	05E	00	00000000	09E	00	00000000	0DE	FF	11111111
01F	23	00100011	05F	23	00100011	09F	23	00100011	0DF	FF	11111111
020	2F	00101111	060	2F	00101111	0A0	2F	00101111	0E0	FF	11111111
021	2F	00101111	061	2F	00101111	0A1	2F	00101111	0E1	FF	11111111
022	3A	00111010	062	3A	00111010	0A2	3A	00111010	0E2	FF	11111111
023	2F	00101111	063	2F	00101111	0A3	2F	00101111	0E3	FF	11111111
024	43	01000011	064	43	01000011	0A4	43	01000011	0E4	FF	11111111
025	43	01000011	065	43	01000011	0A5	43	01000011	0E5	FF	11111111
026	51	01010001	066	51	01010001	0A6	51	01010001	0E6	FF	11111111
027	43	01000011	067	43	01000011	0A7	43	01000011	0E7	FF	11111111
028	5B	01011011	068	5B	01011011	0A8	5B	01011011	0E8	FF	11111111
029	5B	01011011	069	5B	01011011	0A9	5B	01011011	0E9	FF	11111111
02A	64	01100100	06A	64	01100100	0AA	64	01100100	0EA	FF	11111111
02B	5B	01011011	06B	5B	01011011	0AB	5B	01011011	0EB	FF	11111111
02C	6D	01101101	06C	6D	01101101	0AC	6D	01101101	0EC	FF	11111111
02D	6D	01101101	06D	6D	01101101	0AD	6D	01101101	0ED	FF	11111111
02E	79	01111001	06E	79	01111001	0AE	79	01111001	0EE	FF	11111111
02F	6D	01101101	06F	6D	01101101	0AF	6D	01101101	0EF	FF	11111111
030	85	10000101	070	85	10000101	0B0	85	10000101	0F0	FF	11111111
031	85	10000101	071	85	10000101	0B1	85	10000101	0F1	FF	11111111
032	92	10010010	072	92	10010010	0B2	92	10010010	0F2	FF	11111111
033	85	10000101	073	85	10000101	0B3	85	10000101	0F3	FF	11111111
034	9F	10011111	074	9F	10011111	0B4	9F	10011111	0F4	FF	11111111
035	9F	10011111	075	9F	10011111	0B5	9F	10011111	0F5	FF	11111111
036	AD	10101101	076	AD	10101101	0B6	AD	10101101	0F6	FF	11111111
037	9F	10011111	077	9F	10011111	0B7	9F	10011111	0F7	FF	11111111
038	BB	10111011	078	BB	10111011	0B8	BB	10111011	0F8	FF	11111111
039	BB	10111011	079	BB	10111011	0B9	BB	10111011	0F9	FF	11111111
03A	C8	11001000	07A	C8	11001000	0BA	C8	11001000	0FA	FF	11111111
03B	BB	10111011	07B	BB	10111011	0BB	BB	10111011	0FB	FF	11111111
03C	D5	11010101	07C	D5	11010101	0BC	D5	11010101	0FC	FF	11111111
03D	D5	11010101	07D	D5	11010101	0BD	D5	11010101	0FD	FF	11111111
03E	E3	11100011	07E	E3	11100011	0BE	E3	11100011	0FE	FF	11111111
03F	D5	11010101	07F	D5	11010101	0BF	D5	11010101	0FF	FF	11111111

HEX LOC	HEX DAT	BIN DAT	HEX LOC	HEX DAT	BIN DAT	HEX LOC	HEX DAT	BIN DAT	HEX LOC	HEX DAT	BIN DAT
100	00	00000000	140	00	00000000	180	2B	00101011	1C0	00	00000000
101	00	00000000	141	00	00000000	181	2B	00101011	1C1	00	00000000
102	00	00000000	142	00	00000000	182	2C	00101100	1C2	00	00000000
103	00	00000000	143	00	00000000	183	2C	00101100	1C3	00	00000000
104	00	00000000	144	00	00000000	184	31	00110001	1C4	00	00000000
105	00	00000000	145	00	00000000	185	31	00110001	1C5	00	00000000
106	00	00000000	146	00	00000000	186	38	00111000	1C6	00	00000000
107	00	00000000	147	00	00000000	187	38	00111000	1C7	00	00000000
108	00	00000000	148	00	00000000	188	41	01000001	1C8	00	00000000
109	00	00000000	149	00	00000000	189	41	01000001	1C9	00	00000000
10A	00	00000000	14A	00	00000000	18A	49	01001001	1CA	00	00000000
10B	00	00000000	14B	00	00000000	18B	49	01001001	1CB	00	00000000
10C	00	00000000	14C	00	00000000	18C	53	01010011	1CC	00	00000000
10D	00	00000000	14D	00	00000000	18D	53	01010011	1CD	00	00000000
10E	00	00000000	14E	00	00000000	18E	5C	01011100	1CE	00	00000000
10F	00	00000000	14F	00	00000000	18F	5C	01011100	1CF	00	00000000
110	13	00010011	150	22	00100010	190	2B	00101011	1D0	01	00000001
111	13	00010011	151	22	00100010	191	2B	00101011	1D1	01	00000001
112	00	00000000	152	22	00100010	192	2C	00101100	1D2	01	00000001
113	13	00010011	153	22	00100010	193	2C	00101100	1D3	01	00000001
114	02	00000010	154	00	00000000	194	31	00110001	1D4	01	00000001
115	02	00000010	155	00	00000000	195	31	00110001	1D5	01	00000001
116	02	00000010	156	00	00000000	196	38	00111000	1D6	01	00000001
117	02	00000010	157	00	00000000	197	38	00111000	1D7	01	00000001
118	0D	00001101	158	0D	00001101	198	41	01000001	1D8	01	00000001
119	0D	00001101	159	0D	00001101	199	41	01000001	1D9	01	00000001
11A	00	00000000	15A	00	00000000	19A	49	01001001	1DA	01	00000001
11B	0D	00001101	15B	0D	00001101	19B	49	01001001	1DB	01	00000001
11C	23	00100011	15C	23	00100011	19C	53	01010011	1DC	01	00000001
11D	23	00100011	15D	23	00100011	19D	53	01010011	1DD	01	00000001
11E	00	00000000	15E	00	00000000	19E	5C	01011100	1DE	01	00000001
11F	23	00100011	15F	23	00100011	19F	5C	01011100	1DF	01	00000001
120	2F	00101111	160	2F	00101111	1A0	2B	00101011	1E0	02	00000010
121	2F	00101111	161	2F	00101111	1A1	2B	00101011	1E1	02	00000010
122	3A	00111010	162	3A	00111010	1A2	2C	00101100	1E2	02	00000010
123	2F	00101111	163	2F	00101111	1A3	2C	00101100	1E3	02	00000010
124	43	01000011	164	43	01000011	1A4	31	00110001	1E4	02	00000010
125	43	01000011	165	43	01000011	1A5	31	00110001	1E5	02	00000010
126	51	01010001	166	51	01010001	1A6	38	00111000	1E6	02	00000010
127	43	01000011	167	43	01000011	1A7	38	00111000	1E7	02	00000010
128	5B	01011011	168	5B	01011011	1A8	41	01000001	1E8	02	00000010
129	5B	01011011	169	5B	01011011	1A9	41	01000001	1E9	02	00000010
12A	64	01100100	16A	64	01100100	1AA	49	01001001	1EA	02	00000010
12B	5B	01011011	16B	5B	01011011	1AB	49	01001001	1EB	02	00000010
12C	6D	01101101	16C	6D	01101101	1AC	53	01010011	1EC	02	00000010
12D	6D	01101101	16D	6D	01101101	1AD	53	01010011	1ED	02	00000010
12E	79	01111001	16E	79	01111001	1AE	5C	01011100	1EE	02	00000010
12F	6D	01101101	16F	6D	01101101	1AF	5C	01011100	1EF	02	00000010
130	85	10000101	170	85	10000101	1B0	2B	00101011	1F0	03	00000011
131	85	10000101	171	85	10000101	1B1	2B	00101011	1F1	03	00000011
132	92	10010010	172	92	10010010	1B2	2C	00101100	1F2	03	00000011
133	85	10000101	173	85	10000101	1B3	2C	00101100	1F3	03	00000011
134	9F	10011111	174	9F	10011111	1B4	31	00110001	1F4	03	00000011
135	9F	10011111	175	9F	10011111	1B5	31	00110001	1F5	03	00000011
136	AD	10101101	176	AD	10101101	1B6	38	00111000	1F6	03	00000011
137	9F	10011111	177	9F	10011111	1B7	38	00111000	1F7	03	00000011
138	BB	10111011	178	BB	10111011	1B8	41	01000001	1F8	03	00000011
139	BB	10111011	179	BB	10111011	1B9	41	01000001	1F9	03	00000011
13A	C8	11001000	17A	C8	11001000	1BA	49	01001001	1FA	03	00000011
13B	BB	10111011	17B	BB	10111011	1BB	49	01001001	1FB	03	00000011
13C	D5	11010101	17C	D5	11010101	1BC	53	01010011	1FC	03	00000011
13D	D5	11010101	17D	D5	11010101	1BD	53	01010011	1FD	03	00000011
13E	E3	11100011	17E	E3	11100011	1BE	5C	01011100	1FE	03	00000011
13F	D5	11010101	17F	D5	11010101	1BF	5C	01011100	1FF	03	00000011

PART NUMBER: 23-069D1-00
DEVICE TYPE: 512 X 8
SCHEMATIC SHEET #: D-CS-M8390-0-DAPF
LOCATION/DESCRIPTION: E93 / SPECIFIER CONTROL

LEFT COLUMN OF BIN DATA IS MSB
BINARY DATA "1" = HIGH
BINARY DATA "0" = LOW

THIS DRAWING AND SPECIFICATIONS, HEREIN, ARE THE PROPERTY OF DIGITAL EQUIPMENT CORPORATION AND SHALL NOT BE REPRODUCED OR COPIED OR USED IN WHOLE OR IN PART AS THE BASIS FOR THE MANUFACTURE OR SALE OF ITEMS WITHOUT WRITTEN PERMISSION. COPYRIGHT © 1981, DIGITAL EQUIPMENT CORPORATION

REVISIONS | CHK | CHANGE NO. | REV

digital | DRN. D. M. Hofmann | DATE 11-SEP-81 | ENG. | DATE | CHK'D. | DATE | EXPD LOCATION: SHEET 09 OF 14

DSK:GLDP09.T2P[367,1500] 11-SEP-81 15:13 | NEXT HIGHER ASSEMBLY: B-DD-M8390-0-0 | FIRST USED ON OPTION/MODEL: 11/730

TITLE: DATA PATH ROM AND PAL LISTINGS

SIZE D | CODE GL | NUMBER M8390-0-0 | REV. A

HEX LOC	HEX DAT	BIN DAT	HEX LOC	HEX DAT	BIN DAT	HEX LOC	HEX DAT	BIN DAT	HEX LOC	HEX DAT	BIN DAT
000	04	00000100	040	0E	00001110	080	27	00100111	0C0	30	00110000
001	04	00000100	041	0E	00001110	081	27	00100111	0C1	30	00110000
002	15	00010101	042	0E	00001110	082	27	00100111	0C2	30	00110000
003	05	00000101	043	0E	00001110	083	27	00100111	0C3	30	00110000
004	06	00000110	044	0E	00001110	084	27	00100111	0C4	30	00110000
005	04	00000100	045	0E	00001110	085	27	00100111	0C5	30	00110000
006	15	00010101	046	0E	00001110	086	27	00100111	0C6	30	00110000
007	04	00000100	047	0E	00001110	087	27	00100111	0C7	30	00110000
008	04	00000100	048	0E	00001110	088	04	00000100	0C8	30	00110000
009	04	00000100	049	0E	00001110	089	04	00000100	0C9	30	00110000
00A	04	00000100	04A	0E	00001110	08A	04	00000100	0CA	30	00110000
00B	04	00000100	04B	0E	00001110	08B	04	00000100	0CB	30	00110000
00C	04	00000100	04C	0E	00001110	08C	04	00000100	0CC	30	00110000
00D	04	00000100	04D	0E	00001110	08D	04	00000100	0CD	30	00110000
00E	04	00000100	04E	0E	00001110	08E	04	00000100	0CE	30	00110000
00F	04	00000100	04F	0E	00001110	08F	04	00000100	0CF	30	00110000
010	04	00000100	050	0E	00001110	090	04	00000100	0D0	30	00110000
011	04	00000100	051	0E	00001110	091	04	00000100	0D1	30	00110000
012	04	00000100	052	0E	00001110	092	04	00000100	0D2	30	00110000
013	04	00000100	053	0E	00001110	093	04	00000100	0D3	30	00110000
014	04	00000100	054	0E	00001110	094	04	00000100	0D4	30	00110000
015	04	00000100	055	0E	00001110	095	04	00000100	0D5	30	00110000
016	04	00000100	056	0E	00001110	096	04	00000100	0D6	30	00110000
017	04	00000100	057	0E	00001110	097	04	00000100	0D7	30	00110000
018	04	00000100	058	0E	00001110	098	04	00000100	0D8	30	00110000
019	04	00000100	059	0E	00001110	099	04	00000100	0D9	30	00110000
01A	04	00000100	05A	0E	00001110	09A	04	00000100	0DA	30	00110000
01B	04	00000100	05B	0E	00001110	09B	04	00000100	0DB	30	00110000
01C	04	00000100	05C	0E	00001110	09C	04	00000100	0DC	30	00110000
01D	04	00000100	05D	0E	00001110	09D	04	00000100	0DD	30	00110000
01E	04	00000100	05E	0E	00001110	09E	04	00000100	0DE	30	00110000
01F	04	00000100	05F	0E	00001110	09F	04	00000100	0DF	30	00110000
020	04	00000100	060	0E	00001110	0A0	07	00000111	0E0	30	00110000
021	04	00000100	061	0E	00001110	0A1	07	00000111	0E1	30	00110000
022	04	00000100	062	0E	00001110	0A2	07	00000111	0E2	30	00110000
023	04	00000100	063	0E	00001110	0A3	07	00000111	0E3	30	00110000
024	04	00000100	064	0E	00001110	0A4	07	00000111	0E4	30	00110000
025	04	00000100	065	0E	00001110	0A5	07	00000111	0E5	30	00110000
026	04	00000100	066	0E	00001110	0A6	07	00000111	0E6	30	00110000
027	04	00000100	067	0E	00001110	0A7	07	00000111	0E7	30	00110000
028	04	00000100	068	0E	00001110	0A8	07	00000111	0E8	30	00110000
029	04	00000100	069	0E	00001110	0A9	07	00000111	0E9	30	00110000
02A	04	00000100	06A	0E	00001110	0AA	07	00000111	0EA	30	00110000
02B	04	00000100	06B	0E	00001110	0AB	07	00000111	0EB	30	00110000
02C	04	00000100	06C	0E	00001110	0AC	07	00000111	0EC	30	00110000
02D	04	00000100	06D	0E	00001110	0AD	07	00000111	0ED	30	00110000
02E	04	00000100	06E	0E	00001110	0AE	07	00000111	0EE	30	00110000
02F	04	00000100	06F	0E	00001110	0AF	07	00000111	0EF	30	00110000
030	04	00000100	070	0E	00001110	0B0	07	00000111	0F0	30	00110000
031	04	00000100	071	0E	00001110	0B1	07	00000111	0F1	30	00110000
032	04	00000100	072	0E	00001110	0B2	07	00000111	0F2	30	00110000
033	04	00000100	073	0E	00001110	0B3	07	00000111	0F3	30	00110000
034	04	00000100	074	0E	00001110	0B4	07	00000111	0F4	30	00110000
035	04	00000100	075	0E	00001110	0B5	07	00000111	0F5	30	00110000
036	04	00000100	076	0E	00001110	0B6	07	00000111	0F6	30	00110000
037	04	00000100	077	0E	00001110	0B7	07	00000111	0F7	30	00110000
038	04	00000100	078	0E	00001110	0B8	07	00000111	0F8	30	00110000
039	04	00000100	079	0E	00001110	0B9	07	00000111	0F9	30	00110000
03A	04	00000100	07A	0E	00001110	0BA	07	00000111	0FA	30	00110000
03B	04	00000100	07B	0E	00001110	0BB	07	00000111	0FB	30	00110000
03C	04	00000100	07C	0E	00001110	0BC	07	00000111	0FC	30	00110000
03D	04	00000100	07D	0E	00001110	0BD	07	00000111	0FD	30	00110000
03E	04	00000100	07E	0E	00001110	0BE	07	00000111	0FE	30	00110000
03F	04	00000100	07F	0E	00001110	0BF	07	00000111	0FF	30	00110000

HEX LOC	HEX DAT	BIN DAT	HEX LOC	HEX DAT	BIN DAT	HEX LOC	HEX DAT	BIN DAT	HEX LOC	HEX DAT	BIN DAT
100	8D	10001101	140	DB	11011011	180	E2	10110010	1C0	DB	11011011
101	B1	10110001	141	DB	11011011	181	E2	10110010	1C1	DB	11011011
102	B2	10110010	142	DB	11011011	182	E2	10110010	1C2	DB	11011011
103	B2	10110010	143	DB	11011011	183	B2	10110010	1C3	DB	11011011
104	B2	10110010	144	DB	11011011	184	B2	10110010	1C4	DB	11011011
105	B2	10110010	145	DB	11011011	185	B2	10110010	1C5	DB	11011011
106	B2	10110010	146	DB	11011011	186	B2	10110010	1C6	DB	11011011
107	B2	10110010	147	DB	11011011	187	B2	10110010	1C7	DB	11011011
108	98	10011000	148	DB	11011011	188	B8	10111011	1C8	DB	11011011
109	98	10011000	149	DB	11011011	189	BC	10111100	1C9	DB	11011011
10A	7D	01111101	14A	DB	11011011	18A	7D	01111101	1CA	DB	11011011
10B	80	10000000	14B	DB	11011011	18B	80	10000000	1CB	DB	11011011
10C	83	10000011	14C	DB	11011011	18C	83	10000011	1CC	DB	11011011
10D	86	10000110	14D	DB	11011011	18D	89	10001001	1CD	DB	11011011
10E	BD	10111101	14E	DB	11011011	18E	BD	10111101	1CE	DB	11011011
10F	BD	10111101	14F	DB	11011011	18F	BD	10111101	1CF	DB	11011011
110	BE	10111110	150	CF	11001111	190	C2	11000010	1D0	CF	11001111
111	BE	10111110	151	CF	11001111	191	C2	11000010	1D1	CF	11001111
112	BE	10111110	152	CF	11001111	192	C2	11000010	1D2	CF	11001111
113	BE	10111110	153	CF	11001111	193	C2	11000010	1D3	CF	11001111
114	BE	10111110	154	CF	11001111	194	C2	11000010	1D4	CF	11001111
115	BE	10111110	155	CF	11001111	195	C2	11000010	1D5	CF	11001111
116	BE	10111110	156	CF	11001111	196	C2	11000010	1D6	CF	11001111
117	BE	10111110	157	CF	11001111	197	C2	11000010	1D7	CF	11001111
118	BE	10111110	158	CF	11001111	198	C2	11000010	1D8	CF	11001111
119	BE	10111110	159	CF	11001111	199	C2	11000010	1D9	CF	11001111
11A	BE	10111110	15A	CF	11001111	19A	C2	11000010	1DA	CF	11001111
11B	BE	10111110	15B	CF	11001111	19B	C2	11000010	1DB	CF	11001111
11C	BE	10111110	15C	CF	11001111	19C	C2	11000010	1DC	CF	11001111
11D	BE	10111110	15D	CF	11001111	19D	C2	11000010	1DD	CF	11001111
11E	BE	10111110	15E	CF	11001111	19E	C2	11000010	1DE	CF	11001111
11F	BE	10111110	15F	CF	11001111	19F	C2	11000010	1DF	CF	11001111
120	CC	11001100	160	D3	11010011	1A0	CC	11001100	1E0	D7	11010111
121	CC	11001100	161	D3	11010011	1A1	CC	11001100	1E1	D7	11010111
122	CC	11001100	162	D3	11010011	1A2	CC	11001100	1E2	D7	11010111
123	CC	11001100	163	D3	11010011	1A3	CC	11001100	1E3	D7	11010111
124	CC	11001100	164	D3	11010011	1A4	CC	11001100	1E4	D7	11010111
125	CC	11001100	165	D3	11010011	1A5	CC	11001100	1E5	D7	11010111
126	CC	11001100	166	D3	11010011	1A6	CC	11001100	1E6	D7	11010111
127	CC	11001100	167	D3	11010011	1A7	CC	11001100	1E7	D7	11010111
128	CC	11001100	168	D3	11010011	1A8	CC	11001100	1E8	D7	11010111
129	CC	11001100	169	D3	11010011	1A9	CC	11001100	1E9	D7	11010111
12A	CC	11001100	16A	D3	11010011	1AA	CC	11001100	1EA	D7	11010111
12B	CC	11001100	16B	D3	11010011	1AB	CC	11001100	1EB	D7	11010111
12C	CC	11001100	16C	D3	11010011	1AC	CC	11001100	1EC	D7	11010111
12D	CC	11001100	16D	D3	11010011	1AD	CC	11001100	1ED	D7	11010111
12E	CC	11001100	16E	D3	11010011	1AE	CC	11001100	1EE	D7	11010111
12F	CC	11001100	16F	D3	11010011	1AF	CC	11001100	1EF	D7	11010111
130	C9	11001001	170	8E	10001110	1B0	C9	11001001	1F0	BD	10111101
131	C9	11001001	171	8E	10001110	1B1	C9	11001001	1F1	BD	10111101
132	C9	11001001	172	90	10010000	1B2	C9	11001001	1F2	BD	10111101
133	C9	11001001	173	90	10010000	1B3	C9	11001001	1F3	BD	10111101
134	C9	11001001	174	92	10010010	1B4	C9	11001001	1F4	BD	10111101
135	C9	11001001	175	92	10010010	1B5	C9	11001001	1F5	BD	10111101
136	C9	11001001	176	94	10010100	1B6	C9	11001001	1F6	BD	10111101
137	C9	11001001	177	94	10010100	1B7	C9	11001001	1F7	BD	10111101
138	C9	11001001	178	96	10010110	1B8	C9	11001001	1F8	BD	10111101
139	C9	11001001	179	96	10010110	1B9	C9	11001001	1F9	BD	10111101
13A	C9	11001001	17A	BD	10111101	1BA	C9	11001001	1FA	BD	10111101
13B	C9	11001001	17B	BD	10111101	1BB	C9	11001001	1FB	BD	10111101
13C	C9	11001001	17C	BD	10111101	1BC	C9	11001001	1FC	BD	10111101
13D	C9	11001001	17D	BD	10111101	1BD	C9	11001001	1FD	BD	10111101
13E	C9	11001001	17E	A8	10101000	1BE	C9	11001001	1FE	BD	10111101
13F	C9	11001001	17F	A8	10101000	1BF	C9	11001001	1FF	BD	10111101

PART NUMBER: 23-133F3-00 ,PAGE 1
DEVICE TYPE:1024 X 8
SCHEMATIC SHEET #:D-CS-M8390-0-DAPF
LOCATION/DESCRIPTION: E103 / OPCODE DECODE

LEFT COLUMN OF BIN DATA IS MSB
BINARY DATA "1" = HIGH
BINARY DATA "0" = LOW

THIS DRAWING AND SPECIFICATIONS HEREIN, ARE THE PROPERTY OF DIGITAL EQUIPMENT CORPORATION AND SHALL NOT BE REPRODUCED OR COPIED OR USED IN WHOLE OR IN PART AS THE BASIS FOR THE MANUFACTURE OR SALE OF ITEMS WITHOUT WRITTEN PERMISSION. COPYRIGHT © 1981, DIGITAL EQUIPMENT CORPORATION

REVISIONS | CHK | CHANGE NO. | REV.

digital | DRN. D. McHofner | DATE 11-SEP-81 | ENG. | DATE | CHK'D. | DATE | BOARD LOCATION: | SHEET 10 OF 14

DSK: DP10.T2F[367,1520] 11-SEP-81 15:13 | NEXT HIGHER ASSEMBLY: B-DD-M8390-0-0

FIRST USED ON OPTION/MODEL: 11/730

TITLE: DATA PATH ROM AND PAL LISTINGS

SIZE D | CODE GL | NUMBER M8390-0-0 | REV. A

HEX LOC	HEX DAT	BIN DAT	HEX LOC	HEX DAT	BIN DAT	HEX LOC	HEX DAT	BIN DAT	HEX LOC	HEX DAT	BIN DAT
200	D8	11011000	240	03	00000011	280	2A	00101010	2C0	2A	00101010
201	EA	11101010	241	0C	00001100	281	00	00000000	2C1	00	00000000
202	00	00000000	242	00	00000000	282	3D	00111101	2C2	3D	00111101
203	D9	11011001	243	09	00001001	283	00	00000000	2C3	00	00000000
204	00	00000000	244	49	01001001	284	00	00000000	2C4	15	00010101
205	00	00000000	245	4E	01001110	285	1A	00011010	2C5	28	00101000
206	DB	11011011	246	28	00101000	286	2C	00101100	2C6	47	01000111
207	DC	11011100	247	2D	00101101	287	76	01110110	2C7	8B	10001011
208	11	00010001	248	A8	10101000	288	43	01000011	2C8	43	01000011
209	12	00010010	249	AD	10101101	289	4B	01001011	2C9	4B	01001011
20A	66	01100110	24A	B2	10110010	28A	4C	01001100	2CA	4C	01001100
20B	E6	11100110	24B	B6	10110110	28B	54	01010100	2CB	54	01010100
20C	D9	11011001	24C	FC	11111100	28C	56	01010110	2CC	56	01010110
20D	DA	11011010	24D	FC	11111100	28D	5E	01011110	2CD	5E	01011110
20E	18	00011000	24E	FC	11111100	28E	6A	01101010	2CE	6A	01101010
20F	38	00111000	24F	3F	00111111	28F	4C	01001100	2CF	4C	01001100
210	00	00000000	250	05	00000101	290	00	00000000	2D0	00	00000000
211	00	00000000	251	68	01101000	291	00	00000000	2D1	00	00000000
212	00	00000000	252	04	00000100	292	7A	01111010	2D2	7A	01111010
213	00	00000000	253	29	00101001	293	CD	11001101	2D3	CD	11001101
214	00	00000000	254	F1	11110001	294	00	00000000	2D4	00	00000000
215	00	00000000	255	DD	11011101	295	C6	11000110	2D5	C6	11000110
216	00	00000000	256	CB	11001011	296	00	00000000	2D6	00	00000000
217	00	00000000	257	DF	11011111	297	00	00000000	2D7	00	00000000
218	00	00000000	258	DA	11011010	298	86	10000110	2D8	C1	11000001
219	00	00000000	259	DF	11011111	299	8D	10001101	2D9	C8	11001000
21A	00	00000000	25A	DF	11011111	29A	7E	01111110	2DA	E4	11100100
21B	00	00000000	25B	DF	11011111	29B	7D	01111101	2DB	DF	11011111
21C	00	00000000	25C	64	01100100	29C	D1	11010001	2DC	00	00000000
21D	00	00000000	25D	A0	10100000	29D	E3	11100011	2DD	5F	01011111
21E	00	00000000	25E	E8	11101000	29E	01	00000001	2DE	00	00000000
21F	00	00000000	25F	E9	11101001	29F	04	00000100	2DF	04	00000100
220	07	00000111	260	13	00010011	2A0	2A	00101010	2E0	64	01100100
221	08	00001000	261	21	00100001	2A1	00	00000000	2E1	69	01101001
222	09	00001001	262	10	00010000	2A2	3D	00111101	2E2	6E	01101110
223	0A	00001010	263	1E	00011110	2A3	00	00000000	2E3	7E	01111110
224	0F	00001111	264	52	01010010	2A4	0C	00001100	2E4	76	01110110
225	0B	00001011	265	5F	01011111	2A5	20	00100000	2E5	86	10000110
226	10	00010000	266	31	00110001	2A6	37	00110111	2E6	8E	10001110
227	0C	00001100	267	3F	00111111	2A7	7D	01111101	2E7	90	10010000
228	1D	00011101	268	8B	10001011	2A8	43	01000011	2E8	02	00000010
229	21	00100001	269	90	10010000	2A9	4B	01001011	2E9	05	00000101
22A	25	00100101	26A	95	10010101	2AA	4C	01001100	2EA	21	00100001
22B	26	00100110	26B	99	10011001	2AB	54	01010100	2EB	22	00100010
22C	1E	00011110	26C	F3	11110011	2AC	56	01010110	2EC	14	00010100
22D	22	00100010	26D	F3	11110011	2AD	5E	01011110	2ED	13	00010011
22E	1F	00011111	26E	F3	11110011	2AE	6A	01101010	2EE	09	00001001
22F	20	00100000	26F	77	01110111	2AF	4C	01001100	2EF	08	00001000
230	00	00000000	270	11	00010001	2B0	00	00000000	2F0	E5	11100101
231	00	00000000	271	76	01110110	2B1	00	00000000	2F1	E3	11100011
232	96	10010110	272	10	00010000	2B2	7A	01111010	2F2	00	00000000
233	A0	10100000	273	1D	00011101	2B3	CD	11001101	2F3	00	00000000
234	04	00000100	274	F2	11110010	2B4	00	00000000	2F4	00	00000000
235	05	00000101	275	DE	11011110	2B5	C6	11000110	2F5	00	00000000
236	0E	00001110	276	EB	11101011	2B6	00	00000000	2F6	A3	10100011
237	06	00000110	277	DF	11011111	2B7	00	00000000	2F7	B1	10110001
238	E7	11100111	278	01	00000001	2B8	3D	00111101	2F8	13	00010011
239	27	00100111	279	E0	11100000	2B9	3C	00111100	2F9	0D	00001101
23A	23	00100011	27A	E6	11100110	2BA	81	10000001	2FA	00	00000000
23B	24	00100100	27B	FD	11111101	2BB	A0	10100000	2FB	00	00000000
23C	82	10000010	27C	00	00000000	2BC	DB	11011011	2FC	E2	11100010
23D	E3	11100011	27D	00	00000000	2BD	DE	11011110	2FD	E3	11100011
23E	02	00000010	27E	E0	11100000	2BE	DC	11011100	2FE	E4	11100100
23F	04	00000100	27F	E1	11100001	2BF	DD	11011101	2FF	E5	11100101

HEX LOC	HEX DAT	BIN DAT	HEX LOC	HEX DAT	BIN DAT	HEX LOC	HEX DAT	BIN DAT	HEX LOC	HEX DAT	BIN DAT
300	BC	10111100	340	0B	00001011	380	04	00000100	3C0	04	00000100
301	BC	10111100	341	1D	00011101	381	C4	11000100	3C1	C4	11000100
302	BD	10111101	342	0B	00001011	382	04	00000100	3C2	04	00000100
303	BC	10111100	343	1D	00011101	383	CE	11001110	3C3	CE	11001110
304	BE	10111110	344	0B	00001011	384	24	00100100	3C4	14	00010100
305	D8	11011000	345	1D	00011101	385	43	01000011	3C5	50	01010000
306	BC	10111100	346	0B	00001011	386	24	00100100	3C6	14	00010100
307	BC	10111100	347	1D	00011101	387	43	01000011	3C7	50	01010000
308	79	01111001	348	4C	01001100	388	04	00000100	3C8	04	00000100
309	79	01111001	349	4C	01001100	389	33	00110011	3C9	33	00110011
30A	66	01100110	34A	4C	01001100	38A	04	00000100	3CA	04	00000100
30B	BC	10111100	34B	4C	01001100	38B	33	00110011	3CB	33	00110011
30C	89	10001001	34C	8D	10001101	38C	04	00000100	3CC	04	00000100
30D	89	10001001	34D	8D	10001101	38D	33	00110011	3CD	33	00110011
30E	86	10000110	34E	8D	10001101	38E	5C	01011100	3CE	5C	01011100
30F	86	10000110	34F	59	01011001	38F	66	01100110	3CF	66	01100110
310	C1	11000001	350	59	01011001	390	91	10010001	3D0	91	10010001
311	B0	10110000	351	4C	01001100	391	98	10011000	3D1	98	10011000
312	AF	10101111	352	59	01011001	392	5C	01011100	3D2	5C	01011100
313	AF	10101111	353	59	01011001	393	33	00110011	3D3	33	00110011
314	AF	10101111	354	4C	01001100	394	AA	10101010	3D4	AA	10101010
315	AF	10101111	355	BC	10111100	395	5C	01011100	3D5	5C	01011100
316	ED	11101101	356	4C	01001100	396	A0	10100000	3D6	A0	10100000
317	E6	11100110	357	BC	10111100	397	A5	10100101	3D7	A5	10100101
318	AF	10101111	358	BC	10111100	398	6B	01101011	3D8	04	00000100
319	AF	10101111	359	BC	10111100	399	6B	01101011	3D9	04	00000100
31A	AF	10101111	35A	BC	10111100	39A	5C	01011100	3DA	43	01000011
31B	AF	10101111	35B	BC	10111100	39B	5C	01011100	3DB	89	10001001
31C	AF	10101111	35C	86	10000110	39C	5C	01011100	3DC	C3	11000011
31D	AF	10101111	35D	86	10000110	39D	43	01000011	3DD	5C	01011100
31E	AF	10101111	35E	BC	10111100	39E	86	10000110	3DE	DF	11011111
31F	AF	10101111	35F	BC	10111100	39F	86	10000110	3DF	86	10000110
320	79	01111001	360	2B	00101011	3A0	04	00000100	3E0	7A	01111010
321	79	01111001	361	3C	00111100	3A1	C4	11000100	3E1	7A	01111010
322	79	01111001	362	2B	00101011	3A2	04	00000100	3E2	7A	01111010
323	79	01111001	363	3C	00111100	3A3	CE	11001110	3E3	7A	01111010
324	79	01111001	364	2B	00101011	3A4	24	00100100	3E4	7A	01111010
325	79	01111001	365	3C	00111100	3A5	43	01000011	3E5	7A	01111010
326	79	01111001	366	2B	00101011	3A6	24	00100100	3E6	7A	01111010
327	79	01111001	367	3C	00111100	3A7	43	01000011	3E7	7A	01111010
328	8C	10001100	368	62	01100010	3A8	04	00000100	3E8	66	01100110
329	8C	10001100	369	62	01100010	3A9	33	00110011	3E9	66	01100110
32A	8C	10001100	36A	62	01100010	3AA	04	00000100	3EA	66	01100110
32B	8C	10001100	36B	62	01100010	3AB	33	00110011	3EB	66	01100110
32C	8C	10001100	36C	8D	10001101	3AC	04	00000100	3EC	66	01100110
32D	8C	10001100	36D	8D	10001101	3AD	33	00110011	3ED	66	01100110
32E	8C	10001100	36E	8D	10001101	3AE	5C	01011100	3EE	66	01100110
32F	8C	10001100	36F	71	01110001	3AF	66	01100110	3EF	66	01100110
330	C2	11000010	370	71	01110001	3B0	91	10010001	3F0	43	01000011
331	B5	10110101	371	62	01100010	3B1	98	10011000	3F1	43	01000011
332	73	01110011	372	71	01110001	3B2	5C	01011100	3F2	FA	11111010
333	73	01110011	373	71	01110001	3B3	33	00110011	3F3	F9	11111001
334	79	01111001	374	62	01100010	3B4	AA	10101010	3F4	BF	10111111
335	79	01111001	375	BC	10111100	3B5	5C	01011100	3F5	C0	11000000
336	79	01111001	376	62	01100010	3B6	A0	10100000	3F6	80	10000000
337	79	01111001	377	BC	10111100	3B7	A5	10100101	3F7	80	10000000
338	BC	10111100	378	66	01100110	3B8	66	01100110	3F8	79	01111001
339	8C	10001100	379	89	10001001	3B9	66	01100110	3F9	79	01111001
33A	8C	10001100	37A	89	10001001	3BA	66	01100110	3FA	86	10000110
33B	8C	10001100	37B	89	10001001	3BB	66	01100110	3FB	66	01100110
33C	5C	01011100	37C	00	00000000	3BC	89	10001001	3FC	BC	10111100
33D	43	01000011	37D	97	10010111	3BD	89	10001001	3FD	BC	10111100
33E	86	10000110	37E	BC	10111100	3BE	89	10001001	3FE	BC	10111100
33F	86	10000110	37F	BC	10111100	3BF	89	10001001	3FF	BC	10111100

PART NUMBER: 23-133F3-00 PAGE 2
DEVICE TYPE:1024 X 8
SCHEMATIC SHEET #:D-CS-M8390-0-DAPF
LOCATION/DESCRIPTION: E103 / OPCODE DECODE

LEFT COLUMN OF BIN DATA IS MSB
BINARY DATA "1" = HIGH
BINARY DATA "0" = LOW

THIS DRAWING AND SPECIFICATIONS, HEREIN, ARE THE PROPERTY OF DIGITAL EQUIPMENT CORPORATION AND SHALL NOT BE REPRODUCED OR COPIED OR USED IN WHOLE OR IN PART AS THE BASIS FOR THE MANUFACTURE OR SALE OF ITEMS WITHOUT WRITTEN PERMISSION. COPYRIGHT © 1981, DIGITAL EQUIPMENT CORPORATION

REVISIONS | CHK | CHANGE NO. | REV

digital | DRN. D M Hofner | DATE 11-SEP-81 | ENG. | DATE | CHK'D. | DATE | BOARD LOCATION: SHEET 11 OF 14

TITLE: DATA PATH ROM AND PAL LISTINGS

DSK:GLDP10.T2P[?67,1560]11-SEP-81 15:14 | NEXT HIGHER ASSEMBLY: B-DD-M8390-0-0 | FIRST USED ON OPTION/MODEL: 11/730

SIZE D | CODE GL | NUMBER M8390-0-0 | REV. A

HEX LOC	HEX DAT	BIN DAT	HEX LOC	HEX DAT	BIN DAT	HEX LOC	HEX DAT	BIN DAT	HEX LOC	HEX DAT	BIN DAT	HEX LOC	HEX DAT	BIN DAT	HEX LOC	HEX DAT	BIN DAT	HEX LOC	HEX DAT	BIN DAT
000	8	1000	040	3	0011	080	8	1000	0C0	3	0011	100	8	1000	140	0	0000	180	0	0000	1C0	8	1000
001	8	1000	041	3	0011	081	8	1000	0C1	3	0011	101	8	1000	141	0	0000	181	0	0000	1C1	8	1000
002	8	1000	042	3	0011	082	A	1010	0C2	3	0011	102	8	1000	142	0	0000	182	0	0000	1C2	8	1000
003	8	1000	043	3	0011	083	F	1111	0C3	3	0011	103	8	1000	143	0	0000	183	0	0000	1C3	8	1000
004	8	1000	044	3	0011	084	9	1001	0C4	3	0011	104	9	1001	144	1	0001	184	1	0001	1C4	9	1001
005	8	1000	045	3	0011	085	B	1011	0C5	3	0011	105	9	1001	145	1	0001	185	1	0001	1C5	9	1001
006	8	1000	046	3	0011	086	B	1011	0C6	3	0011	106	9	1001	146	1	0001	186	1	0001	1C6	9	1001
007	8	1000	047	3	0011	087	B	1011	0C7	3	0011	107	9	1001	147	1	0001	187	1	0001	1C7	9	1001
008	8	1000	048	3	0011	088	8	0000	0C8	B	1011	108	C	1100	148	2	0010	188	4	0100	1C8	A	1010
009	8	1000	049	3	0011	089	1	0001	0C9	B	1011	109	C	1100	149	2	0010	189	4	0100	1C9	A	1010
00A	8	1000	04A	3	0011	08A	B	1011	0CA	B	1011	10A	C	1100	14A	2	0010	18A	4	0100	1CA	A	1010
00B	8	1000	04B	3	0011	08B	8	1000	0CB	B	1011	10B	C	1100	14B	2	0010	18B	4	0100	1CB	A	1010
00C	8	1000	04C	3	0011	08C	3	0011	0CC	B	1011	10C	E	1110	14C	3	0011	18C	6	0110	1CC	B	1011
00D	8	1000	04D	3	0011	08D	B	1011	0CD	B	1011	10D	E	1110	14D	3	0011	18D	6	0110	1CD	B	1011
00E	8	1000	04E	3	0011	08E	3	0011	0CE	B	1011	10E	E	1110	14E	3	0011	18E	6	0110	1CE	B	1011
00F	8	1000	04F	3	0011	08F	B	1011	0CF	B	1011	10F	E	1110	14F	3	0011	18F	6	0110	1CF	B	1011
010	8	1000	050	3	0011	090	8	1000	0D0	3	0011	110	9	1001	150	5	0101	190	3	0011	1D0	C	1100
011	8	1000	051	3	0011	091	B	1011	0D1	3	0011	111	9	1001	151	5	0101	191	3	0011	1D1	C	1100
012	8	1000	052	3	0011	092	A	1010	0D2	3	0011	112	9	1001	152	5	0101	192	3	0011	1D2	C	1100
013	8	1000	053	3	0011	093	9	1001	0D3	3	0011	113	9	1001	153	5	0101	193	3	0011	1D3	C	1100
014	8	1000	054	3	0011	094	1	0001	0D4	3	0011	114	D	1101	154	6	0110	194	C	1100	1D4	E	1110
015	8	1000	055	3	0011	095	8	0000	0D5	3	0011	115	D	1101	155	6	0110	195	C	1100	1D5	E	1110
016	8	1000	056	3	0011	096	2	0010	0D6	3	0011	116	D	1101	156	6	0110	196	C	1100	1D6	E	1110
017	8	1000	057	3	0011	097	7	0111	0D7	3	0011	117	D	1101	157	6	0110	197	C	1100	1D7	E	1110
018	8	1000	058	3	0011	098	C	1100	0D8	B	1011	118	8	1000	158	4	0100	198	3	0011	1D8	B	1011
019	8	1000	059	3	0011	099	A	1010	0D9	B	1011	119	8	1000	159	4	0100	199	3	0011	1D9	B	1011
01A	8	1000	05A	3	0011	09A	B	1011	0DA	B	1011	11A	8	1000	15A	4	0100	19A	3	0011	1DA	B	1011
01B	8	1000	05B	3	0011	09B	B	1011	0DB	B	1011	11B	8	1000	15B	4	0100	19B	3	0011	1DB	B	1011
01C	8	1000	05C	3	0011	09C	B	1011	0DC	B	1011	11C	B	1011	15C	C	1100	19C	0	0000	1DC	A	1010
01D	8	1000	05D	3	0011	09D	B	1011	0DD	B	1011	11D	B	1011	15D	C	1100	19D	0	0000	1DD	A	1010
01E	8	1000	05E	3	0011	09E	B	1011	0DE	B	1011	11E	B	1011	15E	C	1100	19E	0	0000	1DE	A	1010
01F	8	1000	05F	3	0011	09F	B	1011	0DF	B	1011	11F	B	1011	15F	C	1100	19F	0	0000	1DF	A	1010
020	B	1011	060	B	1011	0A0	0	0000	0E0	B	1011	120	0	0000	160	3	0011	1A0	A	1010	1E0	F	1111
021	B	1011	061	B	1011	0A1	1	0001	0E1	B	1011	121	0	0000	161	3	0011	1A1	A	1010	1E1	F	1111
022	B	1011	062	B	1011	0A2	2	0010	0E2	B	1011	122	0	0000	162	3	0011	1A2	A	1010	1E2	F	1111
023	B	1011	063	B	1011	0A3	3	0011	0E3	B	1011	123	0	0000	163	3	0011	1A3	A	1010	1E3	F	1111
024	B	1011	064	B	1011	0A4	4	0100	0E4	B	1011	124	1	0001	164	C	1100	1A4	9	1001	1E4	A	1010
025	B	1011	065	B	1011	0A5	5	0101	0E5	B	1011	125	1	0001	165	C	1100	1A5	9	1001	1E5	A	1010
026	B	1011	066	B	1011	0A6	6	0110	0E6	B	1011	126	1	0001	166	C	1100	1A6	9	1001	1E6	A	1010
027	B	1011	067	B	1011	0A7	B	1011	0E7	B	1011	127	1	0001	167	C	1100	1A7	9	1001	1E7	A	1010
028	B	1011	068	B	1011	0A8	8	0000	0E8	B	1011	128	2	0010	168	A	1010	1A8	8	1000	1E8	8	1000
029	B	1011	069	B	1011	0A9	1	0001	0E9	B	1011	129	2	0010	169	A	1010	1A9	8	1000	1E9	8	1000
02A	B	1011	06A	B	1011	0AA	B	1011	0EA	B	1011	12A	2	0010	16A	A	1010	1AA	8	1000	1EA	8	1000
02B	B	1011	06B	B	1011	0AB	3	0011	0EB	B	1011	12B	2	0010	16B	A	1010	1AB	8	1000	1EB	8	1000
02C	B	1011	06C	B	1011	0AC	4	0100	0EC	B	1011	12C	3	0011	16C	9	1001	1AC	A	1010	1EC	A	1010
02D	B	1011	06D	B	1011	0AD	5	0101	0ED	B	1011	12D	3	0011	16D	9	1001	1AD	A	1010	1ED	A	1010
02E	B	1011	06E	B	1011	0AE	6	0110	0EE	B	1011	12E	3	0011	16E	9	1001	1AE	A	1010	1EE	A	1010
02F	B	1011	06F	B	1011	0AF	B	1011	0EF	B	1011	12F	3	0011	16F	9	1001	1AF	A	1010	1EF	A	1010
030	B	1011	070	B	1011	0B0	8	1000	0F0	8	1000	130	4	0100	170	8	1000	1B0	8	1000	1F0	A	1010
031	B	1011	071	B	1011	0B1	9	1001	0F1	8	1000	131	4	0100	171	8	1000	1B1	8	1000	1F1	A	1010
032	B	1011	072	B	1011	0B2	A	1010	0F2	8	1000	132	4	0100	172	8	1000	1B2	8	1000	1F2	A	1010
033	B	1011	073	B	1011	0B3	B	1011	0F3	8	1000	133	4	0100	173	8	1000	1B3	8	1000	1F3	A	1010
034	B	1011	074	B	1011	0B4	C	1100	0F4	8	1000	134	6	0110	174	A	1010	1B4	B	1011	1F4	F	1111
035	B	1011	075	B	1011	0B5	B	1011	0F5	8	1000	135	6	0110	175	A	1010	1B5	B	1011	1F5	F	1111
036	B	1011	076	B	1011	0B6	E	1110	0F6	8	1000	136	6	0110	176	A	1010	1B6	B	1011	1F6	F	1111
037	B	1011	077	B	1011	0B7	C	1100	0F7	8	1000	137	6	0110	177	A	1010	1B7	B	1011	1F7	F	1111
038	B	1011	078	B	1011	0B8	8	1000	0F8	B	1011	138	A	1010	178	9	1001	1B8	C	1100	1F8	9	1001
039	B	1011	079	B	1011	0B9	9	1001	0F9	B	1011	139	A	1010	179	9	1001	1B9	C	1100	1F9	9	1001
03A	B	1011	07A	B	1011	0BA	A	1010	0FA	B	1011	13A	A	1010	17A	9	1001	1BA	C	1100	1FA	9	1001
03B	B	1011	07B	B	1011	0BB	B	1011	0FB	B	1011	13B	A	1010	17B	9	1001	1BB	C	1100	1FB	9	1001
03C	B	1011	07C	B	1011	0BC	9	1001	0FC	B	1011	13C	9	1001	17C	F	1111	1BC	E	1110	1FC	8	1000
03D	B	1011	07D	B	1011	0BD	D	1101	0FD	B	1011	13D	9	1001	17D	F	1111	1BD	E	1110	1FD	8	1000
03E	B	1011	07E	B	1011	0BE	E	1110	0FE	B	1011	13E	9	1001	17E	F	1111	1BE	E	1110	1FE	8	1000
03F	B	1011	07F	B	1011	0BF	C	1100	0FF	B	1011	13F	9	1001	17F	F	1111	1BF	E	1110	1FF	8	1000

PART NUMBER: 23-945A9-00
DEVICE TYPE:512 X 4
SCHEMATIC SHEET #:D-CS-M8390-0-DAPA
LOCATION/DESCRIPTION: E46 / ALU CONTROL

LEFT COLUMN OF BIN DATA IS MSB
BINARY DATA "1" = HIGH
BINARY DATA "0" = LOW

REVISIONS		
CHK	CHANGE NO.	REV

DRN [illegible] DATE 21-SEP-81 ENG. DATE
CHK'D. DATE BOARD LOCATION:
SHEET 12 OF 12
DSK1:GLDP12.T2[7,357,1500]21-SEP-81 14:11
FIRST USED ON OPTION/MODEL: 11/730
NEXT HIGHER ASSEMBLY: B-DD-M9390-0-0

TITLE: DATA PATH ROM AND PAL LISTINGS

SIZE	CODE	NUMBER	REV.
D	GL	M8390-0-0	A

HEX LOC	HEX DAT	BIN DAT
000	3	0011
001	3	0011
002	3	0011
003	3	0011
004	3	0011
005	3	0011
006	3	0011
007	3	0011
008	7	0111
009	7	0111
00A	C	1100
00B	3	0011
00C	3	0011
00D	3	0011
00E	2	0010
00F	2	0010
010	0	0000
011	0	0000
012	0	0000
013	0	0000
014	4	0100
015	4	0100
016	0	0000
017	0	0000
018	6	0110
019	6	0110
01A	1	0001
01B	1	0001
01C	2	0010
01D	2	0010
01E	3	0011
01F	3	0011
020	4	0100
021	4	0100
022	4	0100
023	4	0100
024	7	0111
025	4	0120
026	7	0111
027	4	0100
028	7	0111
029	6	0110
02A	7	0111
02B	7	0111
02C	6	0110
02D	6	0110
02E	6	0110
02F	6	0110
030	0	0000
031	0	0000
032	4	0100
033	4	0100
034	7	0111
035	4	0100
036	7	0111
037	4	0100
038	4	0100
039	7	0111
03A	3	0011
03B	3	0011
03C	7	0111
03D	7	0111
03E	7	0111
03F	7	0111

HEX LOC	HEX DAT	BIN DAT
040	C	1100
041	C	1100
042	C	1100
043	C	1100
044	C	1100
045	C	1100
046	C	1100
047	C	1100
048	C	1100
049	C	1100
04A	C	1100
04B	C	1100
04C	0	0000
04D	4	0100
04E	C	1100
04F	F	1111
050	F	1111
051	C	1100
052	C	1100
053	C	1100
054	C	1100
055	C	1100
056	C	1100
057	F	1111
058	4	0100
059	F	1111
05A	F	1111
05B	F	1111
05C	0	0000
05D	0	0000
05E	0	0000
05F	0	0000
060	C	1100
061	C	1100
062	C	1100
063	C	1100
064	C	1100
065	C	1100
066	C	1100
067	C	1100
068	C	1100
069	C	1100
06A	C	1100
06B	C	1100
06C	0	0000
06D	4	0100
06E	C	1100
06F	F	1111
070	F	1111
071	C	1100
072	C	1100
073	C	1100
074	C	1100
075	C	1100
076	C	1100
077	F	1111
078	0	0000
079	0	0000
07A	C	1100
07B	C	1100
07C	F	1111
07D	F	1111
07E	F	1111
07F	F	1111

HEX LOC	HEX DAT	BIN DAT
080	0	0000
081	0	0000
082	1	0001
083	1	0001
084	0	0000
085	0	0000
086	0	0000
087	0	0000
088	3	0011
089	3	0011
08A	3	0011
08B	3	0011
08C	3	00''
08D	3	0011
08E	0	0000
08F	2	0010
090	3	0011
091	2	0010
092	3	0011
093	3	0011
094	3	0011
095	0	0000
096	0	0000
097	1	0001
098	0	0000
099	0	0000
09A	3	0011
09B	3	0011
09C	3	0011
09D	3	0011
09E	3	0011
09F	3	0011
0A0	4	0100
0A1	4	0100
0A2	5	0101
0A3	5	0101
0A4	4	0100
0A5	4	0100
0A6	4	0100
0A7	4	0100
0A8	7	0111
0A9	7	0111
0AA	7	0111
0AB	7	0111
0AC	7	0111
0AD	7	0111
0AE	4	0100
0AF	6	0110
0B0	7	0111
0B1	6	0110
0B2	7	0111
0B3	7	0111
0B4	7	0111
0B5	4	0100
0B6	4	0100
0B7	5	0101
0B8	4	0100
0B9	4	0100
0BA	7	0111
0BB	7	0111
0BC	7	0111
0BD	7	0111
0BE	7	0111
0BF	7	0111

HEX LOC	HEX DAT	BIN DAT
0C0	C	1100
0C1	C	1100
0C2	D	1101
0C3	D	1101
0C4	C	1100
0C5	C	1100
0C6	C	1100
0C7	C	1100
0C8	F	1111
0C9	F	1111
0CA	F	1111
0CB	F	1111
0CC	F	1111
0CD	F	1111
0CE	C	1100
0CF	E	1110
0D0	F	1111
0D1	E	1110
0D2	F	1111
0D3	F	1111
0D4	F	1111
0D5	C	1100
0D6	C	1100
0D7	D	1101
0D8	C	1100
0D9	D	1101
0DA	F	1111
0DB	F	1111
0DC	F	1111
0DD	F	1111
0DE	F	1111
0DF	F	1111
0E0	F	1111
0E1	F	1111
0E2	F	1111
0E3	F	1111
0E4	F	1111
0E5	F	1111
0E6	F	1111
0E7	F	1111
0E8	F	1111
0E9	F	1111
0EA	C	1100
0EB	C	1100
0EC	E	1110
0ED	E	1110
0EE	F	1111
0EF	F	1111
0F0	C	1100
0F1	F	1111
0F2	F	1111
0F3	F	1111
0F4	F	1111
0F5	F	1111
0F6	C	1100
0F7	C	1100
0F8	0	0000
0F9	F	1111
0FA	3	0011
0FB	F	1111
0FC	F	1111
0FD	F	1111
0FE	F	1111
0FF	F	1111

HEX LOC	HEX DAT	BIN DAT
100	7	0111
101	0	0000
102	0	0000
103	0	0000
104	7	0111
105	7	0111
106	5	0101
107	5	0101
108	7	0111
109	7	0111
10A	7	0111
10B	5	0101
10C	4	0100
10D	7	0111
10E	7	0111
10F	7	0111
110	7	0111
111	7	0111
112	7	0111
113	7	0111
114	7	0111
115	7	0111
116	7	0111
117	7	0111
118	7	0111
119	7	0111
11A	7	0111
11B	7	0111
11C	7	0111
11D	7	0111
11E	7	0111
11F	7	0111
120	5	0101
121	5	0101
122	5	0101
123	5	0101
124	5	0101
125	5	0101
126	5	0101
127	5	0101
128	5	0101
129	5	0101
12A	5	0101
12B	5	0101
12C	5	0101
12D	5	0101
12E	5	0101
12F	5	0101
130	7	0111
131	7	0111
132	7	0111
133	7	0111
134	7	0111
135	7	0111
136	7	0111
137	7	0111
138	7	0111
139	7	0111
13A	7	0111
13B	7	0111
13C	7	0111
13D	7	0111
13E	7	0111
13F	7	0111

HEX LOC	HEX DAT	BIN DAT
140	7	0111
141	7	0111
142	7	0111
143	7	0111
144	7	0111
145	7	0111
146	7	0111
147	7	0111
148	7	0111
149	7	0111
14A	7	0111
14B	7	0111
14C	7	0111
14D	7	0111
14E	7	0111
14F	7	0111
150	7	0111
151	7	0111
152	7	0111
153	7	0111
154	7	0111
155	7	0111
156	7	0111
157	7	0111
158	7	0111
159	7	0111
15A	7	0111
15B	7	0111
15C	7	0111
15D	7	0111
15E	7	0111
15F	7	0111
160	4	0100
161	4	0100
162	4	0100
163	4	0100
164	4	0100
165	4	0100
166	4	0100
167	4	0100
168	4	0100
169	4	0100
16A	4	0100
16B	4	0100
16C	4	0100
16D	4	0100
16E	4	0100
16F	4	0100
170	7	0111
171	7	0111
172	7	0111
173	7	0111
174	7	0111
175	7	0111
176	7	0111
177	7	0111
178	7	0111
179	7	0111
17A	7	0111
17B	7	0111
17C	7	0111
17D	7	0111
17E	7	0111
17F	7	0111

HEX LOC	HEX DAT	BIN DAT
180	6	0110
181	6	0110
182	1	0001
183	1	0001
184	2	0010
185	2	0010
186	3	0011
187	3	0011
188	7	0111
189	7	0111
18A	3	0011
18B	1	0001
18C	0	0000
18D	7	0111
18E	7	0111
18F	7	0111
190	3	0011
191	3	0011
192	3	0011
193	3	0011
194	3	0011
195	3	0011
196	3	0011
197	3	0011
198	3	0011
199	3	0011
19A	3	0011
19B	3	0011
19C	3	0011
19D	3	0011
19E	3	0011
19F	3	0011
1A0	1	0001
1A1	1	0001
1A2	1	0001
1A3	1	0001
1A4	1	0001
1A5	1	0001
1A6	1	0001
1A7	1	0001
1A8	1	0001
1A9	1	0001
1AA	1	0001
1AB	1	0001
1AC	1	0001
1AD	1	0001
1AE	1	0001
1AF	1	0001
1B0	3	0011
1B1	3	0011
1B2	3	0011
1B3	3	0011
1B4	3	0011
1B5	3	0011
1B6	3	0011
1B7	3	0011
1B8	3	0011
1B9	3	0011
1BA	3	0011
1BB	3	0011
1BC	3	0011
1BD	3	0011
1BE	3	0011
1BF	3	0011

HEX LOC	HEX DAT	BIN DAT
1C0	3	0011
1C1	3	0011
1C2	3	0011
1C3	3	0011
1C4	3	0011
1C5	3	0011
1C6	3	0011
1C7	3	0011
1C8	3	0011
1C9	3	0011
1CA	3	0011
1CB	3	0011
1CC	3	0011
1CD	3	0011
1CE	3	0011
1CF	3	0011
1D0	3	0011
1D1	3	0011
1D2	3	0011
1D3	3	0011
1D4	3	0011
1D5	3	0011
1D6	3	0011
1D7	3	0011
1D8	3	0011
1D9	3	0011
1DA	3	0011
1DB	3	0011
1DC	3	0011
1DD	3	0011
1DE	3	0011
1DF	3	0011
1E0	5	0101
1E1	5	0101
1E2	5	0101
1E3	5	0101
1E4	5	0101
1E5	5	0101
1E6	5	0101
1E7	5	0101
1E8	5	0101
1E9	5	0101
1EA	5	0101
1EB	5	0101
1EC	5	0101
1ED	5	0101
1EE	5	0101
1EF	5	0101
1F0	7	0111
1F1	7	0111
1F2	7	0111
1F3	7	0111
1F4	7	0111
1F5	7	0111
1F6	7	0111
1F7	7	0111
1F8	7	0111
1F9	7	0111
1FA	7	0111
1FB	7	0111
1FC	7	0111
1FD	7	0111
1FE	7	0111
1FF	7	0111

PART NUMBER: 23-954A9-00
DEVICE TYPE:512 X 4
SCHEMATIC SHEET #:D-CS-M8390-0-DAPF
LOCATION/DESCRIPTION: E82 / D.T. & C.C. CLASS

LEFT COLUMN OF BIN DATA IS MSB
BINARY DATA "1" = HIGH
BINARY DATA "0" = LOW

THIS DRAWING AND SPECIFICATIONS HEREIN, ARE THE PROPERTY OF DIGITAL EQUIPMENT CORPORATION AND SHALL NOT BE REPRODUCED OR COPIED OR USED IN WHOLE OR IN PART AS THE BASIS FOR THE MANUFACTURE OR SALE OF ITEMS WITHOUT WRITTEN PERMISSION. COPYRIGHT © 1981, DIGITAL EQUIPMENT CORPORATION

REVISIONS		
CHK	CHANGE NO.	REV

digital
DRN. D. M. Hopper DATE 21-SEP-81
CHK'D. DATE
ENG. DATE
SCSPD LOCATION: SHEET 13 OF 13
DSK:GLDP13.T2P[367,1530] 21-SEP-81 14:12
FIRST USED ON OPTION/MODEL: 11/730
NEXT HIGHER ASSEMBLY: B-DD-M8390-0-0

TITLE: DATA PATH ROM AND PAL LISTINGS

SIZE	CODE	NUMBER	REV.
D	GL	M8390-0-0	A

DATA PATH

MAIN MEMORY CYCLES (ADRS OUT, WRITE DATA OUT AND DATA IN)

CSR DELAY 10 | LS ADRS GEN: GATE 6, MUX SELECT 15 | LOCAL STORE RAM ACCESS TIME 50 | LS LATCH DELAY 10 | XCVR DELAY TO MC BUS 10 | T125 ADDRESS/DATA OUT TO MEMORY CONTROLLER VALID | T145 MEMORY DATA IN VALID | SIGN EXTENDER: MULTIPLEXER 12, BUFFER 10 | 2901A D --> ALU 2, PASS MODE 55 | COND. CODE LOGIC SETUP TIME (PAL) ALU CC'S 40

DISABLE ALL D - BUS DRIVERS 45 | D - ADDRESS DECODERS (PALS) 40 | TRI-STATE ENABLE TIME 22 (MAX) | 2901A D ---> G,P 35 | XCVR DELAY FROM MC BUS 10 | - 12 | 2901A D --> Y OUT, PASS MODE 40 | - 5 | LS RAM DATA SETUP 5 | LOCAL STORE RAM WRITE PULSE 45

ARITHMETIC READ-MODIFY-WRITE TO LOCAL STORE

CSR DELAY 10 | ALU FUNCTION CONTROL CODE GENERATION (ROM DELAY) 60 | 2901A ALU FUNCTION CTL ---> G,P | - 14 | 32-BIT CARRY LOOKAHEAD: G,P-->G,P 10, G,P->C 7, C --> C 10 | 2901A CARRY ---> CONDITION CODES (Z) 50 | - 11 | CONDITION CODE LOGIC SETUP TIME 40

WORKING REG ADDRESS GENERATION (PAL) 40 | - 5 | 2901A A,B ADDRESS ---> G,P 65 | 2901A CARRY --> DATA OUT 30 | - 21 | LS RAM DATA SETUP 5 | LOCAL STORE RAM WRITE PULSE 45

ALU SOURCE CONTROL CODE GENERATION(PAL) 40 | - 25

2901 MULTIPLY CYCLE (MSB)

MULTIPLIER LSB ACCESS 25 | ALU SOURCE CONTROL CODE GENERATION 40 | - 18 | 2901A ALU FUNCTION CTL --> G,P 45 | 32 - BIT CARRY LOOKAHEAD: G,P -> G,P 10, G,P->C 7, C --> C 10 | 2901A CARRY->CONDITION CODES (N, V, C) 30 | SHIFT DATA LOGIC (PAL) 40 | - 20 | 2901A RAM SHIFT IN SETUP 25

CSR DELAY 10 | WORKING REG ADDRESS GENERATION 40 | 2901A A,B ADRS ----> RAM SHIFT OUT 95 | SHIFT DATA LOGIC (PAL) 40 | — 52 | 2901A SHIFT IN SETUP 25

2901 SHIFT/MULTIPLY CYCLE RAM->Q, RAM->RAM

- 5 | 2901A RAM ADDRESS -> Y OUT (BYPASSING ALU) 45 | 100

ACCEL/PORT DATA TRANSFER

MICRO-SEQUENCER PATH

ALU DESTINATION CONTROL CODE GENERATION (ROM, PAL) 60 | 2901A DEST CTL --> Y OUT BYPASSING ALU) 30 | TRANSMIT DATA VALID ON Y-BUS | 220 LS SETUP 5 | LOCAL STORE WRITE PULSE 45

SPECIFIER DECODE

PC (1:0) REG (PAL) 25 | IB BYTE SELECT: GATE 6, DECODER 12, IB BYTE ENABLE 18 | GATE 6 | SPECIFIER ROM ACCESS TIME 60 | MICRO ADDRESS BITS (13:11, 3:0) VALID 133 | MUX 6 | CONTROL STORE ACCESS 132 | CSR SETUP 5

OPCODE DECODE (IRD)

CSR DELAY 10 | IB BYTE SELECT: GATE 6, DECODER 12, IB BYTE ENABLE 18 | IRD ROM ACCESS TIME 70 | - 3

SCTL FIELD DECODE (PAL) 40 | GATE 9 | GATE 6 | µPC OUTPUT ENABLE 25 | LOW INCREMENTER D ->Y 24 | - 5

MICRO ADDRESS BITS (10:4) VALID 161

JUMP INSTRUCTION DECODE (PAL) 40 | µSTACK OUTPUT ENABLE 30 | LOW INCREMENTER D --> C OUT 17 | HIGH INCREMENTER CIN --> D OUT (PAL) 40 | MUX 6 | CONTROL STORE ACCESS 104 | CSR SETUP 5

SKIP/RETURN

µSTACK ADDRESS GENERATION 40 | µSTACK RAM ACCESS TIME 40

T39 SKIP CONDITIONS STABLE | MUX 8 | SKIP CONDITION SELECTION 40 | GATE 6 | LOW INCREMENTER C IN --> C OUT 22

CPU MICROCYCLE TIMING
DATA PATH AND MICRO-SEQUENCER

THIS DRAWING AND SPECIFICATION, THE PROPERTY OF DIGITAL EQUIPMENT CORPORATION, ARE NOT TO BE REPRODUCED IN WHOLE OR IN PART AND ARE NOT TO BE USED OR DISCLOSED EXCEPT AS AUTHORIZED IN WRITING BY DIGITAL EQUIPMENT CORPORATION.

REVISIONS		
C-K	CHANGE NO.	REV

digital

DRN D.M.Hofman | DATE 26-SEP-81 | ENG. | DATE
CHK'D. | DATE | BOARD LOCATION: SHEET 1 OF 1

(362,1500)CRUTC.DRW 26-SEP-81 12:04 NEXT HIGHER ASSEMBLY:

FIRST USED ON OPTION/MODEL: 11/730

TITLE: 11/730 CPU MICROCYCLE TIMING

SIZE D | CODE TD | NUMBER M8390-0-X | REV. A

REV. A | NUMBER M8390-0-X | CODE TD | SIZE D

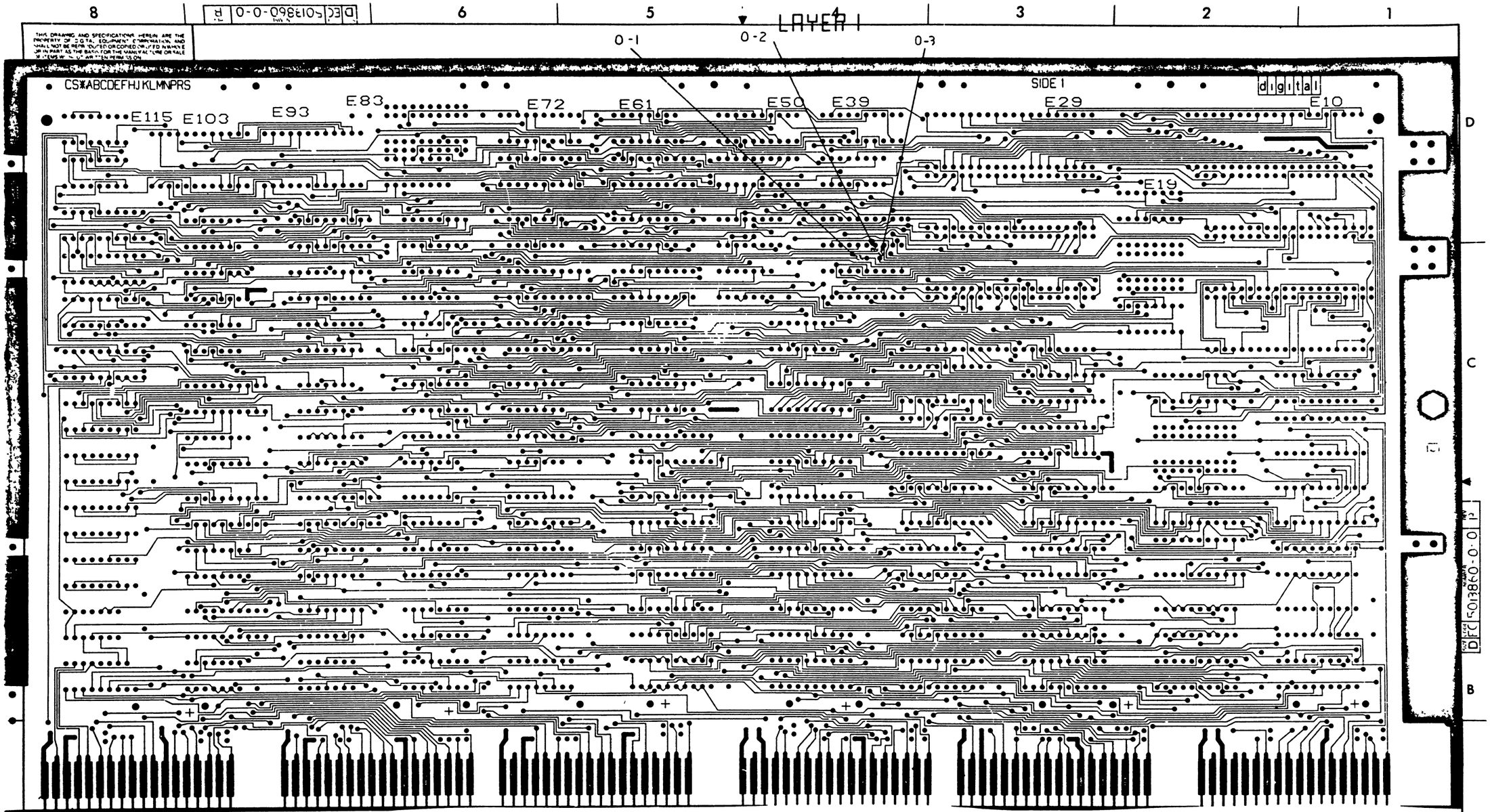

REVISION HISTORY		
DATE	ECO NUMBER	REV
7/11	M8390-TW001	B
	21-OCT-81	
	K. OKIN	
	23-JAN-82	

TITLE digital

ETCH CUT DRAWING

DOCUMENT NUMBER

SIZE D CODE EC NUMBER 5013860-0-0 REV B

SCALE 2-1 SHEET 1 OF 3

DRN 7 Casly DATE 6/17/80

CHK 7 Casly DATE 6/17/80

DES ENG DATE 6/17/80

RESP ENG DATE 7/1/80

MFG ENG DATE

NEXT HIGHER DOC

DRW 102E

THIS DRAWING AND THE SPECIFICATIONS, IDEAS, AND THE PROPERTY OF DIGITAL EQUIPMENT CORPORATION, AND SHALL NOT BE REPRODUCED OR COPIED OR USED IN WHOLE OR IN PART AS THE BASIS FOR THE MANUFACTURE OR SALE OF ITEMS WITHOUT WRITTEN PERMISSION.
COPYRIGHT © 1980 DIGITAL EQUIPMENT CORPORATION

LAYER 4

DAP

M8390 5013860B

REVISION HISTORY		
DATE	ECO NUMBER	REV

TITLE: ETCH CUT DRAWING

DOCUMENT NUMBER			
SIZE	CODE	NUMBER	REV
D	EC	5013860 - 0 - 0	B

SCALE 2 - 1 SHEET 2 OF 2

LAD 1-17A

"THIS DRAWING AND SPECIFICATIONS, HEREIN, ARE THE PROPERTY OF DIGITAL EQUIPMENT CORPORATION AND SHALL NOT BE REPRODUCED OR COPIED OR USED IN WHOLE OR IN PART AS THE BASIS FOR THE MANUFACTURE OR SALE OF ITEMS WITHOUT WRITTEN PERMISSION.
COPYRIGHT © 1980 DIGITAL EQUIPMENT CORPORATION"

REWORK INSTRUCTIONS

ETCH CUTS SIDE 1:

0-1 CUT THE ETCH, ON SIDE ONE, BETWEEN E73-01 AND PTH, BELOW E37-06, ABOVE AND TO THE LEFT OF PTH NEAR E36-15.

0-2 CUT THE ETCH, ON SIDE ONE, BETWEEN E73-03 AND E37-07 NEAR E37-07.

0-3 CUT THE ETCH, ON SIDE ONE, BETWEEN E73-04 AND E37-08 NEAR E37-07.

REVISION HISTORY		
DATE	ECO NUMBER	REV.

TITLE: ETCH CUT DRAWING

DOCUMENT NUMBER			
SIZE	CODE	NUMBER	REV.
D	EC	5013860-0-0	B

SCALE 2-1 SHEET 3 OF 3

TW

SIZE	CODE	NUMBER	REV.
B	DD	M8391-0	C

DRAWING NO.	NO. OF SHTS.	PART NO.	DESCRIPTION	REVISIONS
			MODULE REVISION	A B C
B-DD-M8391-0	1		DRAWING DIRECTORY	A B C
D-UA-M8391-0-0	2		UNIT ASSEMBLY	A B B
K-PL-M8391-0-DBP	3		PARTS LIST	A B C
		5013893	ETCH BOARD	B B B
K-PC-5013893-0-DBC			DESIGN DATA BASE PC BOARD	B B B
D-MD-5013893-0-0	5		MECHANICAL DRAWING	A A B
D-EC-5013893-0-0	3		ETCH CUT DRAWING	A B B
K-CS-M8391-0-DBS			DESIGN DATA BASE SUDS	A B B
D-CS-M8391-0-MCTA	1	*	ARRAY CONTROL	A B B
D-CS-M8391-0-MCTB	1	*	VAR AND ADDRESS DECODERS	A B B
D-CS-M8391-0-MCTC	1	*	TRANSLATION BUFFER	A B B
D-CS-M8391-0-MCTD	1	*	BUS MC DRIVERS, CLOCK GENERATION	A B B
D-CS-M8391-0-MCTE	1	*	ARBITRATOR AND POWER UP/DOWN	A B B
D-CS-M8391-0-MCTF	1	*	CONTROL AND STATUS REGISTERS	A B B
D-CS-M8391-0-MCTH	1	*	UNIBUS ADDRESS XCVRS AND TERMINATOR	A B B
D-CS-M8391-0-MCTJ	1	*	ECC CONTROL	A B B
D-CS-M8391-0-MCTK	1	*	DATA CONTROL AND REFRESH LOGIC	A B B
D-CS-M8391-0-MCTL	1	*	DATA ROTATORS/LATCHES	A B B
D-CS-M8391-0-MCTM	1	*	CONTROL STORE	A B B
D-CS-M8391-0-MCTN	1	*	FILTER CAPACITORS	A B B
D-BD-M8391-0-0	1	*	MEMORY BLOCK DIAGRAM	- A B
D-GL-M8391-0-0	16	*	ROM AND PAL LISTINGS	- A B
D-TD-M8391-0-0	3	*	MEMORY TIMING DIAGRAM	- A B

NOTES:

REVISIONS			
REV.		B	C
CHG NO.		TW001	TW002
DATE		10-81	4-82

"THIS DRAWING AND SPECIFICATIONS, HEREIN, ARE THE PROPERTY OF DIGITAL EQUIPMENT CORPORATION AND SHALL NOT BE REPRODUCED OR COPIED OR USED IN WHOLE OR IN PART AS THE BASIS FOR THE MANUFACTURE OR SALE OF ITEMS WITHOUT WRITTEN PERMISSION.

COPYRIGHT© 1980 DIGITAL EQUIPMENT CORPORATION

digital

USED ON OPTION/MODEL			

DRN.	J. CASEY	8-6-80
CHK'D	J. CASEY	8-6-80
ENG.	K. OKIN	8-8-80
PROD.	C.J. CONSIDINE	8-8-80

TITLE: M C T

SIZE	CODE	NUMBER	REV.
B	DD	M8391-0	C

SHEET 1 OF 2

DRB 126

SIZE	CODE	NUMBER	REV.
B	DD	M8391-0	C

DRAWING NO.	NO. OF SHTS.	PART NO.	DESCRIPTION	REVISIONS
D-FD-M8391-0-0	1		MEMORY FLOW DIAGRAM	A B
D-FD-M8391-0-1	1		MEMORY FLOW DIAGRAM	A B
D-FD-M8391-0-2	1		MEMORY FLOW DIAGRAM	A B
D-FD-M8391-0-3	1		MEMORY FLOW DIAGRAM	A B
D-FD-M8391-0-4	1		MEMORY FLOW DIAGRAM	A B
D-FD-M8391-0-5	1		MEMORY FLOW DIAGRAM	A B
D-FD-M8391-0-6	1		MEMORY FLOW DIAGRAM	A B
D-FD-M8391-0-7	1		MEMORY FLOW DIAGRAM	A B
D-FD-M8391-0-8	1		MEMORY FLOW DIAGRAM	A B
D-FD-M8391-0-9	1		MEMORY FLOW DIAGRAM	A B
D-FD-M8391-0-10	1		MEMORY FLOW DIAGRAM	A B
D-FD-M8391-0-11	1		MEMORY FLOW DIAGRAM	A B
D-FD-M8391-0-12	1		MEMORY FLOW DIAGRAM	A B
D-FD-M8391-0-13	1		MEMORY FLOW DIAGRAM	A B
D-FD-M8391-0-14	1		MEMORY FLOW DIAGRAM	A B
D-FD-M8391-0-15	1		MEMORY FLOW DIAGRAM	A B
D-FD-M8391-0-16	1		MEMORY FLOW DIAGRAM	A B
D-FD-M8391-0-17	1		MEMORY FLOW DIAGRAM	A B
D-FD-M8391-0-18	1		MEMORY FLOW DIAGRAM	A B
D-FD-M8391-0-19	1		MEMORY FLOW DIAGRAM	A B
D-FD-M8391-0-20	1		MEMORY FLOW DIAGRAM	A B
D-FD-M8391-0-21	1		MEMORY FLOW DIAGRAM	A B

NOTES:

REVISIONS		
REV.	B	C
CHG NO.	TW001	TWC02
DATE	1-82	2-82

"THIS DRAWING AND SPECIFICATIONS, HEREIN, ARE THE PROPERTY OF DIGITAL EQUIPMENT CORPORATION AND SHALL NOT BE REPRODUCED OR COPIED OR USED IN WHOLE OR IN PART AS THE BASIS FOR THE MANUFACTURE OR SALE OF ITEMS WITHOUT WRITTEN PERMISSION.

COPYRIGHT© DIGITAL EQUIPMENT CORPORATION

digital

USED ON OPTION/MODEL			

DRN.	J. CASEY	8-6-80
CHK'D	J. CASEY	8-6-80
ENG.	K. OKIN	8-8-80
PROD.	C. CONSIDINE	8-8-80

TITLE: M C T

SIZE	CODE	NUMBER	REV.
B	DD	M8391-0	C

SHEET 2 OF 2

DRB 126

TW

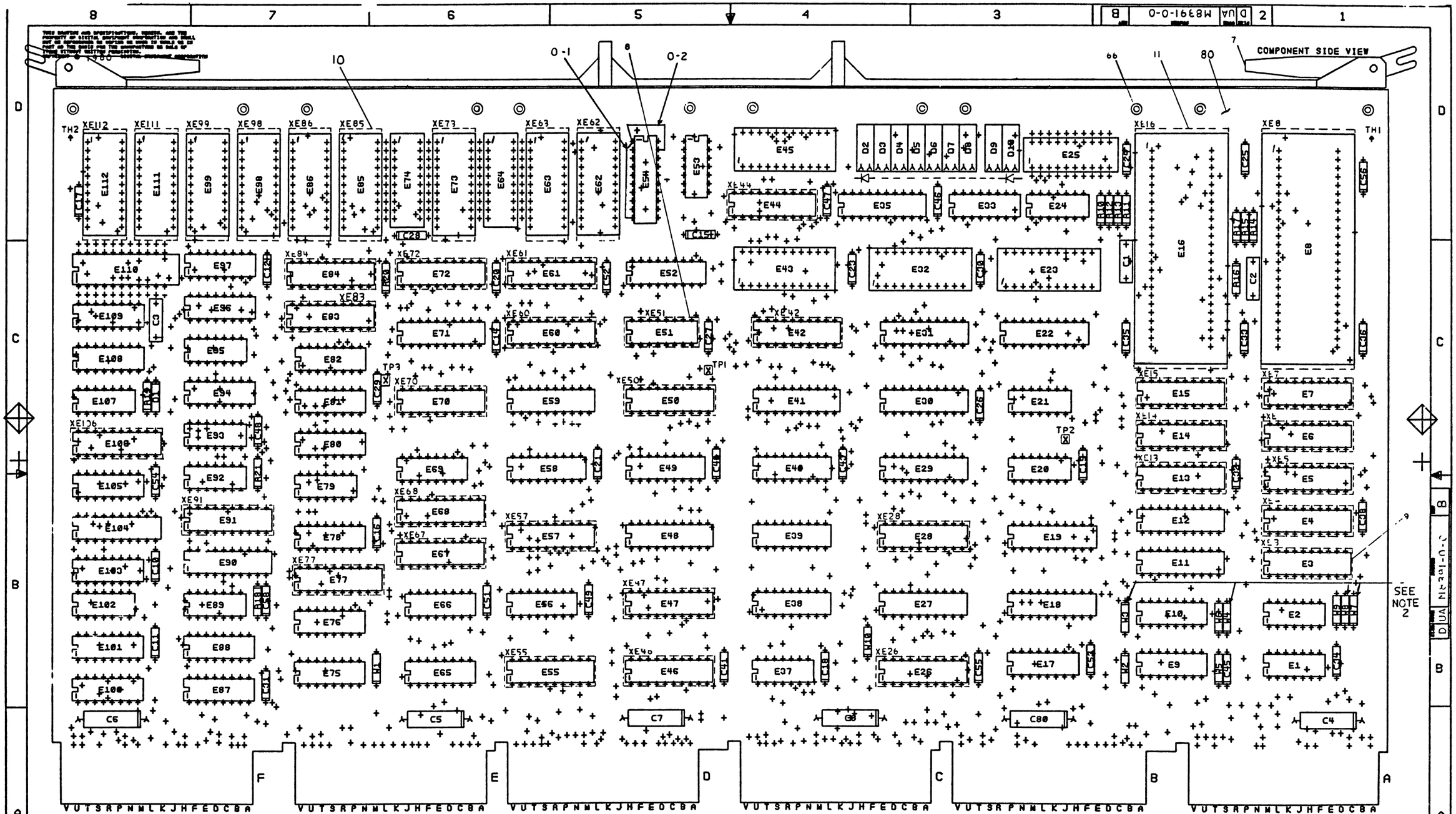

NOTES:
1. SPARE LOCATIONS ARE E25, E64, E74, E110.
2. W1, W2, W4, W5, W7, AND W8 ARE NOT INSTALLED.

STEP & REPEAT	↑ Y AXIS 0 STEP 0 TIMES
	→ X AXIS 0 STEP 0 TIMES

CHK	CHANGE NO	REV
	M8391-TW001	B
	K. OKIN	

ETCH REV.	B
DATA BASE REV.	B

SIGNATURES	DATE
DRN.	
CHK'D. E.T. GE-[illegible]	6-5-80
MECH. ENG. [illegible]	6-8-80
PROJ. ENG. [illegible]	[illegible]
PROD. [illegible]	[illegible]
SCALE 2/1	
SHT. 1 OF 2	
NEXT HIGHER ASSY. B-DD-M8391-0-0	

digital

TITLE MCT

SIZE	CODE	NUMBER	REV
D	UA	M8391-0-0	B

TW 1 MS# 17016-B

THIS DRAWING AND SPECIFICATIONS, HEREIN, ARE THE PROPERTY OF DIGITAL EQUIPMENT CORPORATION AND SHALL NOT BE REPRODUCED OR COPIED OR USED IN WHOLE OR IN PART AS THE BASIS FOR THE MANUFACTURE OR SALE OF ITEMS WITHOUT WRITTEN PERMISSION.
COPYRIGHT © 1980 DIGITAL EQUIPMENT CORPORATION

REWORK INSTRUCTIONS

WIRE ADDS SIDE 1:

0-1 FROM E54-1 TO E54-10

0-2 FROM E54-1 TO E54-19

~~0-3 FROM E53-1 TO E91-11~~

~~0-4 FROM E53-2 TO E105-7~~

~~0-5 FROM E53-3 TO E108-12~~

ECO# M8391-TW001

1-1 STEPS 0-3 THROUGH 0-5 HAVE BEEN REMOVED AS PER ECO M8391-TW001.

DUA M8391-0-0 B

REVISION HISTORY

DATE	ECO NUMBER	REV.

TITLE: M C T

SIZE	CODE	DOCUMENT NUMBER	REV.
D	UA	M8391-0-0	B

SCALE 2-1 SHEET 2 OF 2

AUTOMATED BY PRTLST.3M(41) — P A R T S L I S T — SHEET A1 OF A3

LINE	ITEM	DOCUMENT NUMBER	PART NUMBER	DESCRIPTION	QTY PER VARIATION 00	REFERENCE DESIGNATOR
1	80	D-MD-5013893-0-0	5013893-00	NEBULA MCT	1	
2	79		1000064-00	3.9MFD 10V 10% S.TANT	1	C3
3	2		1012084-01	8 MFD 25V +75-10% AL EL	6	C4-C8,C80
4	3		1012784-00	.047 MFD 50V +80-20% CER	41	C10-C12,C14-C21,C23-C36,C38,C40,
					CONT	C41,C43,C45-C49,C51-C56,C58
5	4		1013466-11	.22 MFD 50V +80-20% Z5U CER	2	C1,C2
6	5		1105796-00	1N 4004 PIV=400 I= 1A D041 SP	1	D1
7	6		1112689-00	LED .8MCD@16MA VF=5V	9	D2-D10
8	8		1215006-02	SKT,IC 16PIN DIP TIN PLATE	1	XE51
9	9		1215006-04	SKT,IC 20PIN DIP TIN PLATE	28	XE3-XE7,XE13-XE15,XE25,XE28,
					CONT	XE42,XE44,XE46,XE47,XE50,XE55,
					CONT	XE57,XE60,XE61,XE67,XE68,XE70,
					CONT	XE72,XE77,XE83,XE84,XE91,XE106
10	10		1215006-05	SKT,IC 22PIN DIP TIN PLATE	9	XE62,XE63,XE73,XE85,XE86,XE98,
					CONT	XE99,XE111,XE112
11	11		1215924-00	SKT,IC 48PIN DIP GOLD PLATE	2	XE8,XE16
12	12	SEE NOTE 1	1215935-00	GASKET, THERMAL .50"X.80"	2	
13	13	SEE NOTE 2	1215936-00	HEAT SINK, FORCED CONVECTION	2	
14	7		1216988-02	HANDLE,MODULE,HEX TWO EJECTORS	1	
15	14		1300229-00	100.0 .25 W 5.0 % CC	3	R18,R20,R21
16	16		1302377-00	39.0 .25 W 5.0 % CC	8	R10-R17
17	15		1302514-00	39.0 K .25 W 5.0 % CC	1	R19
18	69		1311003-02	R NETWORK 14-330 14-680 16PIN	1	E65
19	17		1312628-00	R NETWORK 14-176.5 14-375 16PIN	4	E56,E78,E88,E100
20	18		1616322-00	DELAY= 75NS,5TAPS	1	E2
21	19		1910532-00	74S00 NAND GATE-QUAD 2IN	1	E93
22	20		1910534-00	74S04 INVERTER GATE-HEX 1I	2	E79,E102
23	21		1910548-00	74S157 MUX 1 OF 2 (QUAD)	1	E69
24	22		1910549-00	74S158 MUX 1 OF 2 (QUAD)	1	E97
25	23		1910550-00	74S174 FF-D HEX	1	E105

REVISION HISTORY			BASIC PART NO: M8391										
ENG	ECO NUMBER	REV	SECTION A OF A	DRN: J.FERGUSON	DATE: 14-MAR-80		D	I	G	I	T	A	L
---	INITIAL	A	SECTION.VARIATION INDEX	CHK'D: E.T.GERRY	DATE: 14-MAR-80	TITLE	PARTS LIST						
KO	M8391-TW001	B	[A] 00			MCT							
			[B]	DES.ENG: K.OKIN	DATE: 22-APR-80								
			[C]										
			[D]			DOCUMENT NUMBER							
			[E]	RESP.ENG.: K.OKIN	DATE: 22-APR-80								
			[F]			SIZE	CODE	NUMBER				REV	
			[H]										
			[J]	MFG.ENG.: J.CONSIDINE	DATE: 8-AUG-80	K	PL	M8391-0-DBP				B	
			[K]										
			[L]	ASSEMBLY NUMBER:	TOP DOCUMENT NUMBER:			FILE NAME:				EDIT #	
			[M]	D-UA-M8391-0-0	B-DD-M8391-0-0			Z1270B.PLS				17	
			[N]										

"THIS DRAWING AND SPECIFICATIONS HEREIN, ARE THE PROPERTY OF DIGITAL EQUIPMENT CORPORATION AND SHALL NOT BE REPRODUCED OR COPIED OR USED IN WHOLE OR IN PART AS THE BASIS FOR THE MANUFACTURE OR SALE OF ITEMS WITHOUT WRITTEN PERMISSION.
COPYRIGHT (C) 1982. DIGITAL EQUIPMENT CORPORATION "

AUTOMATED BY PRTLST.3M(41)

P A R T S L I S T

LINE	ITEM	DOCUMENT NUMBER	PART NUMBER	DESCRIPTION	QTY PER VARIATION 00	REFERENCE DESIGNATOR
26	24		1910956-00	74S151 MUX 1 OF 8	4	E94,E96,E108,E109
27	25		1911116-00	DEC 8837 RECEIVER,BUS,HEX,UN	1	E101
28	26		1911573-00	74S280 PARITY GEN/CHKR,9BIT	2	E20,E21
29	27		1911579-00	8641 TRANSCEIVER,BUS,QUA	7	E66,E75,E76,E80,E81,E87,E103
30	28		1911641-00	SN 74S257 MUX,QUAD 2 TO 1	3	E9,E10,E17
31	29		1911676-00	74S139 DECODER-DUAL TWO-INP	1	E82
32	30		1911712-00	74S51 AND-OR GATE-INVERT D	1	E107
33	31		1912388-00	74S02 NOR GATE-QUAD 2IN,PO	2	E24,E95
34	32		1912389-00	74S08 AND GATE-QUAD 2IN,PO	2	E53,E92
35	33		1912697-00	LS174 FF-D HEX W/CLEAR	1	E33
36	34		1912746-00	DEC 74S37 NAND GATE-QUAD 2IN	1	E37
37	35		1912799-00	LS00 NAND-GATE-QUAD 2IN,P	1	E89
38	36		1913670-00	74S373 LATCH 8BIT TRASP TR	2	E59,E71
39	37		1913671-00	74S374 FF-D OCTAL TRISTATE	2	E90,E104
40	38		1913888-00	DC 102A EQUALS CHECKER 8BIT	2	E30,E35
41	39		1914214-00	LS374 FF-D OCTAL EDGE TRIG	2	E11,E12
42	40		1914705-00	DC 631B BIPOLAR,LS,400-GATE	2	E8,E16
43	41		1915019-00	74S38 NAND BUFFER-QUAD 2IN	1	E1
44	42		1915193-00	LS244 DRIVER,LINE,OCTAL,T	6	E18,E19,E22,E27,E31,E54
45	43		1915218-00	LS245 TRANSCEIVER,BUS,OCT	3	E29,E41,E48
46	44		1915697-00	RAM 256X4 TRI-STATE	4	E23,E32,E43,E45
47	45		2116957-02	1K MOS RAM 70NS 1	6	E38-E40,E49,E52,E53
48	46		23946A9-00	A9-01	1	E51
49	48		23003K5-00	K5-01	1	E77
50	49		23005K4-00	K4-01	1	E42
51	50		23006K4-00	K4-01	1	E72
52	51		23007K4-00	K4-01	1	E29
53	52		23008K4-00	K4-01	1	E83
54	53		23010K4-00	K4-01 PAL,ARRA	1	E57
55	70		23032D2-00	D2-01	1	E99
56	71		23033D2-00	D2-01	1	E112
57	72		23034D2-00	D2-01	1	E85
58	73		23035D2-00	D2-01	1	E62
59	54		23017K3-00	K3-01 PAL,REG, CONT	8	E3-E7,E13-E15
60	74		23036D2-00	D2-01	1	E98
61	55		23018K3-00	K3-01 PAL,REG, CONT	2	E47,E50
62	75		23037D2-00	D2-01	1	E63
63	56		23019K3-00	K3-01 PAL,REG, CONT	3	E26,E67,E70
64	76		23038D2-00	D2-01	1	E86
65	57		23026K3-00	K3-01 PAL,REG, CONT	1	E60
66	77		23039D2-00	D2-01	1	E73
67	58		23056K3-00	K3-01 PAL,REG CONT	1	E91
68	78		23040D2-00	D2-01	1	E111
69	59		23060K3-00	K3-01 PAL,REG, CONT	1	E68
70	60		23023K3-00	K3-01 PAL,REG, CONT	1	E106
71	61		23061J5-00	J5-01 PAL,LOGIC,CONT	1	E61
72	62		23025J5-00	J5-01 PAL,LOGIC,CONT	1	E44
73	63		23042J5-00	J5-01 PAL,LOGIC,CONT	1	E46

DIGITAL	TITLE	SIZE	CODE	DOCUMENT NUMBER	REV
	MCT SECTION A OF A	K	PL	M8391-0-DBP	B

LINE	ITEM	DOCUMENT NUMBER	PART NUMBER	DESCRIPTION	QTY PER VARIATION 00	REFERENCE DESIGNATOR
74	64		23043J5-00	J5-01 PAL,LOGIC,CONT	1	E55
75	65		23044J5-00	J5-01 PAL,LOGIC,CONT	1	E84
76	66		9009000-00	EYELET,ROLL FLANGE .121ODX.156	12	
77	67		9009149-00	PIN, STAKING, P.C. BOARD, .025 X	3	TP1-TP3
78	68		9009185-00	JUMPER, WIRE, INSULATED, BLACK B	4	W3,W5,W9,W10
79	81		9105740-55	WIRE(WRAP)30AWG UL1423	A/R	

80 NOTE: NOTE 1 ITEM 12 USED IN REF DES E8,E16
81 NOTE: NOTE 2 ITEM 13 USED IN REF DES E8,E16

########## RELEASABLE/NO REF DES CHECK ##########

DIGITAL	TITLE	SIZE	CODE	DOCUMENT NUMBER	REV
	MCT	K	PL	M8391-0-DBP	B
	SECTION A OF A				

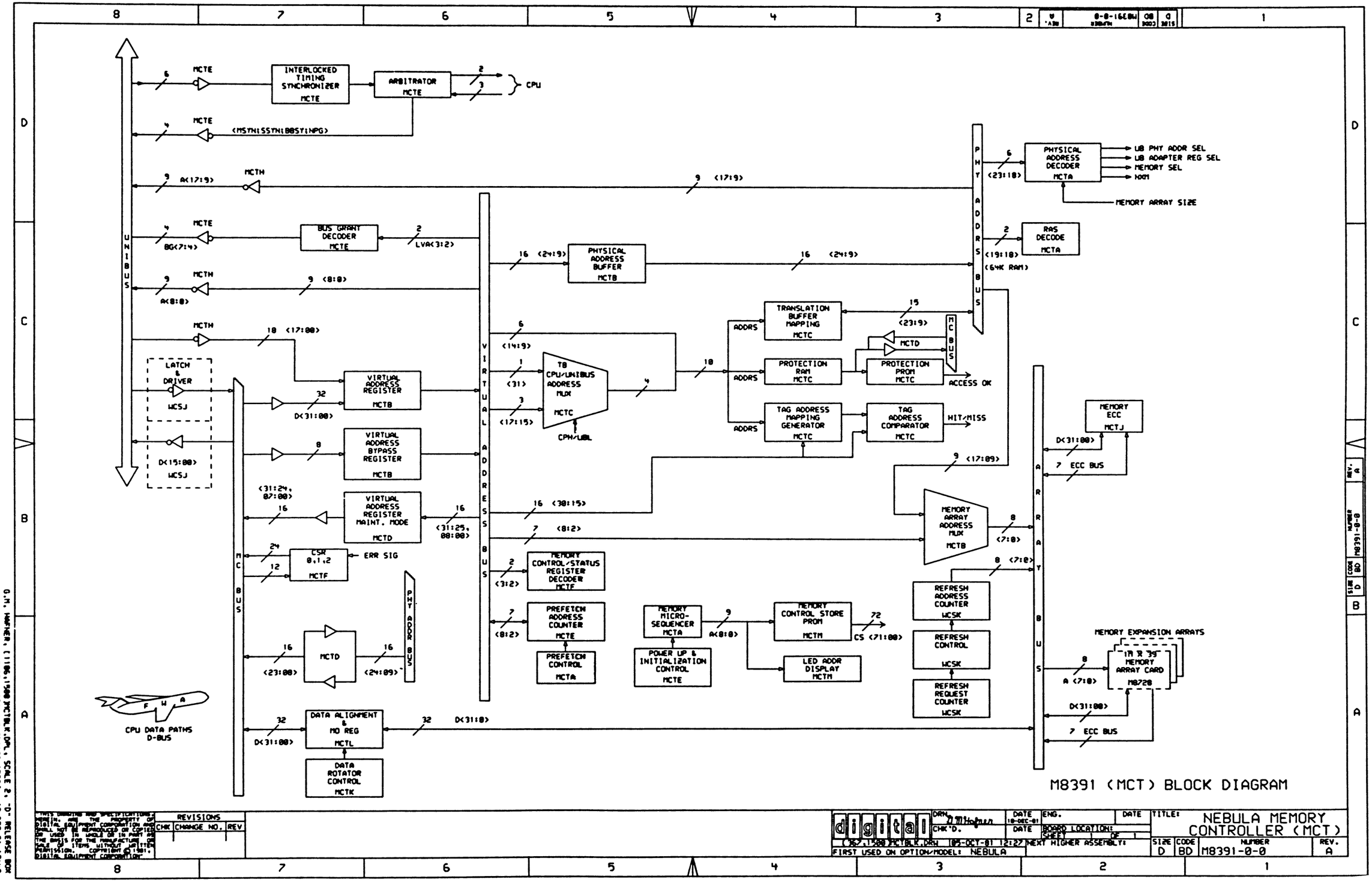

M8391 (MCT) BLOCK DIAGRAM

THIS DRAWING AND SPECIFICATIONS, HEREIN, ARE THE PROPERTY OF DIGITAL EQUIPMENT CORPORATION AND SHALL NOT BE REPRODUCED OR COPIED OR USED IN WHOLE OR IN PART AS THE BASIS FOR THE MANUFACTURE OR SALE OF ITEMS WITHOUT WRITTEN PERMISSION. COPYRIGHT © 1981, DIGITAL EQUIPMENT CORPORATION.

REVISIONS		
CHK	CHANGE NO.	REV

digital

DRN. D.M.Hafner DATE 10-DEC-81 ENG. DATE
CHK'D. DATE BOARD LOCATION: SHEET 1 OF 1
(367,1500)MCTBLK.DRW 05-OCT-81 12:27 NEXT HIGHER ASSEMBLY:
FIRST USED ON OPTION/MODEL: NEBULA

TITLE: NEBULA MEMORY CONTROLLER (MCT)

SIZE	CODE	NUMBER	REV.
D	BD	M8391-0-0	A

G.M. HAFNER, [1106,1500]MCTBLK.DPL, SCALE 2, "D" RELEASE BOX
G.M. HAFNER MCTBLK.PLO[1106,1500] 10-DEC-81 17:42

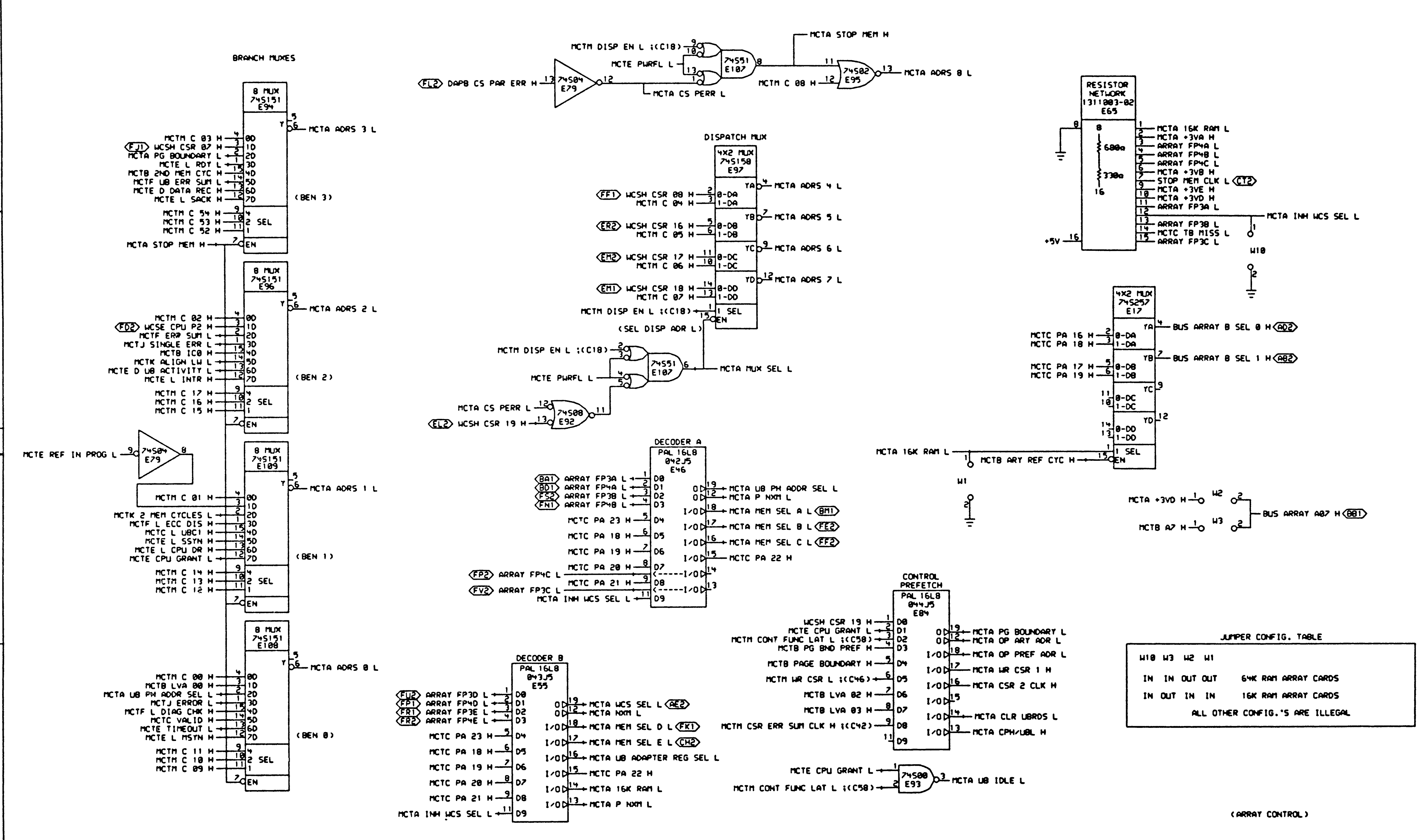

THIS DRAWING AND SPECIFICATIONS, HEREIN, ARE THE PROPERTY OF DIGITAL EQUIPMENT CORPORATION AND SHALL NOT BE REPRODUCED OR COPIED OR USED IN WHOLE OR IN PART AS THE BASIS FOR THE MANUFACTURE OR SALE OF ITEMS WITHOUT WRITTEN PERMISSION. COPYRIGHT © 1981, DIGITAL EQUIPMENT CORPORATION

REVISIONS		
CHK	CHANGE NO.	REV

digital

DRN. D M Hafner — DATE 27-OCT-81 — ENG. — DATE

CHK'D. — DATE — BOARD LOCATION: — SHEET 1 OF 1

(367,1500)MCTA.DRW 27-OCT-81 10:52 — NEXT HIGHER ASSEMBLY:

FIRST USED ON OPTION/MODEL: 11/730

TITLE: NEBULA MEMORY CONTROLLER (MCTA)

SIZE	CODE	NUMBER	REV.
D	CS	M8391-0-MCTA	B

G.M. HAFNER, [1106,1500]MCTA.DPL, SCALE 2, "D" RELEASE BOX
G.M. HAFNER MCTA.PLO[1106,1500] 27-OCT-81 11:39

VAR LOAD	VAR MUX SEL	FUNCTION
L	L	NOP
L	H	INCR VAR
H	L	LOAD MC BUS
H	H	LOAD UNIBUS

(V.A.R. IS E26,E47,E50,E70,E67,E28, & E42)

(VIRTUAL ADDRESS REGISTER)

(VAR BYPASS REGISTER)

(VIRTUAL ADDR REGISTER & ADDR DECODERS)

THIS DRAWING AND SPECIFICATIONS, AS AN UNPUBLISHED WORK, ARE THE PROPERTY OF DIGITAL EQUIPMENT CORPORATION AND SHALL NOT BE REPRODUCED OR COPIED OR USED IN WHOLE OR IN PART AS THE BASIS FOR THE MANUFACTURE OR SALE OF ITEMS WITHOUT WRITTEN PERMISSION. COPYRIGHT © 1981, DIGITAL EQUIPMENT CORPORATION

REVISIONS		
CHK	CHANGE NO.	REV

DRN	DATE 27-OCT-81	ENG.	DATE	TITLE: NEBULA MEMORY CONTROLLER (MCTB)
CHK'D.	DATE	BOARD LOCATION:		
		SHEET OF		
(SX)1500 MCTB.DRW	22-OCT-81 10:52	NEXT HIGHER ASSEMBLY:		SIZE D · CODE CS · NUMBER M8391-0-MCTB · REV. B
FIRST USED ON OPTION/MODEL: 11/730				

G.M. MARCH 1981 MCTB.PLOT 22-OCT-81 10:52 BOM REVISED

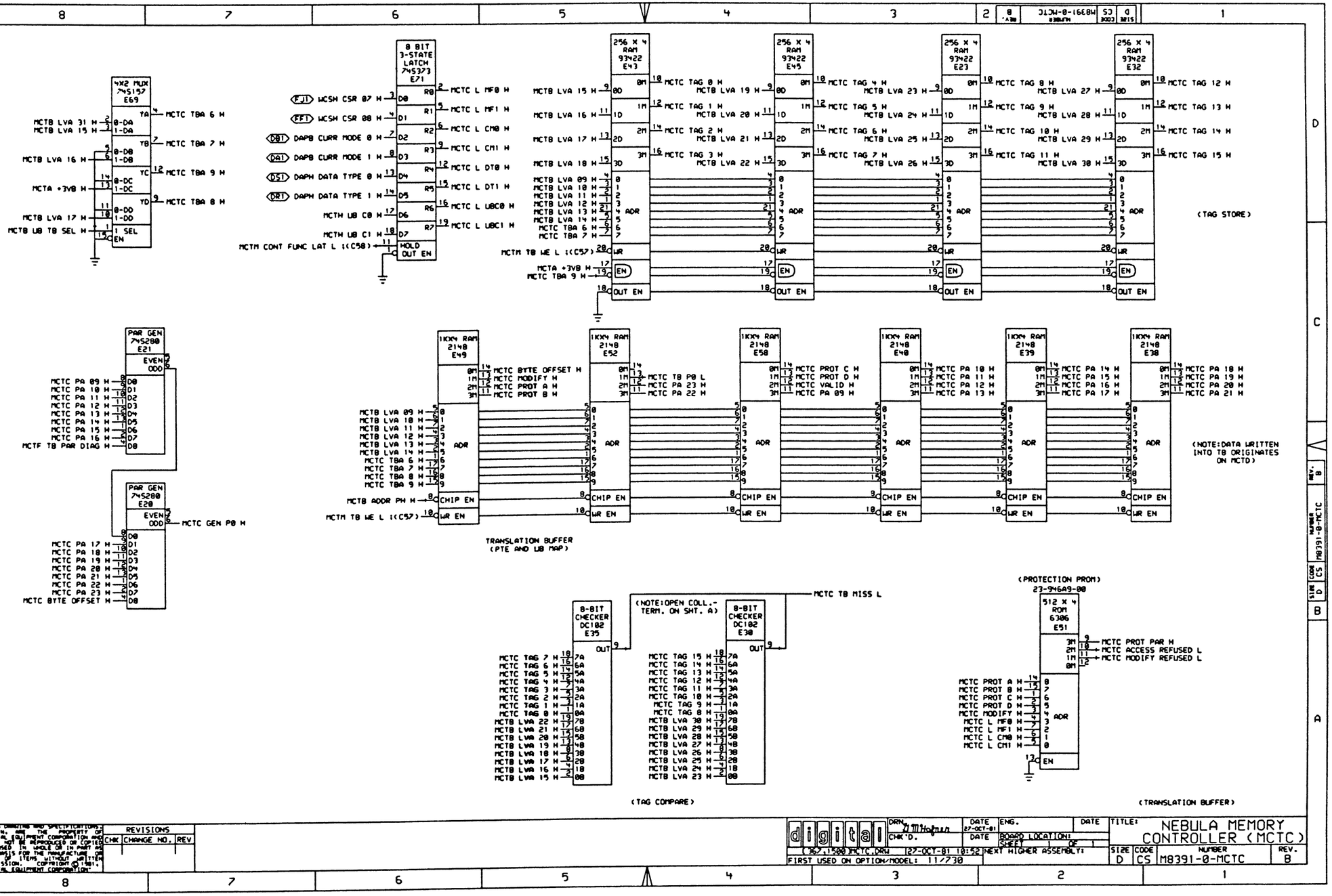
4X2 MUX 74S157 E69
MCTB LVA 31 H
MCTB LVA 15 H
MCTB LVA 16 H
MCTA +3V8 H
MCTB LVA 17 H
MCTB LB TB SEL H
MCTC TBA 6 H
MCTC TBA 7 H
MCTC TBA 9 H
MCTC TBA 8 H
8 BIT 3-STATE LATCH 74S373 E71
FJ1 WCSH CSR 07 H
FF1 WCSH CSR 08 H
DB1 DAPB CURR MODE 0 H
DA1 DAPB CURR MODE 1 H
DS1 DAPH DATA TYPE 0 H
DR1 DAPH DATA TYPE 1 H
MCTM UB C0 H
MCTM UB C1 H
MCTM CONT FUNC LAT L ;(C58)
MCTC L MF0 H
MCTC L MF1 H
MCTC L CM0 H
MCTC L CM1 H
MCTC L DT0 H
MCTC L DT1 H
MCTC L UBC0 H
MCTC L UBC1 H
256 X 4 RAM 93422 E43
256 X 4 RAM 93422 E45
256 X 4 RAM 93422 E23
256 X 4 RAM 93422 E32
MCTB LVA 15 H
MCTB LVA 16 H
MCTB LVA 17 H
MCTB LVA 18 H
MCTB LVA 09 H
MCTB LVA 10 H
MCTB LVA 11 H
MCTB LVA 12 H
MCTB LVA 13 H
MCTB LVA 14 H
MCTC TBA 6 H
MCTC TBA 7 H
MCTM TB WE L ;(C57)
MCTA +3V8 H
MCTC TBA 9 H
MCTC TAG 0 H
MCTC TAG 1 H
MCTC TAG 2 H
MCTC TAG 3 H
MCTB LVA 19 H
MCTB LVA 20 H
MCTB LVA 21 H
MCTB LVA 22 H
MCTC TAG 4 H
MCTC TAG 5 H
MCTC TAG 6 H
MCTC TAG 7 H
MCTB LVA 23 H
MCTB LVA 24 H
MCTB LVA 25 H
MCTB LVA 26 H
MCTC TAG 8 H
MCTC TAG 9 H
MCTC TAG 10 H
MCTC TAG 11 H
MCTB LVA 27 H
MCTB LVA 28 H
MCTB LVA 29 H
MCTB LVA 30 H
MCTC TAG 12 H
MCTC TAG 13 H
MCTC TAG 14 H
MCTC TAG 15 H
(TAG STORE)
PAR GEN 74S280 E21
PAR GEN 74S280 E20
MCTC PA 09 H
MCTC PA 10 H
MCTC PA 11 H
MCTC PA 12 H
MCTC PA 13 H
MCTC PA 14 H
MCTC PA 15 H
MCTC PA 16 H
MCTF TB PAR DIAG H
MCTC PA 17 H
MCTC PA 18 H
MCTC PA 19 H
MCTC PA 20 H
MCTC PA 21 H
MCTC PA 22 H
MCTC PA 23 H
MCTC BYTE OFFSET H
MCTC GEN PB H
1KX4 RAM 2148 E49
1KX4 RAM 2148 E52
1KX4 RAM 2148 E58
1KX4 RAM 2148 E40
1KX4 RAM 2148 E39
1KX4 RAM 2148 E38
MCTC BYTE OFFSET H
MCTC MODIFY H
MCTC PROT A H
MCTC PROT B H
MCTC TB PB L
MCTC PA 23 H
MCTC PA 22 H
MCTC PROT C H
MCTC PROT D H
MCTC VALID H
MCTC PA 09 H
MCTC PA 10 H
MCTC PA 11 H
MCTC PA 12 H
MCTC PA 13 H
MCTC PA 14 H
MCTC PA 15 H
MCTC PA 16 H
MCTC PA 17 H
MCTC PA 18 H
MCTC PA 19 H
MCTC PA 20 H
MCTC PA 21 H
MCTB ADDR PH H
MCTM TB WE L ;(C57)
(NOTE:DATA WRITTEN INTO TB ORIGINATES ON MCTD)
TRANSLATION BUFFER (PTE AND UB MAP)
8-BIT CHECKER DC102 E35
8-BIT CHECKER DC102 E30
(NOTE:OPEN COLL.- TERM. ON SHT. A)
MCTC TB MISS L
MCTC TAG 7 H
MCTC TAG 6 H
MCTC TAG 5 H
MCTC TAG 4 H
MCTC TAG 3 H
MCTC TAG 2 H
MCTC TAG 1 H
MCTC TAG 0 H
MCTB LVA 22 H
MCTB LVA 21 H
MCTB LVA 20 H
MCTB LVA 19 H
MCTB LVA 18 H
MCTB LVA 17 H
MCTB LVA 16 H
MCTB LVA 15 H
MCTC TAG 15 H
MCTC TAG 14 H
MCTC TAG 13 H
MCTC TAG 12 H
MCTC TAG 11 H
MCTC TAG 10 H
MCTC TAG 9 H
MCTC TAG 8 H
MCTB LVA 30 H
MCTB LVA 29 H
MCTB LVA 28 H
MCTB LVA 27 H
MCTB LVA 26 H
MCTB LVA 25 H
MCTB LVA 24 H
MCTB LVA 23 H
(TAG COMPARE)
(PROTECTION PROM)
23-946A9-00
512 X 4 ROM 6306 E51
MCTC PROT PAR H
MCTC ACCESS REFUSED L
MCTC MODIFY REFUSED L
MCTC PROT A H
MCTC PROT B H
MCTC PROT C H
MCTC PROT D H
MCTC MODIFY H
MCTC L MF0 H
MCTC L MF1 H
MCTC L CM0 H
MCTC L CM1 H
(TRANSLATION BUFFER)
REVISIONS
CHK
CHANGE NO.
REV
digital
NEBULA MEMORY CONTROLLER (MCTC)
SIZE D
CODE CS
NUMBER M8391-0-MCTC
REV. B
FIRST USED ON OPTION/MODEL: 11/730
NEXT HIGHER ASSEMBLY:
27-OCT-81 10:52
M8391-0-MCTC

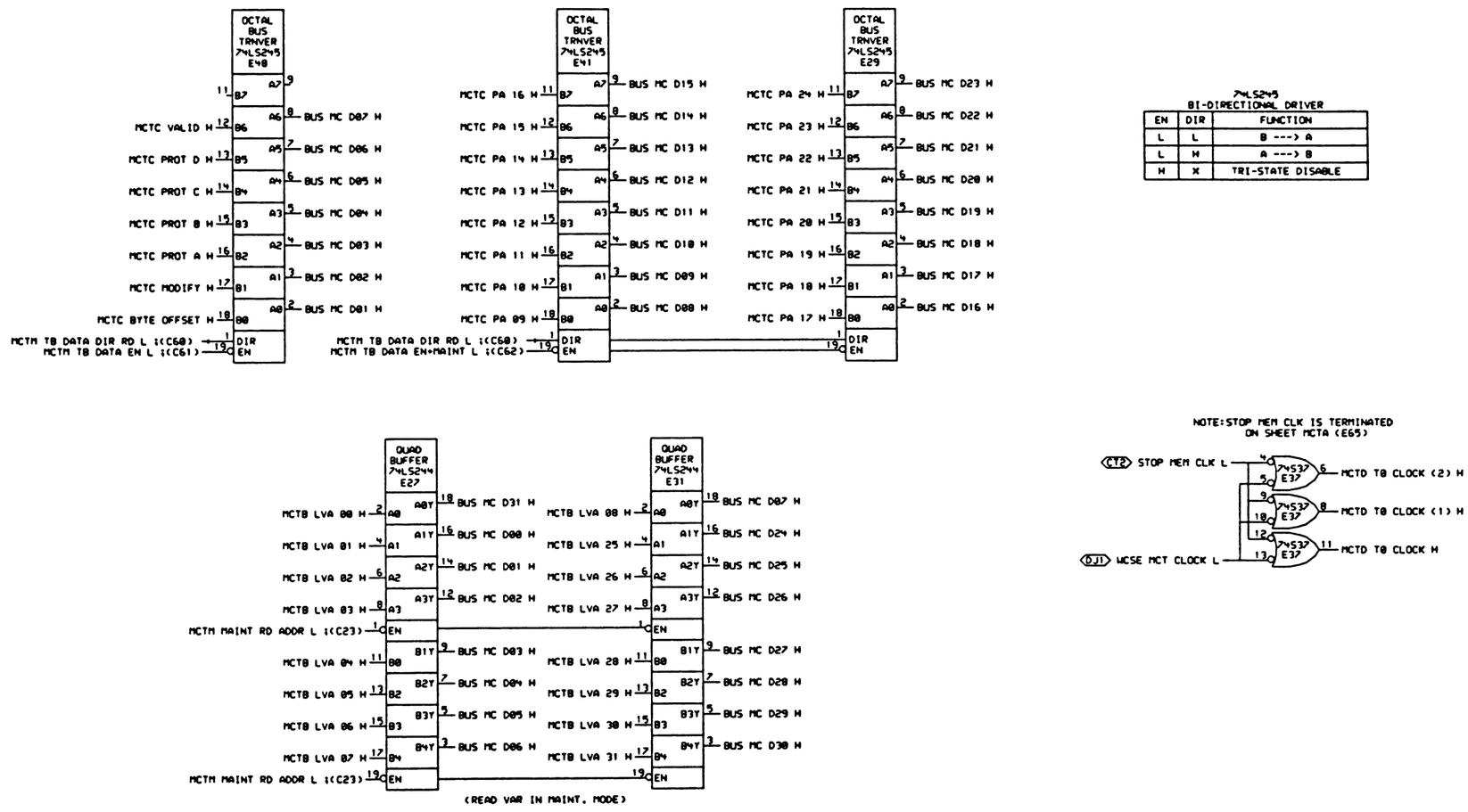

74LS245
BI-DIRECTIONAL DRIVER

EN	DIR	FUNCTION
L	L	B ---> A
L	H	A ---> B
H	X	TRI-STATE DISABLE

"THIS DRAWING AND SPECIFICATIONS HEREIN, ARE THE PROPERTY OF DIGITAL EQUIPMENT CORPORATION AND SHALL NOT BE REPRODUCED OR COPIED OR USED IN WHOLE OR IN PART AS THE BASIS FOR THE MANUFACTURE OR SALE OF ITEMS WITHOUT WRITTEN PERMISSION. COPYRIGHT © 1981, DIGITAL EQUIPMENT CORPORATION"

REVISIONS		
CHK	CHANGE NO.	REV

digital

DRN. D.M.Hafner DATE 27-OCT-81 ENG. DATE
CHK'D. DATE BOARD LOCATION: SHEET 1 OF 1
(367,1500)MCTD.DRW 27-OCT-81 10:52 NEXT HIGHER ASSEMBLY:
FIRST USED ON OPTION/MODEL: 11/730

TITLE: NEBULA MEMORY CONTROLLER (MCTD)

SIZE	CODE	NUMBER	REV.
D	CS	M8391-0-MCTD	B

G.M. HAFNER, [1106,1500]MCTD.DPL, SCALE 2, "D" RELEASE BOX
G.M. HAFNER MCTD.PLO[1106,1500] 27-OCT-81 11:40

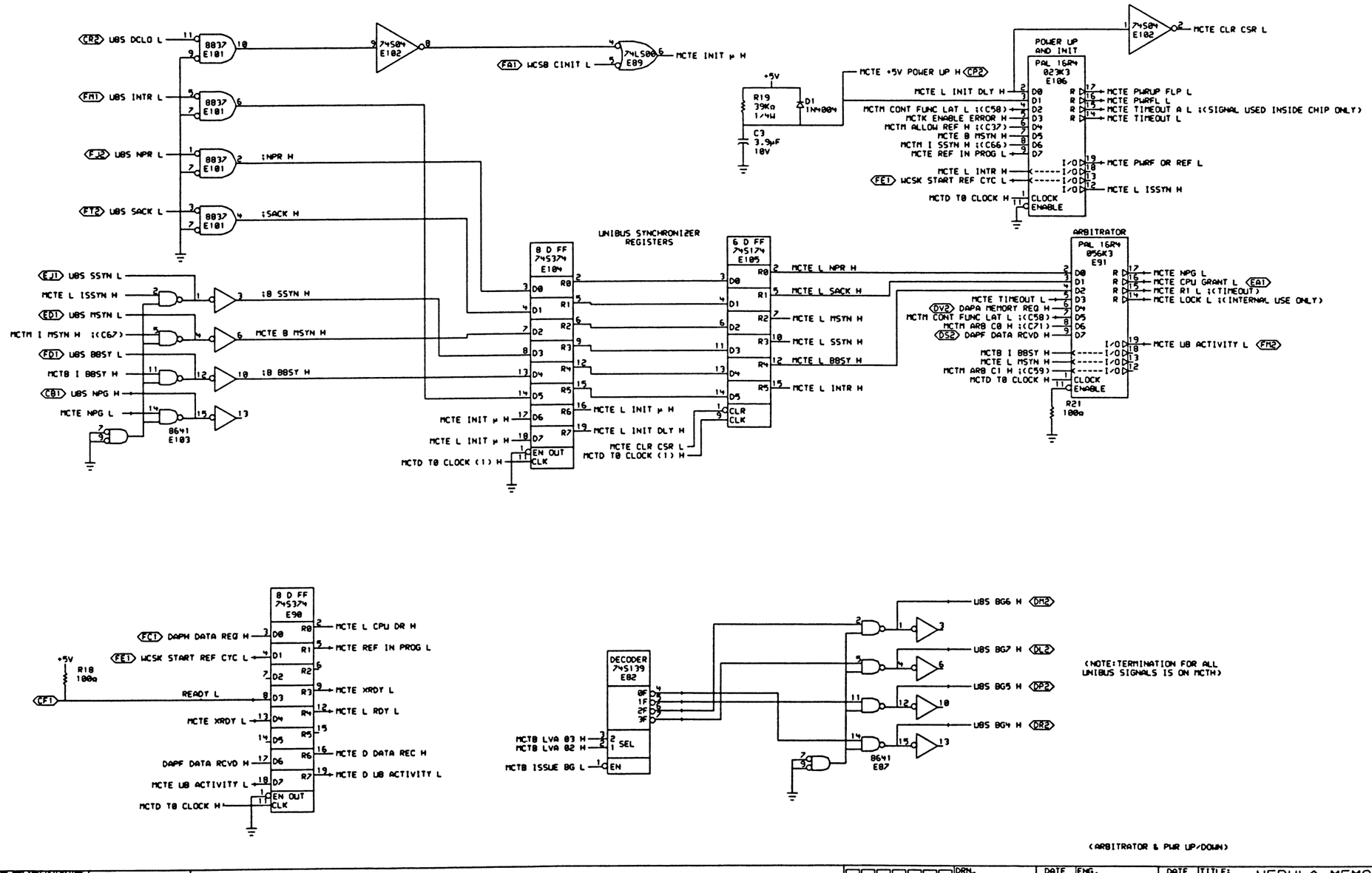

THIS DRAWING AND SPECIFICATIONS, AS AN UNPUBLISHED WORK, ARE THE PROPERTY OF DIGITAL EQUIPMENT CORPORATION AND SHALL NOT BE REPRODUCED OR COPIED OR USED IN WHOLE OR IN PART AS THE BASIS FOR THE MANUFACTURE OR SALE OF ITEMS WITHOUT WRITTEN PERMISSION. COPYRIGHT © 1981, DIGITAL EQUIPMENT CORPORATION.

REVISIONS		
CHK	CHANGE NO.	REV

DRN	DATE	ENG.	DATE	TITLE: NEBULA MEMORY CONTROLLER (MCTE)
CHK'D.	DATE	BOARD LOCATION: SHEET OF		
262,1500 MCTE.DRW	27-OCT-81 10:52	NEXT HIGHER ASSEMBLY:		SIZE D / CODE CS / NUMBER M8391-0-MCTE / REV. B
FIRST USED ON OPTION/MODEL: 11/730				

MACRO: [11,96,500]MCTE.PLT;5 SCALE: 2.0 RELEASED 22-OCT-81 10:41:08

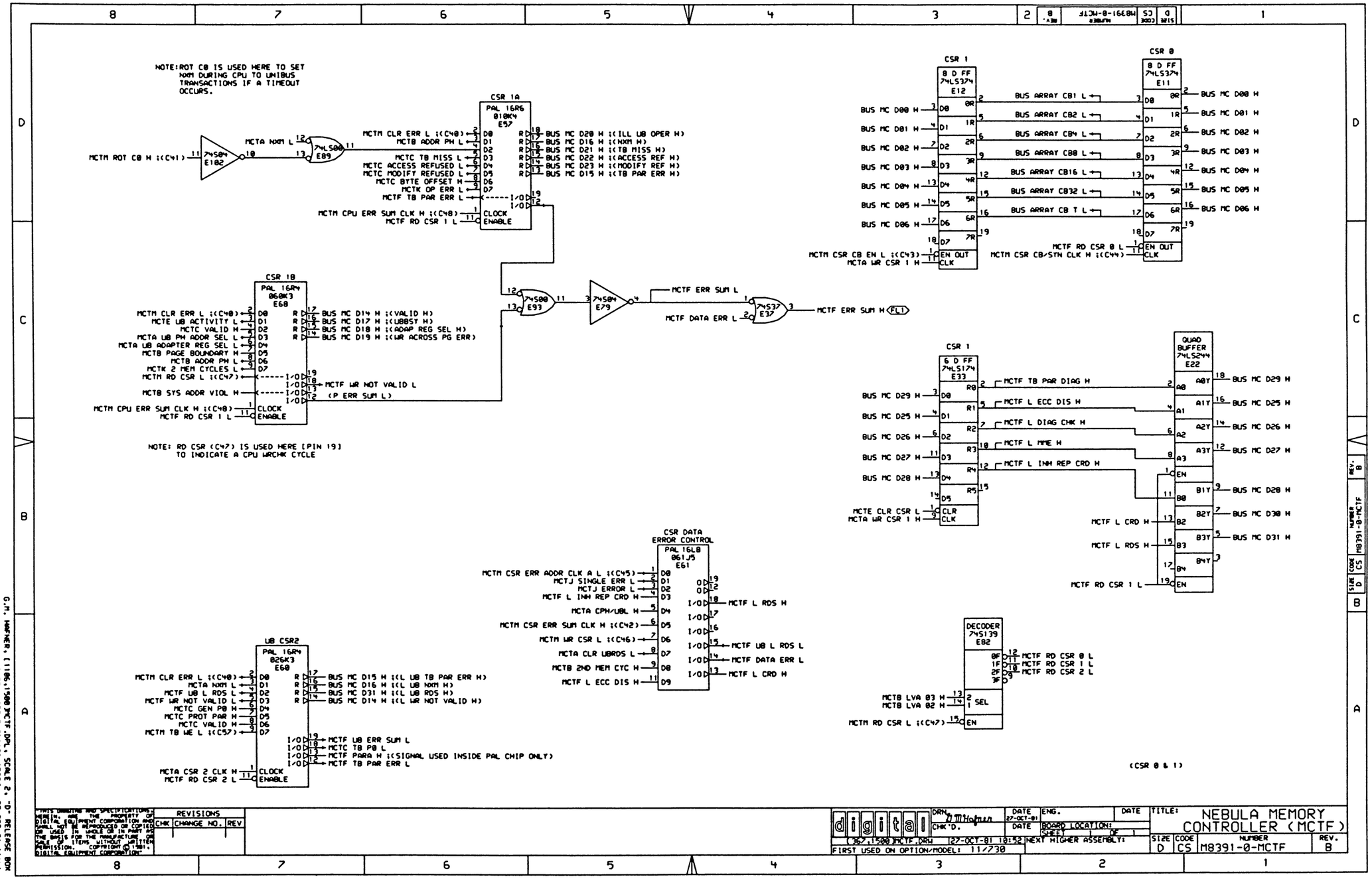

G.M. HAFNER, [1106,1500]MCTF.DPL, SCALE 2, "D" RELEASE BOX
G.M. HAFNER MCTF.PLO[1106,1500] 27-OCT-81 11:41

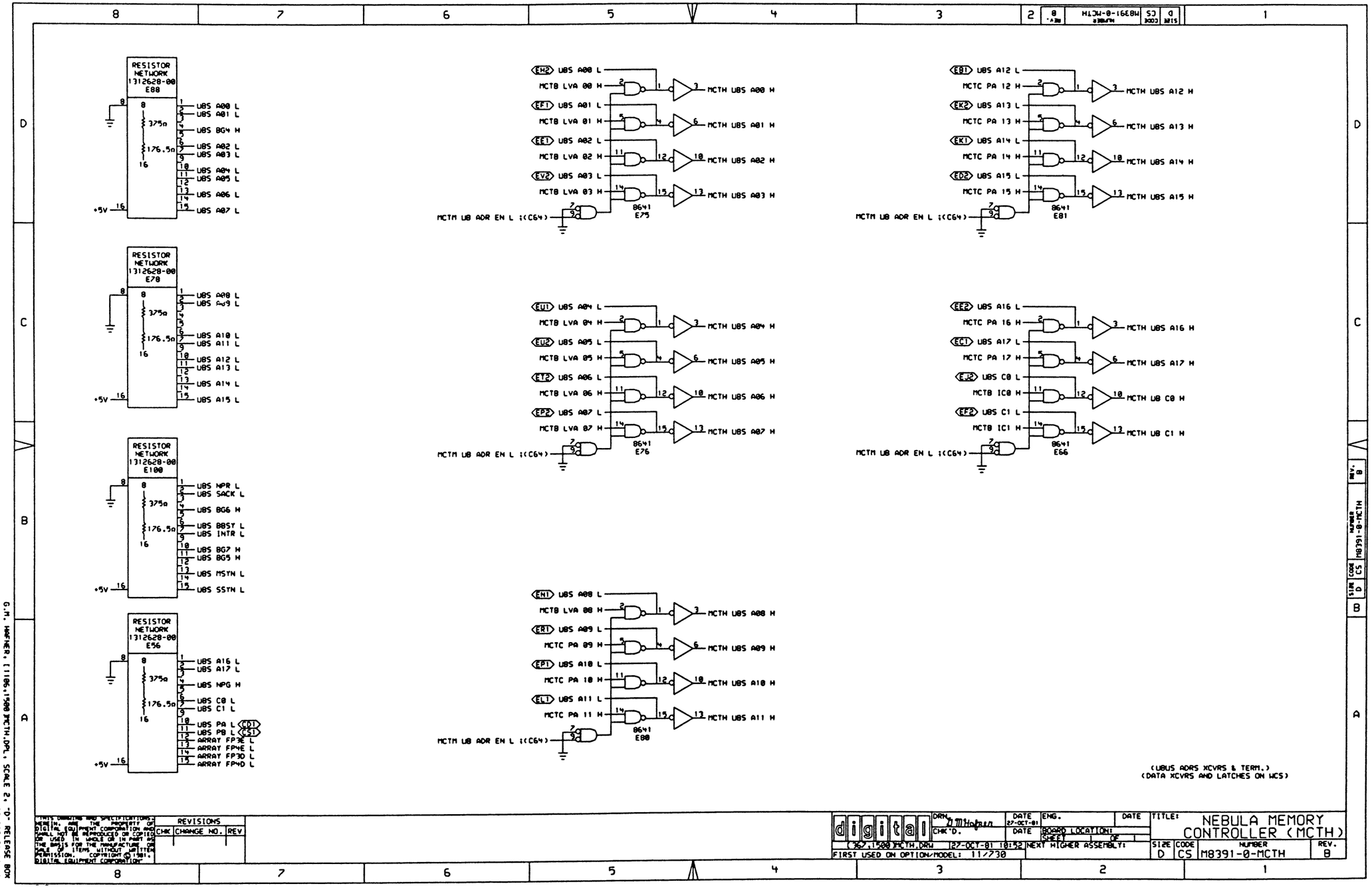
RESISTOR NETWORK 1312628-00 E88
RESISTOR NETWORK 1312628-00 E78
RESISTOR NETWORK 1312628-00 E100
RESISTOR NETWORK 1312628-00 E56
375Ω
176.5Ω
+5V
UBS A00 L
UBS A01 L
UBS BG4 H
UBS A02 L
UBS A03 L
UBS A04 L
UBS A05 L
UBS A06 L
UBS A07 L
UBS A08 L
UBS A09 L
UBS A10 L
UBS A11 L
UBS A12 L
UBS A13 L
UBS A14 L
UBS A15 L
UBS NPR L
UBS SACK L
UBS BG6 H
UBS BBSY L
UBS INTR L
UBS BG7 H
UBS BG5 H
UBS MSYN L
UBS SSYN L
UBS A16 L
UBS A17 L
UBS NPG H
UBS C0 L
UBS C1 L
UBS PA L
UBS PB L
ARRAY FP3E L
ARRAY FP4E L
ARRAY FP3D L
ARRAY FP4D L
CD1
CS1
MCTB LVA 00 H
MCTB LVA 01 H
MCTB LVA 02 H
MCTB LVA 03 H
MCTB LVA 04 H
MCTB LVA 05 H
MCTB LVA 06 H
MCTB LVA 07 H
MCTB LVA 08 H
MCTC PA 09 H
MCTC PA 10 H
MCTC PA 11 H
MCTC PA 12 H
MCTC PA 13 H
MCTC PA 14 H
MCTC PA 15 H
MCTC PA 16 H
MCTC PA 17 H
MCTB IC0 H
MCTB IC1 H
MCTM UB ADR EN L ;(C64)
8641 E75
8641 E76
8641 E80
8641 E81
8641 E66
MCTH UBS A00 H
MCTH UBS A01 H
MCTH UBS A02 H
MCTH UBS A03 H
MCTH UBS A04 H
MCTH UBS A05 H
MCTH UBS A06 H
MCTH UBS A07 H
MCTH UBS A08 H
MCTH UBS A09 H
MCTH UBS A10 H
MCTH UBS A11 H
MCTH UBS A12 H
MCTH UBS A13 H
MCTH UBS A14 H
MCTH UBS A15 H
MCTH UBS A16 H
MCTH UBS A17 H
MCTH UB C0 H
MCTH UB C1 H
(UBUS ADRS XCVRS & TERM.)
(DATA XCVRS AND LATCHES ON WCS)
REVISIONS
CHK
CHANGE NO.
REV
digital
DRN. D M Hafner
DATE 27-OCT-81
CHK'D.
ENG.
DATE
BOARD LOCATION:
SHEET 1 OF 1
(367,1500)MCTH.DRW 27-OCT-81 10:52
NEXT HIGHER ASSEMBLY:
FIRST USED ON OPTION/MODEL: 11/730
TITLE: NEBULA MEMORY CONTROLLER (MCTH)
SIZE D
CODE CS
NUMBER M8391-0-MCTH
REV. B
G.M. HAFNER, [1106,1500]MCTH.DPL, SCALE 2, "D" RELEASE BOX
G.M. HAFNER MCTH.PLO[1106,1500] 27-OCT-81 11:41

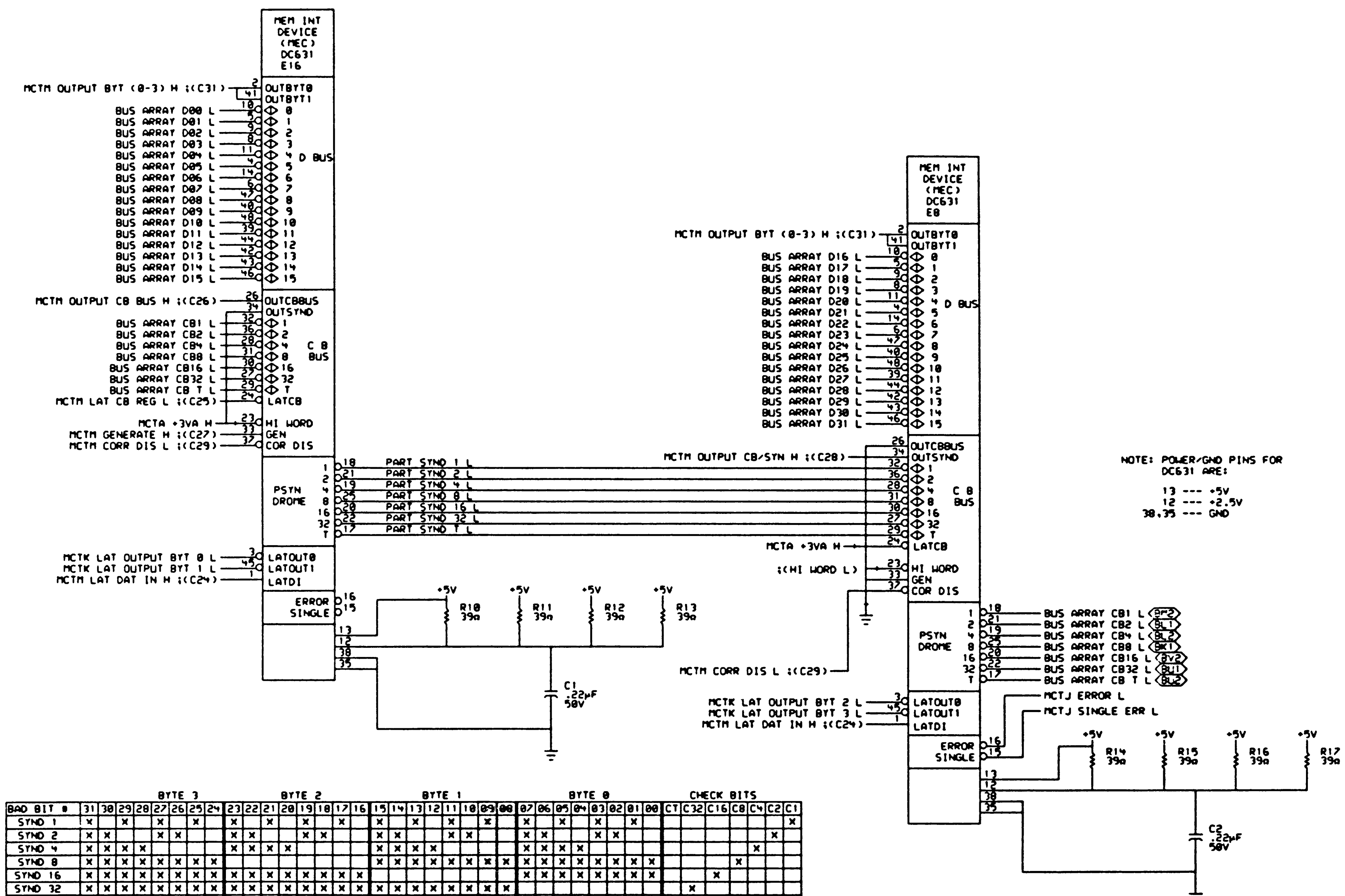

NOTE: POWER/GND PINS FOR DC631 ARE:

13 --- +5V
12 --- +2.5V
38,35 --- GND

	BYTE 3								BYTE 2								BYTE 1								BYTE 0								CHECK BITS						
BAD BIT #	31	30	29	28	27	26	25	24	23	22	21	20	19	18	17	16	15	14	13	12	11	10	09	08	07	06	05	04	03	02	01	00	CT	C32	C16	C8	C4	C2	C1
SYND 1	X		X		X		X		X		X		X		X		X		X		X		X		X		X		X		X								X
SYND 2	X	X			X	X			X	X			X	X			X	X			X	X			X	X			X	X								X	
SYND 4	X	X	X	X					X	X	X	X					X	X	X	X					X	X	X	X									X		
SYND 8	X	X	X	X	X	X	X	X									X	X	X	X	X	X	X	X	X	X	X	X	X	X	X	X				X			
SYND 16	X	X	X	X	X	X	X	X	X	X	X	X	X	X	X	X									X	X	X	X	X	X	X	X			X				
SYND 32	X	X	X	X	X	X	X	X	X	X	X	X	X	X	X	X	X	X	X	X	X	X	X	X										X					
SYND T	X			X		X	X			X	X		X			X		X	X		X			X		X	X		X			X	X						
SYNDROME CODE (HEX)	7F	3E	3D	7C	3B	7A	79	38	37	76	75	34	73	32	31	70	2F	6E	6D	2C	6B	2A	29	68	1F	5E	5D	1C	5B	1A	19	58	40	20	16	8	4	2	1

MODIFIED HAMMING CODE

X=1=H

EVEN PARITY IS GENERATED ON 1,2 AND T
ODD PARITY IS GENERATED ON 4,8,16 AND 32
ALL UNUSED CODES ARE CONSIDERED AN RDS (UNCORRECTABLE ERROR)

(ECC CONTROL)

THIS DRAWING AND SPECIFICATIONS, HEREIN, ARE THE PROPERTY OF DIGITAL EQUIPMENT CORPORATION AND SHALL NOT BE REPRODUCED OR COPIED OR USED IN WHOLE OR IN PART AS THE BASIS FOR THE MANUFACTURE OR SALE OF ITEMS WITHOUT WRITTEN PERMISSION. COPYRIGHT © 1981, DIGITAL EQUIPMENT CORPORATION

REVISIONS		
CHK	CHANGE NO.	REV

digital

DRN. D.M.Hofner | DATE 27-OCT-81 | ENG. | DATE
CHK'D. | DATE | BOARD LOCATION: | SHEET 1 OF 1
(367,1500)MCTJ.DRW 27-OCT-81 10:52 | NEXT HIGHER ASSEMBLY:
FIRST USED ON OPTION/MODEL: 11/730

TITLE: NEBULA MEMORY CONTROLLER (MCTJ)

SIZE D | CODE CS | NUMBER M8391-0-MCTJ | REV. B

G.M. HAFNER, (1106,1500)MCTJ.DPL, SCALE 2, "D" RELEASE BOX
G.M. HAFNER MCTJ.PLO(1106,1500) 27-OCT-81 11:41

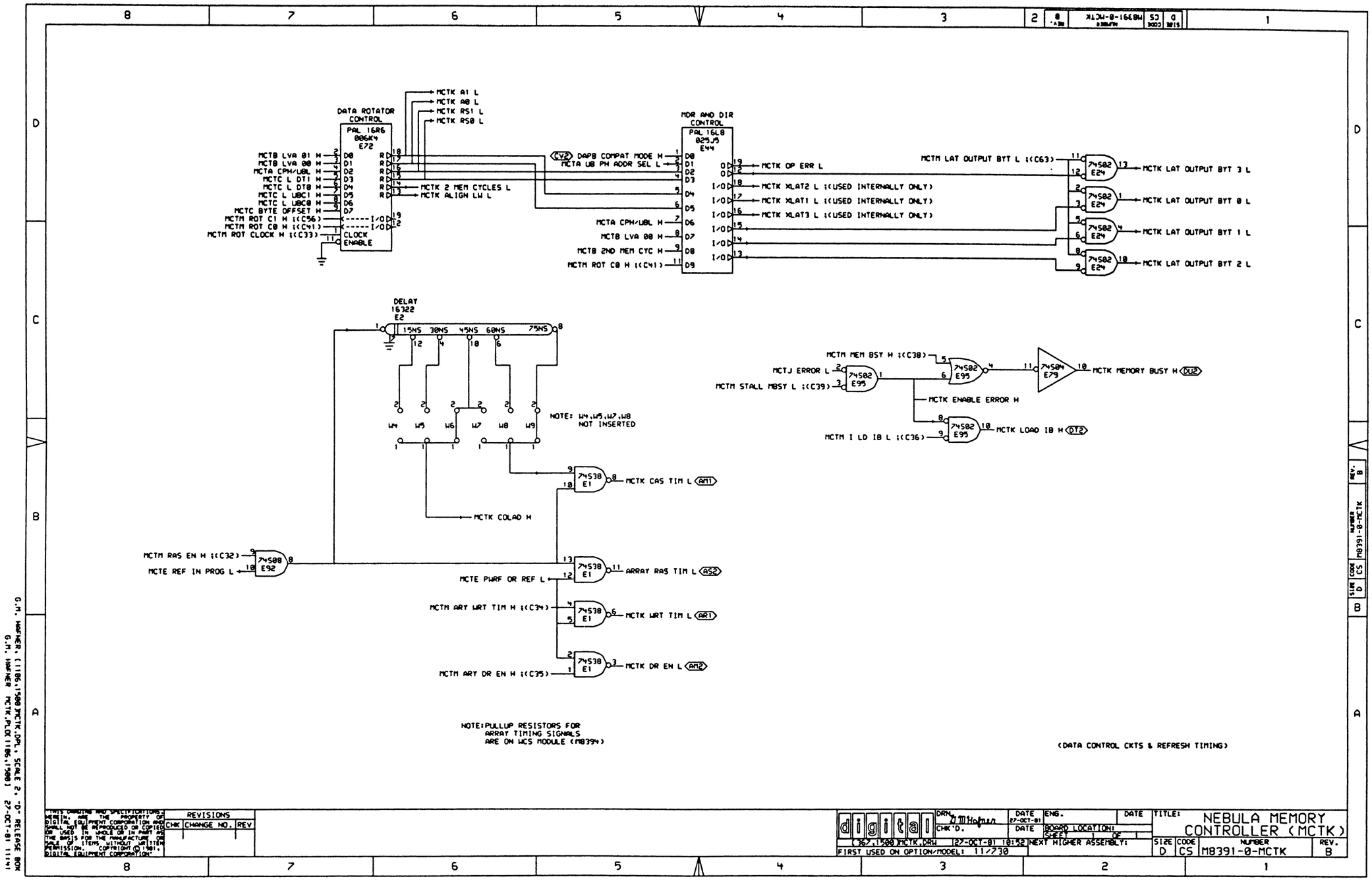
DATA ROTATOR CONTROL
PAL 16R6
006K4
E72
MCTB LVA 01 H
MCTB LVA 00 H
MCTA CPH/UBL H
MCTC L DT1 H
MCTC L DT0 H
MCTC L UBC1 H
MCTC L UBC0 H
MCTC BYTE OFFSET H
MCTM ROT C1 H ;(C56)
MCTM ROT C0 H ;(C41)
MCTM ROT CLOCK H ;(C33)
CLOCK
ENABLE
MCTK A1 L
MCTK A0 L
MCTK RS1 L
MCTK RS0 L
MCTK 2 MEM CYCLES L
MCTK ALIGN LW L
MDR AND DIR CONTROL
PAL 16L8
025J5
E44
CV2 DAPB COMPAT MODE H
MCTA UB PH ADDR SEL L
MCTA CPH/UBL H
MCTB LVA 00 H
MCTB 2ND MEM CYC H
MCTM ROT C0 H ;(C41)
MCTK OP ERR L
MCTK XLAT2 L ;(USED INTERNALLY ONLY)
MCTK XLAT1 L ;(USED INTERNALLY ONLY)
MCTK XLAT3 L ;(USED INTERNALLY ONLY)
MCTM LAT OUTPUT BYT L ;(C63)
74S02 E24
MCTK LAT OUTPUT BYT 3 L
MCTK LAT OUTPUT BYT 0 L
MCTK LAT OUTPUT BYT 1 L
MCTK LAT OUTPUT BYT 2 L
DELAY
16322
E2
15NS 30NS 45NS 60NS 75NS
W4 W5 W6 W7 W8 W9
NOTE: W4,W5,W7,W8 NOT INSERTED
MCTK COLAD H
74S38 E1
MCTK CAS TIM L AM1
MCTM RAS EN H ;(C32)
MCTE REF IN PROG L
74S08 E92
MCTE PWRF OR REF L
ARRAY RAS TIM L AS2
MCTM ARY WRT TIM H ;(C34)
MCTK WRT TIM L AR1
MCTM ARY DR EN H ;(C35)
MCTK DR EN L AM2
MCTM MEM BSY H ;(C38)
MCTJ ERROR L
MCTM STALL MBSY L ;(C39)
74S02 E95
74S04 E79
MCTK MEMORY BUSY H DU2
MCTK ENABLE ERROR H
MCTM I LD IB L ;(C36)
MCTK LOAD IB H DT2
NOTE:PULLUP RESISTORS FOR ARRAY TIMING SIGNALS ARE ON WCS MODULE (M8394)
(DATA CONTROL CKTS & REFRESH TIMING)
REVISIONS
CHK CHANGE NO. REV
digital
DRN. G.M.Hafner
DATE 27-OCT-81
CHK'D.
ENG.
DATE
BOARD LOCATION:
SHEET 1 OF 1
(367,1500)MCTK.DRW 27-OCT-81 10:52
NEXT HIGHER ASSEMBLY:
FIRST USED ON OPTION/MODEL: 11/730
TITLE: NEBULA MEMORY CONTROLLER (MCTK)
SIZE D
CODE CS
NUMBER M8391-0-MCTK
REV. B
G.M. HAFNER, [1106,1500]MCTK.DPL, SCALE 2, "D" RELEASE BOX
G.M. HAFNER MCTK.PLOT[1106,1500] 27-OCT-81 11:41

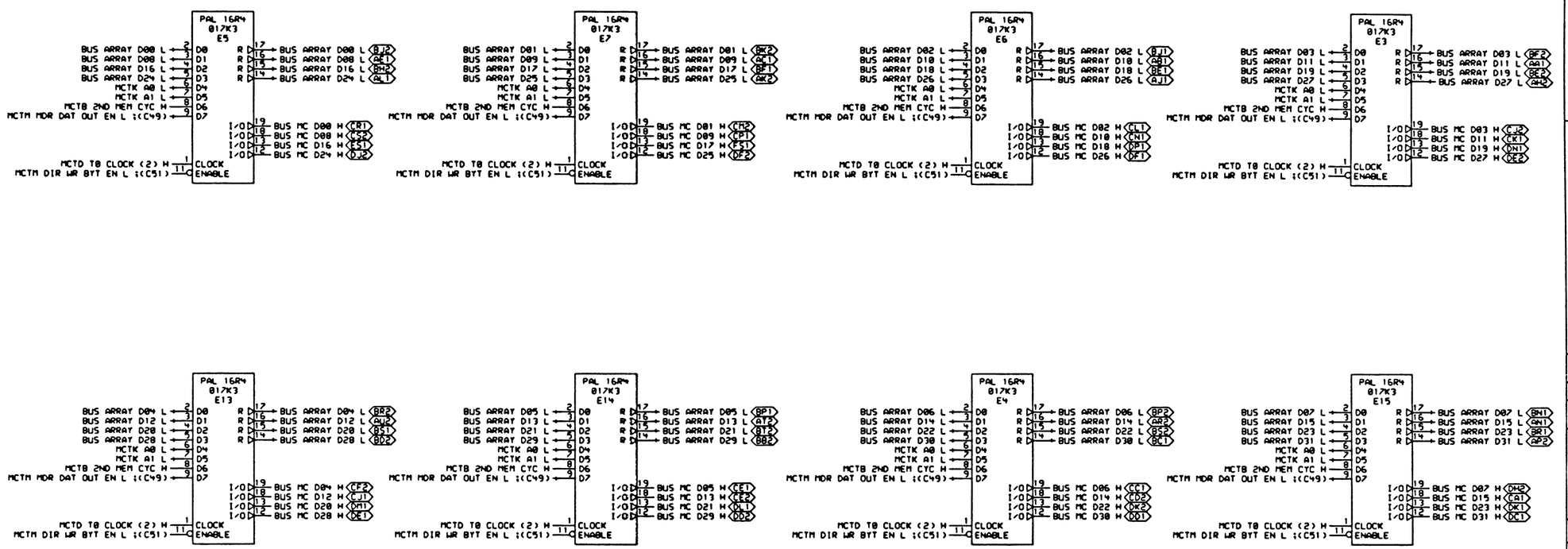

A1 L	A0 L	FUNCTION
H	H	NO ROTATE
H	L	ROTATE BYTE
L	H	ROTATE WORD
L	L	ROTATE 3 BYTES

(DATA ROTATORS/LATCHES)

THIS DRAWING AND SPECIFICATIONS, HEREIN, ARE THE PROPERTY OF DIGITAL EQUIPMENT CORPORATION AND SHALL NOT BE REPRODUCED OR COPIED OR USED IN WHOLE OR IN PART AS THE BASIS FOR THE MANUFACTURE OR SALE OF ITEMS WITHOUT WRITTEN PERMISSION. COPYRIGHT © 1981, DIGITAL EQUIPMENT CORPORATION.

REVISIONS		
CHK	CHANGE NO.	REV

digital

DRN. D.M.Hafner DATE 27-OCT-81 ENG. DATE
CHK'D. DATE BOARD LOCATION:
SHEET 1 OF 1
(367,1500)MCTL.DRW 27-OCT-81 10:52 NEXT HIGHER ASSEMBLY:
FIRST USED ON OPTION/MODEL: 11/730

TITLE: NEBULA MEMORY CONTROLLER (MCTL)

SIZE	CODE	NUMBER	REV.
D	CS	M8391-0-MCTL	B

G.M. HAFNER, [1106,1500]MCTL.DPL, SCALE 2, "D" RELEASE BOX
G.M. HAFNER MCTL.PLO[1106,1500] 27-OCT-81 11:42

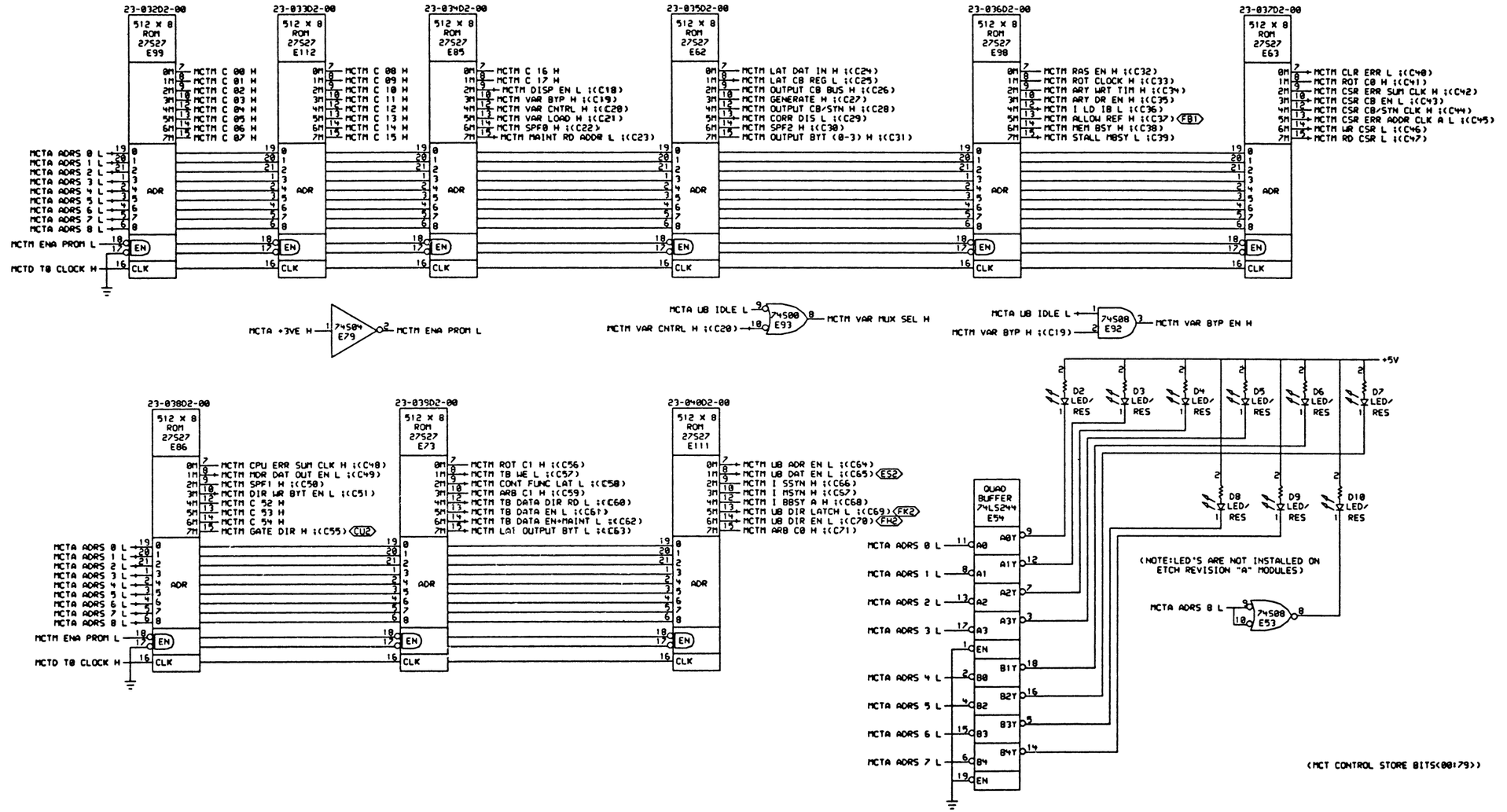

THIS DRAWING AND SPECIFICATIONS, HEREIN, ARE THE PROPERTY OF DIGITAL EQUIPMENT CORPORATION AND SHALL NOT BE REPRODUCED OR COPIED OR USED IN WHOLE OR IN PART AS THE BASIS FOR THE MANUFACTURE OR SALE OF ITEMS WITHOUT WRITTEN PERMISSION. COPYRIGHT © 1981, DIGITAL EQUIPMENT CORPORATION.

REVISIONS		
CHK	CHANGE NO.	REV

DRN D M Hofmeier	DATE 27-OCT-81	ENG.	DATE
CHK'D.	DATE	BOARD LOCATION: SHEET OF	
(367,1500)MCTM.DRW 27-OCT-81 10:52		NEXT HIGHER ASSEMBLY:	
FIRST USED ON OPTION/MODEL: 11/730			

TITLE: NEBULA MEMORY CONTROLLER (MCTM)

SIZE	CODE	NUMBER	REV.
D	CS	M8391-0-MCTM	B

G.M. HOFMEIER [1196,1500]MCTM.DPL; SCALE 2; "D" RELEASE BOX
G.M. HOFMEIER MCTM.PLO[1196,1500] 27-OCT-81 11:42

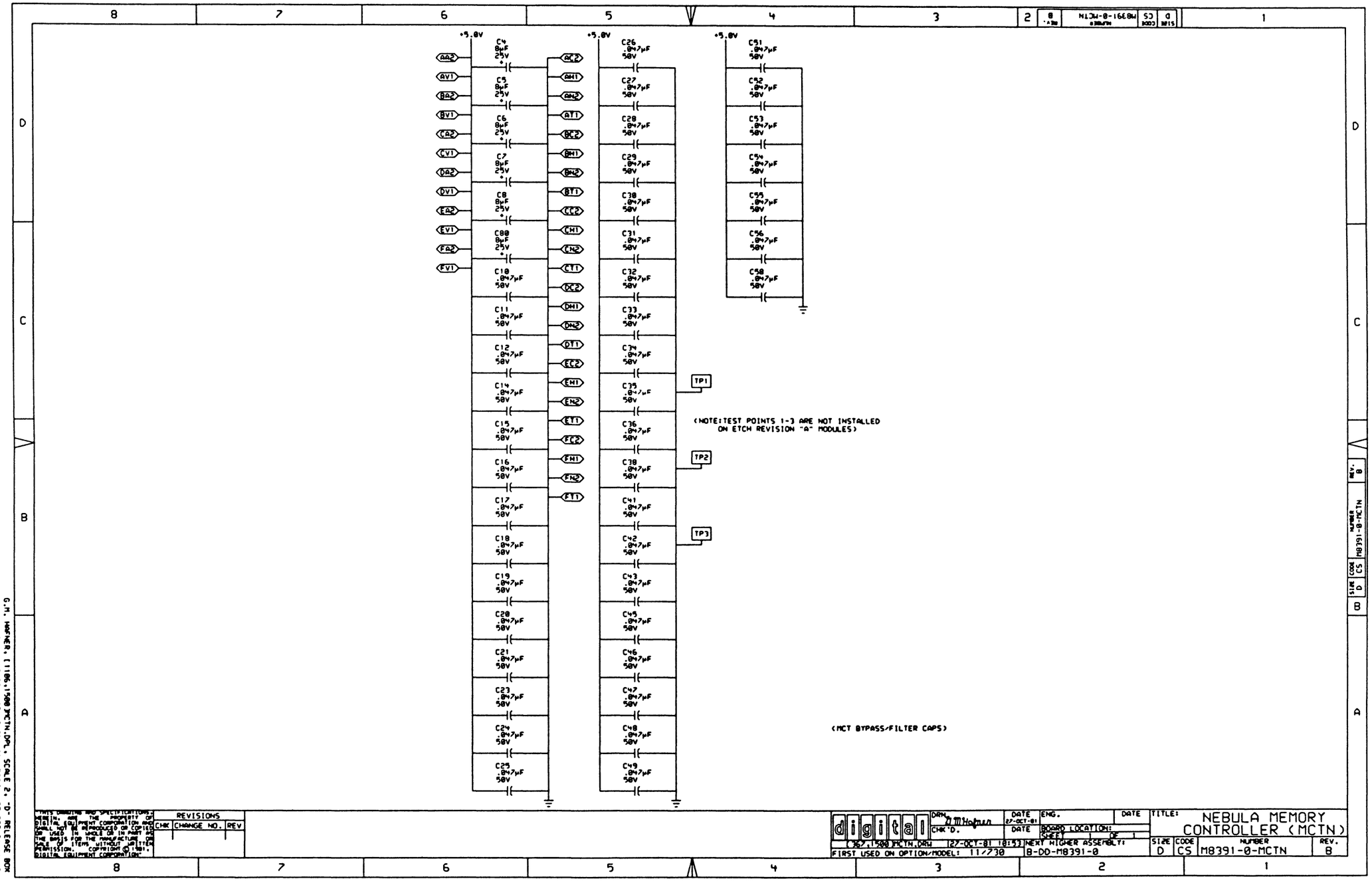

"THIS DRAWING AND SPECIFICATIONS, HEREIN, ARE THE PROPERTY OF DIGITAL EQUIPMENT CORPORATION AND SHALL NOT BE REPRODUCED OR COPIED OR USED IN WHOLE OR IN PART AS THE BASIS FOR THE MANUFACTURE OR SALE OF ITEMS WITHOUT WRITTEN PERMISSION. COPYRIGHT © 1981, DIGITAL EQUIPMENT CORPORATION"

REVISIONS		
CHK	CHANGE NO.	REV

digital

DRN. D.M.Hafner DATE 27-OCT-81 ENG. DATE

CHK'D. DATE BOARD LOCATION: SHEET 1 OF 1

(367,1500)MCTN.DRW 27-OCT-81 10:53 NEXT HIGHER ASSEMBLY: B-DD-M8391-0

FIRST USED ON OPTION/MODEL: 11/730

TITLE: NEBULA MEMORY CONTROLLER (MCTN)

SIZE	CODE	NUMBER	REV.
D	CS	M8391-0-MCTN	B

G.M. HAFNER, [1106,1500]MCTN.DPL, SCALE 2, "D" RELEASE BOX
G.M. HAFNER MCTN.PLO[1106,1500] 27-OCT-81 11:42

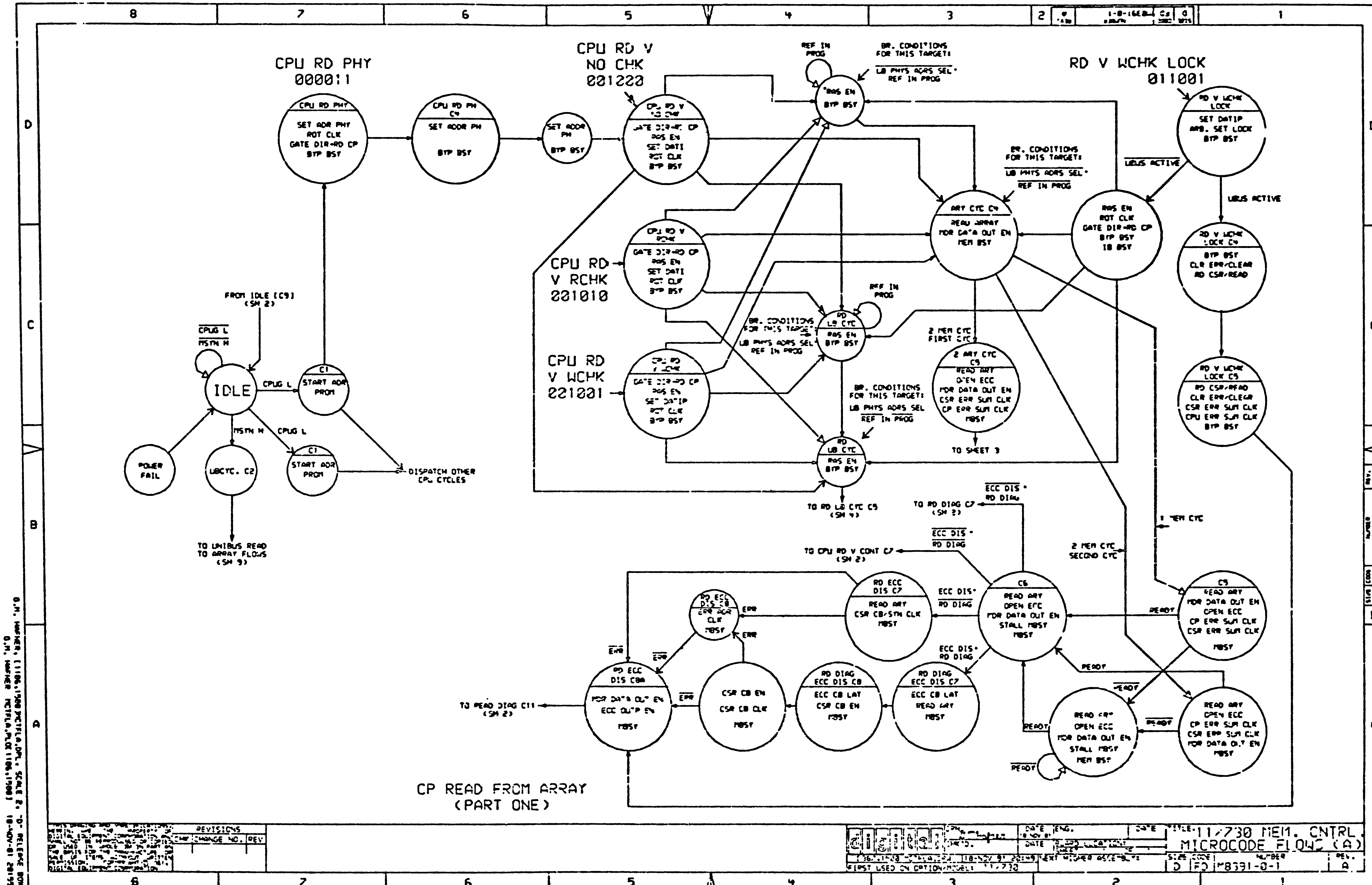
CPU RD PHY
000011
CPU RD PHY
SET ADR PHY
ROT CLK
GATE DIR→RD CP
BYP BSY
CPU RD PH C4
SET ADDR PH
BYP BSY
SET ADDR PH
BYP BSY
CPU RD V
NO CHK
001220
CPU RD V NO CHK
GATE DIR→RD CP
RAS EN
SET DATI
ROT CLK
BYP BSY
REF IN PROG
BR. CONDITIONS FOR THIS TARGET:
LB PHYS ADRS SEL • REF IN PROG
RAS EN
BYP BSY
RD V WCHK LOCK
011001
RD V WCHK LOCK
SET DATIP
ARB. SET LOCK
BYP BSY
UBUS ACTIVE
UBUS ACTIVE
BR. CONDITIONS FOR THIS TARGET:
LB PHYS ADRS SEL •
REF IN PROG
ARY CYC C4
READ ARRAY
MDR DATA OUT EN
MEM BSY
RAS EN
ROT CLK
GATE DIR→RD CP
BYP BSY
IB BSY
RD V WCHK LOCK C4
BYP BSY
CLR ERR/CLEAR
RD CSR/READ
CPU RD V RCHK
GATE DIR→RD CP
RAS EN
SET DATI
ROT CLK
BYP BSY
CPU RD
V RCHK
001010
REF IN PROG
RD LB CYC
RAS EN
BYP BSY
BR. CONDITIONS FOR THIS TARGET:
LB PHYS ADRS SEL •
REF IN PROG
2 MEM CYC
FIRST CYC
2 ARY CYC C5
READ ARY
OPEN ECC
MDR DATA OUT EN
CSR ERR SUM CLK
CP ERR SUM CLK
MBSY
RD V WCHK LOCK C5
RD CSR/READ
CLR ERR/CLEAR
CSR ERR SUM CLK
CPU ERR SUM CLK
BYP BSY
FROM IDLE [C9]
(SM 2)
CPUG L
MSYN H
IDLE
CPUG L
C1
START ADR PROM
CPU RD
V WCHK
001001
CPU RD V WCHK
GATE DIR→RD CP
RAS EN
SET DATIP
ROT CLK
BYP BSY
BR. CONDITIONS FOR THIS TARGET:
LB PHYS ADRS SEL
REF IN PROG
TO SHEET 3
MSYN H
CPUG L
POWER FAIL
UBCYC. C2
C1
START ADR PROM
DISPATCH OTHER CPU CYCLES
RD LB CYC
RAS EN
BYP BSY
TO RD LB CYC C5
(SM 4)
ECC DIS •
RD DIAG
TO RD DIAG C7
(SM 2)
1 MEM CYC
TO UNIBUS READ
TO ARRAY FLOWS
(SM 9)
ECC DIS •
RD DIAG
TO CPU RD V CONT C7
(SM 2)
2 MEM CYC
SECOND CYC
RD ECC DIS C7
READ ARY
CSR CB/SYN CLK
MBSY
ECC DIS •
RD DIAG
C6
READ ARY
OPEN ECC
MDR DATA OUT EN
STALL MBSY
MBSY
READY
C5
READ ARY
MDR DATA OUT EN
OPEN ECC
CP ERR SUM CLK
CSR ERR SUM CLK
MBSY
RD ECC DIS C8
ERR ADR CLK
MBSY
ERR
ERR
ERR
ERR
RD ECC DIS C8A
MDR DATA OUT EN
ECC OUTP EN
MBSY
ERR
CSR CB EN
CSR CB CLK
MBSY
ECC DIS •
RD DIAG
RD DIAG ECC DIS C8
ECC CB LAT
CSR CB EN
MBSY
RD DIAG ECC DIS C7
ECC CB LAT
READ ARY
MBSY
READY
READY
READY
READ ARY
OPEN ECC
MDR DATA OUT EN
STALL MBSY
MEM BSY
READY
READ ARY
OPEN ECC
CP ERR SUM CLK
CSR ERR SUM CLK
MDR DATA OUT EN
MBSY
READY
TO READ DIAG C11
(SM 2)
CP READ FROM ARRAY
(PART ONE)
REVISIONS
CHG CHANGE NO. REV
FIRST USED ON OPTION/MODEL: 11/730
TITLE: 11/730 MEM. CNTRL.
MICROCODE FLOWS (A)
SIZE D
CODE FD
NUMBER MB391-0-1
REV. A
D.M. HAFNER, [1106,1500]MCTFLA.DPL, SCALE 2, "D" RELEASE BOX
D.M. HAFNER MCTFLA.PLO[1106,1500] 18-NOV-81 20:55

RD DIAG C7
ECC CB LAT
READ ARY
MBSY
RD DIAG C8
ECC CB LAT
MBSY
RD DIAG C9
ECC CB LAT
CSR CB EN
MBSY
MDR DATA OUT EN
ECC OUTP EN
CSR CB EN
MBSY
ERR
RD DIAG C10
ECC OUTP EN
MDR DATA OUT EN
OUTP CB BUS
ERR ADR CLK
MBSY
SERR C10
MDR DATA OUT EN
MDR DATA OUT EN
ERR ADR CLK
ECC OUTP EN
ECC OUTP LAT
MBSY
SERR C11
ECC OUTP EN
MDR DATA OUT EN
EN CORR
OUTP CB/SYN
CSR CB/SYN CLK
ECC OUTP EN
MBSY
MDR DATA OUT EN
EN CORR
OUTP B-SYND
ECC JUTP EN
MBSY
FROM C6 (SH 1)
RD DIAG C11
MDR DATA OUT EN
ECC OUTP EN
MBSY
TO PRINT ECC DATA C13 (SH 28)
SERR
ERR C9B
MBSY
MDR DATA OUT EN
OUTP CB BUS
CSR ERR ADR CLK
SERR
MBSY
MDR DATA OUT EN
OUTP CB BUS
CSR ERR ADR CLK
SERR
MDR DATA OUT EN
OUTP CB BUS
ECC OUTP EN
CSR CB CLK
MBSY
WAIT
CPU DR C1
ALLOW REFR
ECC OUTP EN
MDR DATA OUT EN
CPU DR
SERR
SERR
ERR C9
MBSY
MDR DATA OUT EN
OUTP CB BUS
CSR ERR ADR CLK
CPU DR · ERR
CPU DR · ERR
CPU DR · ERR SUM
P2 · ERR
CPU DR · ERR SUM
C8
STALL MBSY
ECC OUTP EN
MDR DATA OUT EN
P2
P2
ALLOW REFR
ECC OUTP EN
MDR DATA OUT EN
P2
TO IDLE (SH 1)
C9
IDLE
P2
C8A
STALL MBSY
ECC OUTP EN
MDR DATA OUT EN
CPU DR · ERR
ECC OUTP EN
MDR DATA OUT EN
CPU DR · ERR
CPU DR · ERR SUM
FROM DCTa RD C11a (SH 14)
FROM C6 (SH 1)
CPU RD V CONT C7
READ ARY
MDR DATA OUT EN
ECC OUTPUT EN
MBSY
P2
ALLOW REFR
ECL OUTP EN
MDR DATA OUT EN
CPU DR · ERR SUM
P2
P2
ALLOW REFR
ECC OUTP EN
MDR DATA OUT EN
P2
CP READ FROM ARRAY
(PART TWO)
REVISIONS
11/730 MEM. CNTRL.
MICROCODE FLOWS (B)
SIZE D
FSCM NO
M8391-0-2
REV. A
SHEET 4

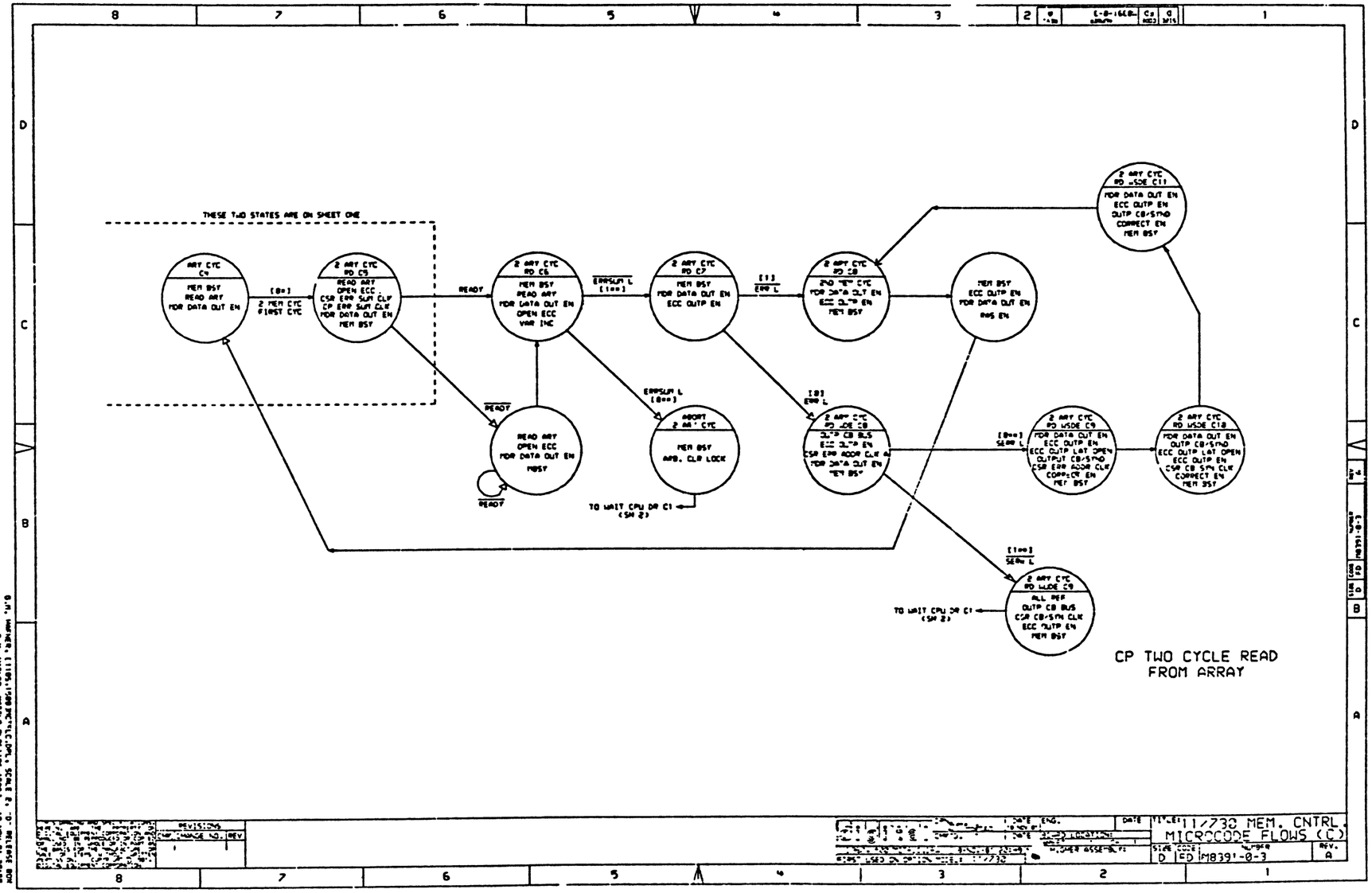

CP TWO CYCLE READ FROM ARRAY

REVISIONS		
ECO	IMAGE NO.	REV

DRAWN			DATE
CHECKED		ENG.	
APPROVED			
MFG			

TITLE: 11/730 MEM. CNTRL. MICROCODE FLOWS (C)

SIZE	CODE	NUMBER	REV.
D	ED	M8391-0-3	A

D.M. HANKER (1195,1500)MCTALC.PLOT 1 SCALE 2. "D" RELEASE BOM
D.M. HANKER MCTALC.PLOT(1196,1500) 16-NOV-81 20:55

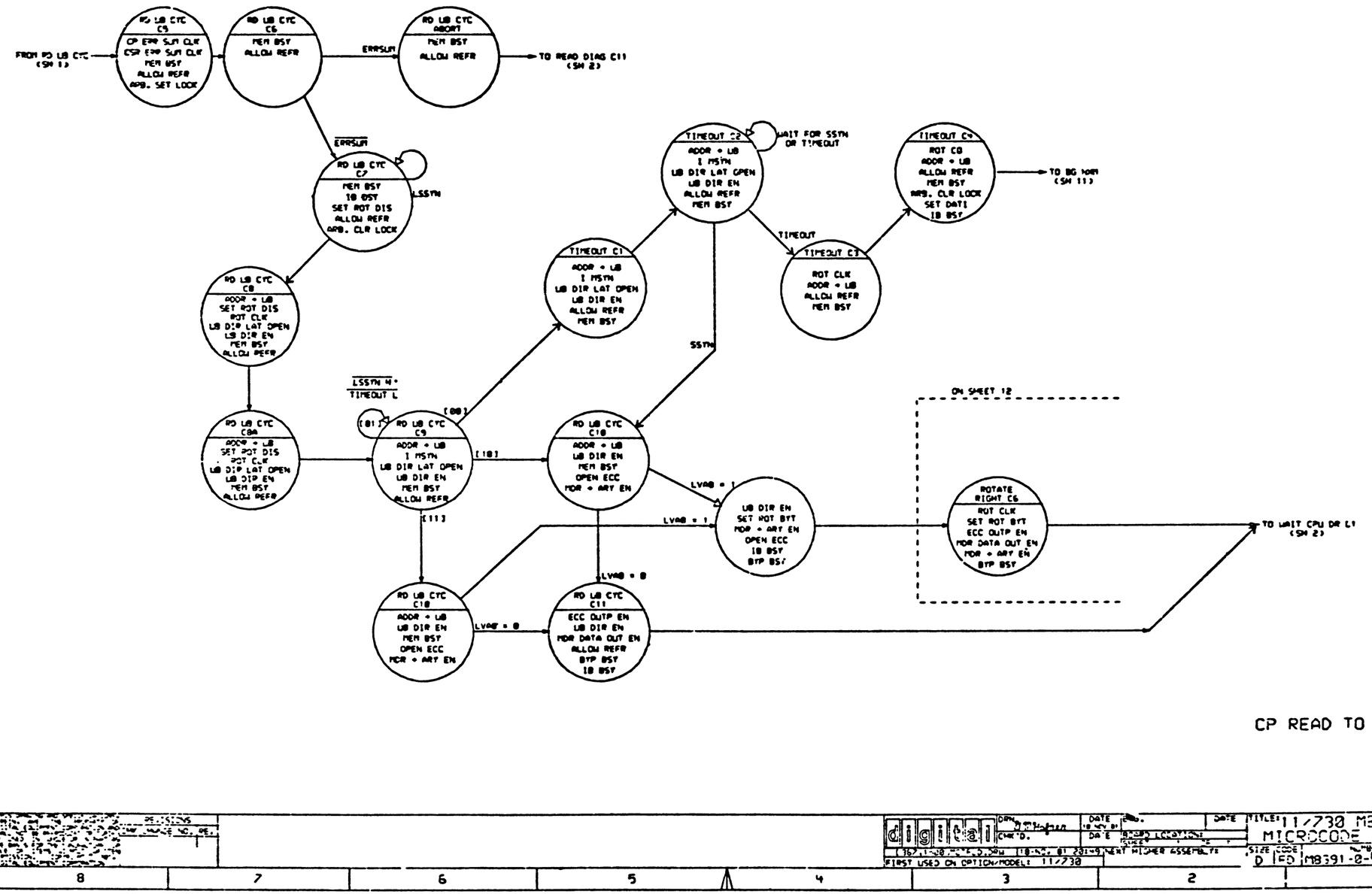

CP READ TO UNIBUS

8	7	6	5	4	3	2			1

8	7	6	5	4	3	2			1

digital

DRN [illegible] DATE 18 NOV 81

CHK'D. DATE

[362,1-20 [illegible] 18-NOV-81 23:49 VERT MINDER ASSEMBLY]

FIRST USED ON OPTION/MODEL: 11/730

TITLE: 11/730 MEM. CNTRL MICROCODE FLOWS (D)

SIZE D | CODE ED | NUMBER MB391-0-4 | REV. A

D.N. MARKER, MCTL0,MCTL1,MCTL2,MCTL3,MCTL4,SC54,E2,E1,1968,1969 18-NOV-81 23:49 MCTL954 -0- MB391 BOX 28195

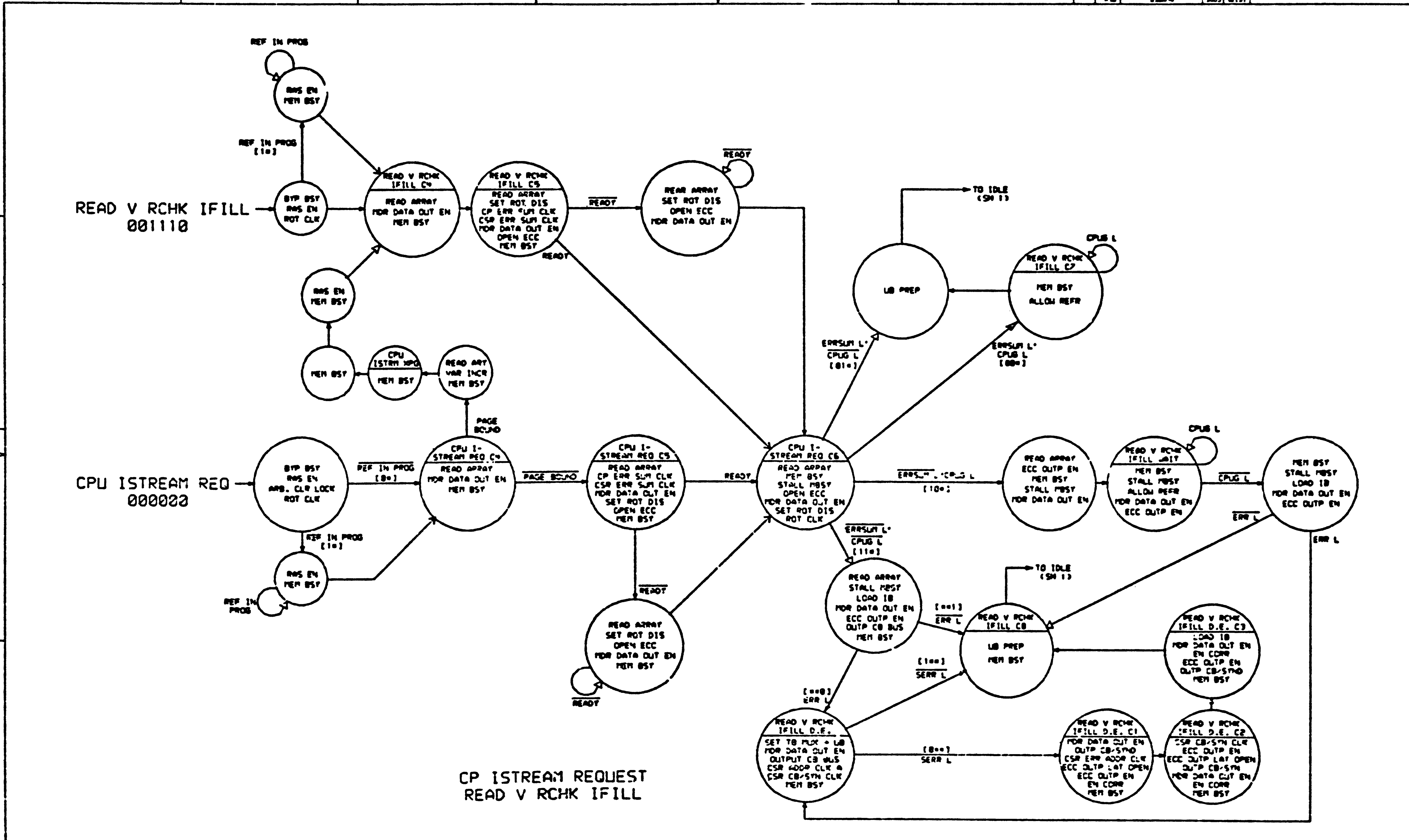

TITLE: 11/730 MEM. CNTRL MICROCODE FLOWS (E)

SIZE	CODE	NUMBER	REV.
D	FD	M8391-0-5	A

FIRST USED ON OPTION/MODEL: 11/730

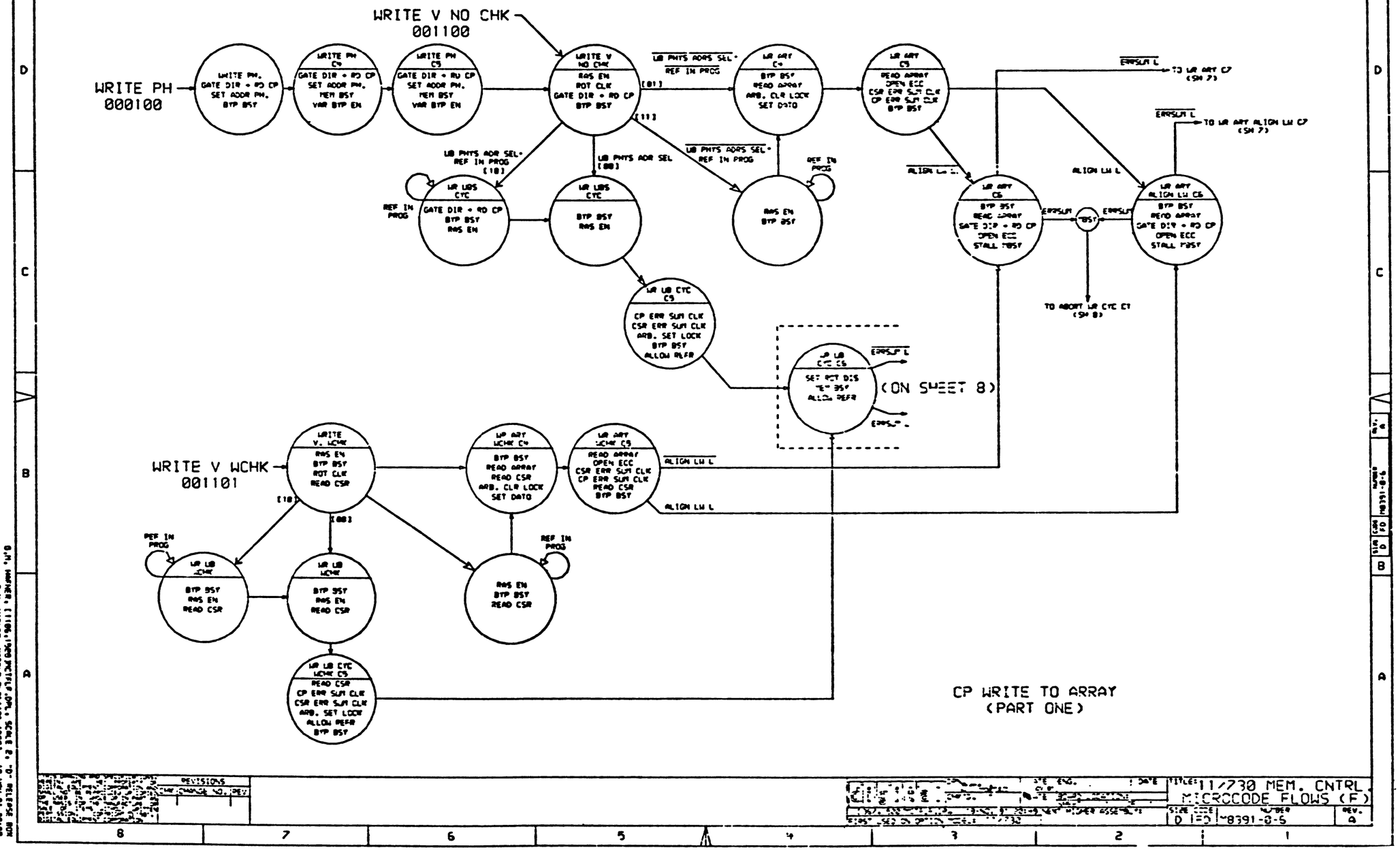
WRITE V NO CHK
001100
WRITE PH
000100
WRITE PH, GATE DIR + RD CP, SET ADDR PH., BYP BSY
WRITE PH C5, GATE DIR + RD CP, SET ADDR PH., MEM BSY, VAR BYP EN
WRITE PH C5, GATE DIR + RD CP, SET ADDR PH., MEM BSY, VAR BYP EN
WRITE V NO CHK, RMS EN, ROT CLK, GATE DIR + RD CP, BYP BSY
LB PHYS ADRS SEL * REF IN PROG
(01)
(11)
LB PHYS ADR SEL * REF IN PROG
(10)
LB PHYS ADR SEL
(00)
LB PHYS ADRS SEL * REF IN PROG
REF IN PROG
LB ARY C4, BYP BSY, READ ARRAY, ARB. CLR LOCK, SET DATO
LB ARY C5, READ ARRAY, OPEN ECC, CSR ERR SUM CLR, CP ERR SUM CLR, BYP BSY
ERRSUM L
TO LB ARY C7 (SH 7)
ERRSUM L
TO LB ARY ALIGN LW C7 (SH 7)
ALIGN LW L
ALIGN LW L
LB LBS CYC, GATE DIR + RD CP, BYP BSY, RMS EN
REF IN PROG
LB LBS CYC, BYP BSY, RMS EN
RMS EN, BYP BSY
LB ARY C6, BYP BSY, READ ARRAY, GATE DIR + RD CP, OPEN ECC, STALL MBSY
ERRSUM
MBSY
ERRSUM
LB ARY ALIGN LW C6, BYP BSY, READ ARRAY, GATE DIR + RD CP, OPEN ECC, STALL MBSY
TO ABORT LB CYC C7 (SH 8)
LB LB CYC C5, CP ERR SUM CLR, CSR ERR SUM CLR, ARB. SET LOCK, BYP BSY, ALLOW REFR
LB LB CYC C6, SET ROT DIS, SET BSY, ALLOW REFR
ERRSUM L
(ON SHEET 8)
ERRSUM L
WRITE V WCHK
001101
WRITE V. WCHK, RMS EN, BYP BSY, ROT CLR, READ CSR
(10)
(00)
LB ARY WCHK C4, BYP BSY, READ ARRAY, READ CSR, ARB. CLR LOCK, SET DATO
LB ARY WCHK C5, READ ARRAY, OPEN ECC, CSR ERR SUM CLR, CP ERR SUM CLR, READ CSR, BYP BSY
ALIGN LW L
ALIGN LW L
REF IN PROG
LB LB WCHK, BYP BSY, RMS EN, READ CSR
LB LB WCHK, BYP BSY, RMS EN, READ CSR
RMS EN, BYP BSY, READ CSR
REF IN PROG
LB LB CYC WCHK C5, READ CSR, CP ERR SUM CLR, CSR ERR SUM CLR, ARB. SET LOCK, ALLOW REFR, BYP BSY
CP WRITE TO ARRAY
(PART ONE)
REVISIONS
TITLE: 11/730 MEM. CNTRL. MICROCODE FLOWS (F)
SIZE D
NUMBER 8391-0-6
REV. A

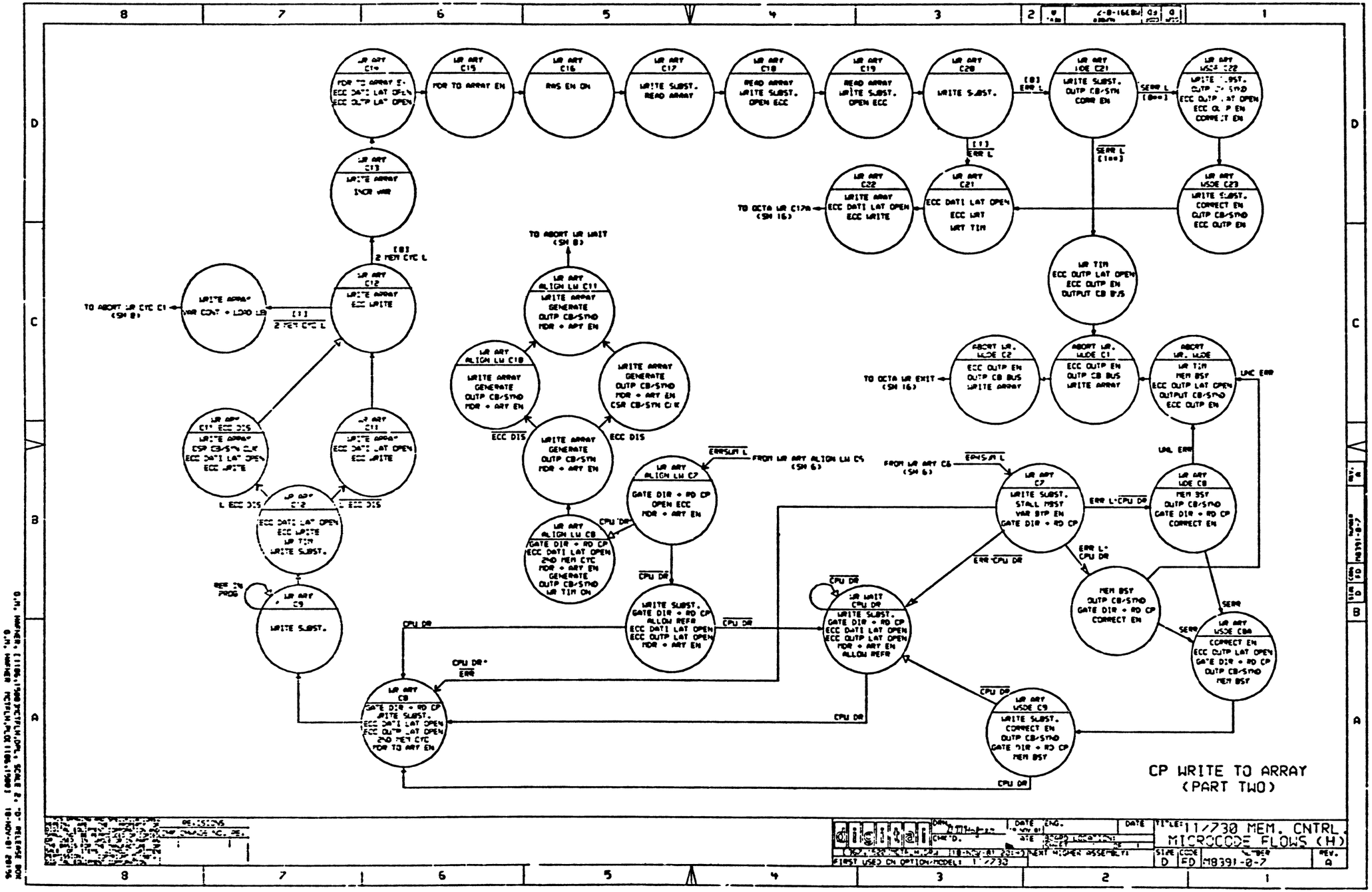
CP WRITE TO ARRAY
(PART TWO)
TITLE: 11/730 MEM. CNTRL.
MICROCODE FLOWS (H)
SIZE D
CODE FD
NUMBER M8391-0-7
REV. A
FIRST USED ON OPTION/MODEL: 11/730
NEXT HIGHER ASSEMBLY:
TO ABORT WR WAIT (SH 8)
TO OCTA WR EXIT (SH 16)
TO OCTA WR C17A (SH 16)
TO ABORT WR CYC C1 (SH 8)
FROM WR ARY ALIGN LW C5 (SH 6)
FROM WR ARY C6 (SH 6)
WRITE SUBST.
WRITE ARRAY
ECC WRITE
WRITE SUBST. READ ARRAY
WRITE SUBST. OPEN ECC
WRITE SUBST. OUTP CB/SYN CORR EN
WRITE SUBST. CORRECT EN OUTP CB/SYN ECC OUTP EN
ECC DATI LAT OPEN ECC WRT WRT TIM
WR TIM ECC OUTP LAT OPEN ECC OUTP EN OUTPUT CB BUS
ABORT WR. WUDE C1 ECC OUTP EN OUTP CB BUS WRITE ARRAY
ABORT WR. WUDE C2 ECC OUTP EN OUTP CB BUS WRITE ARRAY
ABORT WR. WUDE WR TIM MEM BSY ECC OUTP LAT OPEN OUTPUT CB/SYN ECC OUTP EN
WR ARY WUDE C8 MEM BSY OUTP CB/SYN GATE DIR + RD CP CORRECT EN
WR ARY WSDE C8A CORRECT EN ECC OUTP LAT OPEN GATE DIR + RD CP OUTP CB/SYN MEM BSY
WR ARY WSDE C9 WRITE SUBST. CORRECT EN OUTP CB/SYN GATE DIR + RD CP MEM BSY
WR ARY C7 WRITE SUBST. STALL MBSY VAR BYP EN GATE DIR + RD CP
WR WAIT CPU DR WRITE SUBST. GATE DIR + RD CP ECC DATI LAT OPEN ECC OUTP LAT OPEN MDR + ARY EN ALLOW REFR
WRITE SUBST. GATE DIR + RD CP ALLOW REFR ECC DATI LAT OPEN ECC OUTP LAT OPEN MDR + ARY EN
WR ARY C8 GATE DIR + RD CP WRITE SUBST. ECC DATI LAT OPEN ECC OUTP LAT OPEN 2ND MEM CYC MDR TO ARY EN
WR ARY C9 WRITE SUBST.
WR ARY C12 ECC DATI LAT OPEN ECC WRITE WR TIM WRITE SUBST.
WR ARY C11 WRITE ARRAY ECC DATI LAT OPEN ECC WRITE
WR ARY C11 ECC DIS WRITE ARRAY CSR CB/SYN CLK ECC DATI LAT OPEN ECC WRITE
WR ARY C12 WRITE ARRAY ECC WRITE
WR ARY C13 WRITE ARRAY INCR VAR
WR ARY C14 MDR TO ARRAY EN ECC DATI LAT OPEN ECC OUTP LAT OPEN
WR ARY C15 MDR TO ARRAY EN
WR ARY C16 RAS EN ON
WR ARY C17 WRITE SUBST. READ ARRAY
WR ARY C18 READ ARRAY WRITE SUBST. OPEN ECC
WR ARY C19 READ ARRAY WRITE SUBST. OPEN ECC
WR ARY C20 WRITE SUBST.
WR ARY C21 ECC DATI LAT OPEN ECC WRT WRT TIM
WR ARY C22 WRITE ARAY ECC DATI LAT OPEN ECC WRITE
WR ARY WSDE C23 WRITE SUBST. CORRECT EN OUTP CB/SYN ECC OUTP EN
WR ARY WDE C21 WRITE SUBST. OUTP CB/SYN CORR EN
WR ARY WSDE C22 WRITE SUBST. OUTP CB/SYN ECC OUTP LAT OPEN ECC OUTP EN CORRECT EN
WR ARY ALIGN LW C11 WRITE ARRAY GENERATE OUTP CB/SYN MDR + ARY EN
WR ARY ALIGN LW C10 WRITE ARRAY GENERATE OUTP CB/SYN MDR + ARY EN
WRITE ARRAY GENERATE OUTP CB/SYN MDR + ARY EN CSR CB/SYN CLK
WRITE ARRAY GENERATE OUTP CB/SYN MDR + ARY EN
WR ARY ALIGN LW C7 GATE DIR + RD CP OPEN ECC MDR + ARY EN
WR ARY ALIGN LW C8 GATE DIR + RD CP ECC DATI LAT OPEN 2ND MEM CYC MDR + ARY EN GENERATE OUTP CB/SYN WR TIM ON
ERRSUM L
CPU DR
ERR L·CPU DR
ERR·CPU DR
UNL ERR
UNC ERR
SERR
SERR L
ERR L
ECC DIS
L ECC DIS
REF IN PROG
2 MEM CYC L
[1]
[8]
[1]
[8]
[1]
[8]

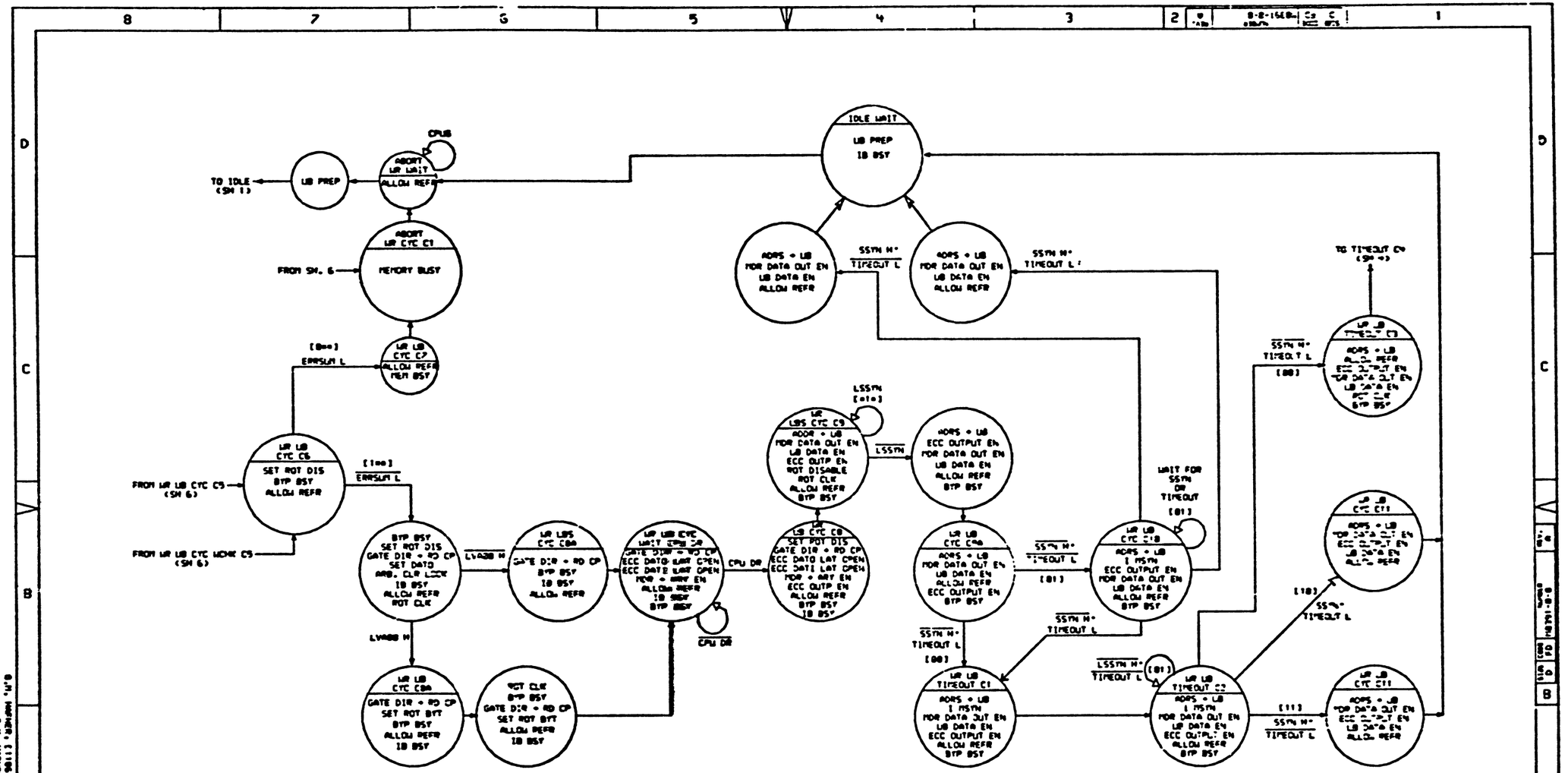

D.M. HAMMER [1100.1980]KCTRL.J.DPL, SCALE 2, "D" RELEASE MDD
D.M. HAMMER MCTRL.J.PLT[1100,1980] 18-NOV-81 20:56

REVISIONS		
ZONE	CHANGE NO.	REV

DRN	DATE ENG.	DATE	11/730 MEM. CNTRL
CHK'D.	BY		MICROCODE FLOWS (J)
18-NOV-81 23:49			
FIRST USED ON OPTION-MODEL: 1 /730			SIZE D ED-M8391-0-8 REV. A

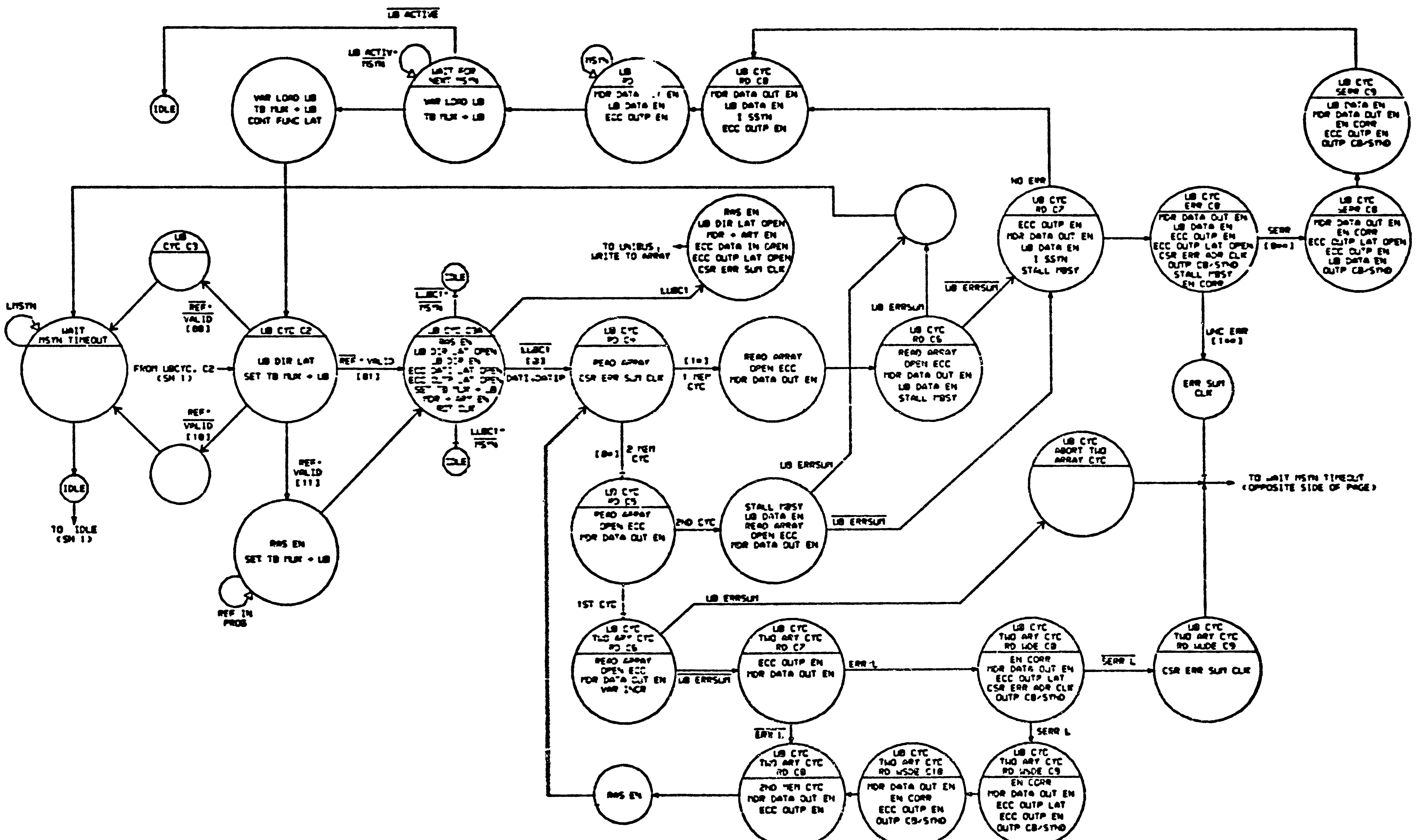

UNIBUS READ TO ARRAY

REVISIONS		
CHK	CHANGE NO.	REV

digital — DRN. D.M. Hafner — DATE 18-NOV-81 — CHK'D.

FIRST USED ON OPTION/MODEL: 11/730

TITLE: 11/730 MEM. CNTRL. MICROCODE FLOWS (K)

SIZE D | CODE FD | NUMBER M8391-0-9 | REV. A

D.M. HAFNER, [1106,1500]MCTFLK.DPL, SCALE F, "D" RELEASE BOX
D.M. HAFNER MCTFLK.FLO[1106,1500] 18-NOV-81 2015

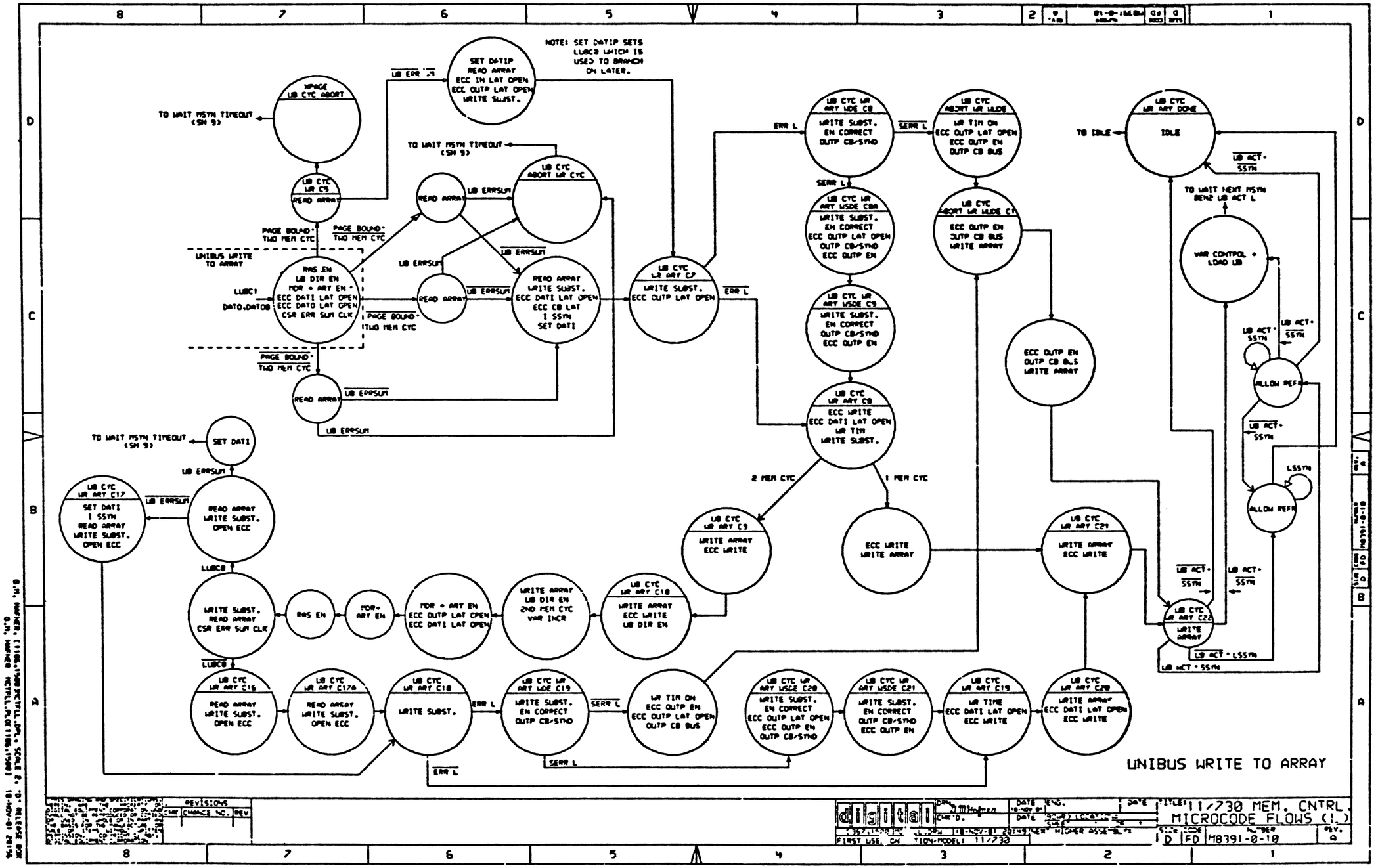
NOTE: SET DATIP SETS LUBC8 WHICH IS USED TO BRANCH ON LATER.
XPAGE LB CYC ABORT
TO WAIT MSYN TIMEOUT (SM 9)
SET DATIP READ ARRAY ECC IN LAT OPEN ECC OUTP LAT OPEN WRITE SUBST.
LB ERR L
LB CYC LB C9 READ ARRAY
LB CYC ABORT LB CYC
LB ERRSUM
PAGE BOUND* TWO MEM CYC
UNIBUS WRITE TO ARRAY
RAS EN LB DIR EN MDR ← ARY EN * ECC DATI LAT OPEN ECC DATO LAT OPEN CSR ERR SUM CLK
LUBC1
DATO,DATOB
READ ARRAY WRITE SUBST. ECC DATI LAT OPEN ECC CB LAT I SSYN SET DATI
LB CYC LB ARY C7 WRITE SUBST. ECC OUTP LAT OPEN
ERR L
SERR L
LB CYC LB ARY WDE C8 WRITE SUBST. EN CORRECT OUTP CB/SYND
LB CYC ABORT LB WDE
LB TIM ON ECC OUTP LAT OPEN ECC OUTP EN OUTP CB BUS
LB CYC LB ARY WDE C8A WRITE SUBST. EN CORRECT ECC OUTP LAT OPEN OUTP CB/SYND ECC OUTP EN
LB CYC ABORT LB WDE C9 ECC OUTP EN OUTP CB BUS WRITE ARRAY
LB CYC LB ARY WDE C9 WRITE SUBST. EN CORRECT OUTP CB/SYND ECC OUTP EN
ECC OUTP EN OUTP CB BUS WRITE ARRAY
LB CYC LB ARY C8 ECC WRITE ECC DATI LAT OPEN LB TIM WRITE SUBST.
2 MEM CYC
1 MEM CYC
LB CYC LB ARY C9 WRITE ARRAY ECC WRITE
ECC WRITE WRITE ARRAY
LB CYC LB ARY C21 WRITE ARRAY ECC WRITE
LB CYC LB ARY C22 WRITE ARRAY
LB ACT* SSYN
LB ACT* LSSYN
LB CYC LB ARY DONE IDLE
TO IDLE
TO WAIT NEXT MSYN BEHZ LB ACT L
VAR CONTROL + LOAD LB
ALLOW REFR
LSSYN
SET DATI
LB CYC LB ARY C17 SET DATI I SSYN READ ARRAY WRITE SUBST. OPEN ECC
READ ARRAY WRITE SUBST. OPEN ECC
LUBC8
WRITE SUBST. READ ARRAY CSR ERR SUM CLK
RAS EN
MDR← ARY EN
MDR + ARY EN ECC OUTP LAT OPEN ECC DATI LAT OPEN
WRITE ARRAY LB DIR EN 2ND MEM CYC VAR INCR
LB CYC LB ARY C18 WRITE ARRAY ECC WRITE LB DIR EN
LB CYC LB ARY C16 READ ARRAY WRITE SUBST. OPEN ECC
LB CYC LB ARY C17A READ ARRAY WRITE SUBST. OPEN ECC
LB CYC LB ARY C18 WRITE SUBST.
LB CYC LB ARY WDE C19 WRITE SUBST. EN CORRECT OUTP CB/SYND
LB TIM ON ECC OUTP EN ECC OUTP LAT OPEN OUTP CB BUS
LB CYC LB ARY WDE C20 WRITE SUBST. EN CORRECT ECC OUTP LAT OPEN ECC OUTP EN OUTP CB/SYND
LB CYC LB ARY WDE C21 WRITE SUBST. EN CORRECT OUTP CB/SYND ECC OUTP EN
LB CYC LB ARY C19 LB TIME ECC DATI LAT OPEN ECC WRITE
LB CYC LB ARY C20 WRITE ARRAY ECC DATI LAT OPEN ECC WRITE
UNIBUS WRITE TO ARRAY
REVISIONS
CHANGE NO.
REV
digital
TITLE: 11/730 MEM. CNTRL MICROCODE FLOWS (1.)
SIZE D
CODE FD
NUMBER M8391-0-10
REV. A

WAIT
LB ACTIV
ALLOW REFR
BYP BSY
ROT CB

LB ACT

ISSUE BG
011100

ALLOW REFR
BYP BSY
SET ADDR PHY
ARB. SET LOCK
GATE DIR + RD CP

LB ACT

ISS BG C4
CLR ERR
GATE DIR + RD CP
BYP BSY
SET BG
ALLOW REFR

ISS BG C5
CLR ERR
CP ERR SUM CLR
GATE DIR + RD CP
LB DIR LAT OPEN
ALLOW REFR
BYP BSY
SET BG

LSACK
TIMEOUT
[0==1]

LSACK
TIMEOUT
[1==0]

MEM BSY
LB DIR LAT OPEN
ALLOW REFR

LSACK

ISS BG C5#
BYP BSY
LB DIR LAT OPEN
ALLOW REFR
ARB. CLR LOCK

INTR

ISS BG C5#
MEM BSY
ALLOW REFR
ROT CB

BG INTR
ROT CB
ALLOW REFR
MEM BSY
CP ERR SUM CLR

ALLOW REFR
MEM BSY

TO RD ECC DIS CMB
<SH 1>

BYP BSY
ALLOW REFR
LB DIR LAT OPEN

ALLOW REFR
LB DIR LAT OPEN
BYP BSY

BYP BSY
ALLOW REFR
LB DIR LAT OPEN

VAR BYP
MEM BSY
ALLOW REFR
LB DIR LAT OPEN

MEM BSY
ALLOW REFR
LB DIR LAT OPEN
LB DIR EN

CPLG L

ISS BG CP
VAR BYP EN
ALLOW REFR
LB DIR EN

CPLG L

IDLE

CPLG L

TO IDLE
<SH 1>

ISS BG C6
VAR BYP
I SSYN
LB DIR EN
ALLOW REFR
MEM BSY

START BG
TIMEOUT
BYP BSY
SET BG
ALLOW REFR
LB DIR LAT OPEN

BG TIMEOUT
C1
BYP BSY
SET BG
ALLOW REFR
LB DIR LAT OPEN

ARB. CLR LOCK
VAR BYP EN
MEM BSY
ALLOW REFR
ROT CB

ISSUE BG

REVISIONS		
LTR	CHANGE NO.	REV

11/730 MEM. CNTRL.
MICROCODE FLOWS (M)
MB391-0-11
A

FIRST USED ON OPTION CODE: 11/730

D.N. MARKER REVISION 1.1 (1980) 1981 1982 1983 1984 1985 1986 1987 1988 1989 1990 1991 1992 1993 1994 1995 1996 1997 1998 1999 2000 2001 2002 2003 2004 2005 2006 2007 2008 2009 2010 2011 2012 2013 2014 2015 2016 2017 2018 2019 2020 2021 2022 2023 2024 2025 2026 2027 2028 2029 2030 2031 2032 2033 2034 2035 2036 2037 2038 2039 2040 2041 2042 2043 2044 2045 2046 2047 2048 2049 2050 2051 2052 2053 2054 2055 2056 2057 2058 2059 2060 2061 2062 2063 2064 2065 2066 2067 2068 2069 2070 2071 2072 2073 2074 2075 2076 2077 2078 2079 2080 2081 2082 2083 2084 2085 2086 2087 2088 2089 2090 2091 2092 2093 2094 2095 2096 2097 2098 2099 2100 2101 2102 2103 2104 2105 2106 2107 2108 2109 2110 2111 2112 2113 2114 2115 2116 2117 2118 2119 2120 2121 2122 2123 2124 2125 2126 2127 2128 2129 2130 2131 2132 2133 2134 2135 2136 2137 2138 2139 2140 2141 2142 2143 2144 2145 2146 2147 2148 2149 2150 2151 2152 2153 2154 2155 2156 2157 2158 2159 2160 2161 2162 2163 2164 2165 2166 2167 2168 2169 2170 2171 2172 2173 2174 2175 2176 2177 2178 2179 2180 2181 2182 2183 2184 2185 2186 2187 2188 2189 2190 2191 2192 2193 2194 2195 2196 2197 2198 2199 2200 2201 2202 2203 2204 2205 2206 2207 2208 2209 2210 2211 2212 2213 2214 2215 2216 2217 2218 2219 2220 2221 2222 2223 2224 2225 2226 2227 2228 2229 2230 2231 2232 2233 2234 2235 2236 2237 2238 2239 2240 2241 2242 2243 2244 2245 2246 2247 2248 2249 2250 2251 2252 2253 2254 2255 2256 2257 2258 2259 2260 2261 2262 2263 2264 2265 2266 2267 2268 2269 2270 2271 2272 2273 2274 2275 2276 2277 2278 2279 2280 2281 2282 2283 2284 2285 2286 2287 2288 2289 2290 2291 2292 2293 2294 2295 2296 2297 2298 2299 2300 2301 2302 2303 2304 2305 2306 2307 2308 2309 2310 2311 2312 2313 2314 2315 2316 2317 2318 2319 2320 2321 2322 2323 2324 2325 2326 2327 2328 2329 2330 2331 2332 2333 2334 2335 2336 2337 2338 2339 2340 2341 2342 2343 2344 2345 2346 2347 2348 2349 2350 2351 2352 2353 2354 2355 2356 2357 2358 2359 2360 2361 2362 2363 2364 2365 2366 2367 2368 2369 2370 2371 2372 2373 2374 2375 2376 2377 2378 2379 2380 2381 2382 2383 2384 2385 2386 2387 2388 2389 2390 2391 2392 2393 2394 2395 2396 2397 2398 2399 2400 2401 2402 2403 2404 2405 2406 2407 2408 2409 2410 2411 2412 2413 2414 2415 2416 2417 2418 2419 2420 2421 2422 2423 2424 2425 2426 2427 2428 2429 2430 2431 2432 2433 2434 2435 2436 2437 2438 2439 2440 2441 2442 2443 2444 2445 2446 2447 2448 2449 2450 2451 2452 2453 2454 2455 2456 2457 2458 2459 2460 2461 2462 2463 2464 2465 2466 2467 2468 2469 2470 2471 2472 2473 2474 2475 2476 2477 2478 2479 2480 2481 2482 2483 2484 2485 2486 2487 2488 2489 2490 2491 2492 2493 2494 2495 2496 2497 2498 2499 2500 2501 2502 2503 2504 2505 2506 2507 2508 2509 2510 2511 2512 2513 2514 2515 2516 2517 2518 2519 2520 2521 2522 2523 2524 2525 2526 2527 2528 2529 2530 2531 2532 2533 2534 2535 2536 2537 2538 2539 2540 2541 2542 2543 2544 2545 2546 2547 2548 2549 2550 2551 2552 2553 2554 2555 2556 2557 2558 2559 2560 2561 2562 2563 2564 2565 2566 2567 2568 2569 2570 2571 2572 2573 2574 2575 2576 2577 2578 2579 2580 2581 2582 2583 2584 2585 2586 2587 2588 2589 2590 2591 2592 2593 2594 2595 2596 2597 2598 2599 2600 2601 2602 2603 2604 2605 2606 2607 2608 2609 2610 2611 2612 2613 2614 2615 2616 2617 2618 2619 2620 2621 2622 2623 2624 2625 2626 2627 2628 2629 2630 2631 2632 2633 2634 2635 2636 2637 2638 2639 2640 2641 2642 2643 2644 2645 2646 2647 2648 2649 2650 2651 2652 2653 2654 2655 2656 2657 2658 2659 2660 2661 2662 2663 2664 2665 2666 2667 2668 2669 2670 2671 2672 2673 2674 2675 2676 2677 2678 2679 2680 2681 2682 2683 2684 2685 2686 2687 2688 2689 2690 2691 2692 2693 2694 2695 2696 2697 2698 2699 2700 2701 2702 2703 2704 2705 2706 2707 2708 2709 2710 2711 2712 2713 2714 2715 2716 2717 2718 2719 2720 2721 2722 2723 2724 2725 2726 2727 2728 2729 2730 2731 2732 2733 2734 2735 2736 2737 2738 2739 2740 2741 2742 2743 2744 2745 2746 2747 2748 2749 2750 2751 2752 2753 2754 2755 2756 2757 2758 2759 2760 2761 2762 2763 2764 2765 2766 2767 2768 2769 2770 2771 2772 2773 2774 2775 2776 2777 2778 2779 2780 2781 2782 2783 2784 2785 2786 2787 2788 2789 2790 2791 2792 2793 2794 2795 2796 2797 2798 2799 2800 2801 2802 2803 2804 2805 2806 2807 2808 2809 2810 2811 2812 2813 2814 2815 2816 2817 2818 2819 2820 2821 2822 2823 2824 2825 2826 2827 2828 2829 2830 2831 2832 2833 2834 2835 2836 2837 2838 2839 2840 2841 2842 2843 2844 2845 2846 2847 2848 2849 2850 2851 2852 2853 2854 2855 2856 2857 2858 2859 2860 2861 2862 2863 2864 2865 2866 2867 2868 2869 2870 2871 2872 2873 2874 2875 2876 2877 2878 2879 2880 2881 2882 2883 2884 2885 2886 2887 2888 2889 2890 2891 2892 2893 2894 2895 2896 2897 2898 2899 2900 2901 2902 2903 2904 2905 2906 2907 2908 2909 2910 2911 2912 2913 2914 2915 2916 2917 2918 2919 2920 2921 2922 2923 2924 2925 2926 2927 2928 2929 2930 2931 2932 2933 2934 2935 2936 2937 2938 2939 2940 2941 2942 2943 2944 2945 2946 2947 2948 2949 2950 2951 2952 2953 2954 2955 2956 2957 2958 2959 2960 2961 2962 2963 2964 2965 2966 2967 2968 2969 2970 2971 2972 2973 2974 2975 2976 2977 2978 2979 2980 2981 2982 2983 2984 2985 2986 2987 2988 2989 2990 2991 2992 2993 2994 2995 2996 2997 2998 2999 3000 3001 3002 3003 3004 3005 3006 3007 3008 3009 3010 3011 3012 3013 3014 3015 3016 3017 3018 3019 3020 3021 3022 3023 3024 3025 3026 3027 3028 3029 3030 3031 3032 3033 3034 3035 3036 3037 3038 3039 3040 3041 3042 3043 3044 3045 3046 3047 3048 3049 3050 3051 3052 3053 3054 3055 3056 3057 3058 3059 3060 3061 3062 3063 3064 3065 3066 3067 3068 3069 3070 3071 3072 3073 3074 3075 3076 3077 3078 3079 3080 3081 3082 3083 3084 3085 3086 3087 3088 3089 3090 3091 3092 3093 3094 3095 3096 3097 3098 3099 3100 3101 3102 3103 3104 3105 3106 3107 3108 3109 3110 3111 3112 3113 3114 3115 3116 3117 3118 3119 3120 3121 3122 3123 3124 3125 3126 3127 3128 3129 3130 3131 3132 3133 3134 3135 3136 3137 3138 3139 3140 3141 3142 3143 3144 3145 3146 3147 3148 3149 3150 3151 3152 3153 3154 3155 3156 3157 3158 3159 3160 3161 3162 3163 3164 3165 3166 3167 3168 3169 3170 3171 3172 3173 3174 3175 3176 3177 3178 3179 3180 3181 3182 3183 3184 3185 3186 3187 3188 3189 3190 3191 3192 3193 3194 3195 3196 3197 3198 3199 3200 3201 3202 3203 3204 3205 3206 3207 3208 3209 3210 3211 3212 3213 3214 3215 3216 3217 3218 3219 3220 3221 3222 3223 3224 3225 3226 3227 3228 3229 3230 3231 3232 3233 3234 3235 3236 3237 3238 3239 3240 3241 3242 3243 3244 3245 3246 3247 3248 3249 3250 3251 3252 3253 3254 3255 3256 3257 3258 3259 3260 3261 3262 3263 3264 3265 3266 3267 3268 3269 3270 3271 3272 3273 3274 3275 3276 3277 3278 3279 3280 3281 3282 3283 3284 3285 3286 3287 3288 3289 3290 3291 3292 3293 3294 3295 3296 3297 3298 3299 3300 3301 3302 3303 3304 3305 3306 3307 3308 3309 3310 3311 3312 3313 3314 3315 3316 3317 3318 3319 3320 3321 3322 3323 3324 3325 3326 3327 3328 3329 3330 3331 3332 3333 3334 3335 3336 3337 3338 3339 3340 3341 3342 3343 3344 3345 3346 3347 3348 3349 3350 3351 3352 3353 3354 3355 3356 3357 3358 3359 3360 3361 3362 3363 3364 3365 3366 3367 3368 3369 3370 3371 3372 3373 3374 3375 3376 3377 3378 3379 3380 3381 3382 3383 3384 3385 3386 3387 3388 3389 3390 3391 3392 3393 3394 3395 3396 3397 3398 3399 3400 3401 3402 3403 3404 3405 3406 3407 3408 3409 3410 3411 3412 3413 3414 3415 3416 3417 3418 3419 3420 3421 3422 3423 3424 3425 3426 3427 3428 3429 3430 3431 3432 3433 3434 3435 3436 3437 3438 3439 3440 3441 3442 3443 3444 3445 3446 3447 3448 3449 3450 3451 3452 3453 3454 3455 3456 3457 3458 3459 3460 3461 3462 3463 3464 3465 3466 3467 3468 3469 3470 3471 3472 3473 3474 3475 3476 3477 3478 3479 3480 3481 3482 3483 3484 3485 3486 3487 3488 3489 3490 3491 3492 3493 3494 3495 3496 3497 3498 3499 3500 3501 3502 3503 3504 3505 3506 3507 3508 3509 3510 3511 3512 3513 3514 3515 3516 3517 3518 3519 3520 3521 3522 3523 3524 3525 3526 3527 3528 3529 3530 3531 3532 3533 3534 3535 3536 3537 3538 3539 3540 3541 3542 3543 3544 3545 3546 3547 3548 3549 3550 3551 3552 3553 3554 3555 3556 3557 3558 3559 3560 3561 3562 3563 3564 3565 3566 3567 3568 3569 3570 3571 3572 3573 3574 3575 3576 3577 3578 3579 3580 3581 3582 3583 3584 3585 3586 3587 3588 3589 3590 3591 3592 3593 3594 3595 3596 3597 3598 3599 3600 3601 3602 3603 3604 3605 3606 3607 3608 3609 3610 3611 3612 3613 3614 3615 3616 3617 3618 3619 3620 3621 3622 3623 3624 3625 3626 3627 3628 3629 3630 3631 3632 3633 3634 3635 3636 3637 3638 3639 3640 3641 3642 3643 3644 3645 3646 3647 3648 3649 3650 3651 3652 3653 3654 3655 3656 3657 3658 3659 3660 3661 3662 3663 3664 3665 3666 3667 3668 3669 3670 3671 3672 3673 3674 3675 3676 3677 3678 3679 3680 3681 3682 3683 3684 3685 3686 3687 3688 3689 3690 3691 3692 3693 3694 3695 3696 3697 3698 3699 3700 3701 3702 3703 3704 3705 3706 3707 3708 3709 3710 3711 3712 3713 3714 3715 3716 3717 3718 3719 3720 3721 3722 3723 3724 3725 3726 3727 3728 3729 3730 3731 3732 3733 3734 3735 3736 3737 3738 3739 3740 3741 3742 3743 3744 3745 3746 3747 3748 3749 3750 3751 3752 3753 3754 3755 3756 3757 3758 3759 3760 3761 3762 3763 3764 3765 3766 3767 3768 3769 3770 3771 3772 3773 3774 3775 3776 3777 3778 3779 3780 3781 3782 3783 3784 3785 3786 3787 3788 3789 3790 3791 3792 3793 3794 3795 3796 3797 3798 3799 3800 3801 3802 3803 3804 3805 3806 3807 3808 3809 3810 3811 3812 3813 3814 3815 3816 3817 3818 3819 3820 3821 3822 3823 3824 3825 3826 3827 3828 3829 3830 3831 3832 3833 3834 3835 3836 3837 3838 3839 3840 3841 3842 3843 3844 3845 3846 3847 3848 3849 3850 3851 3852 3853 3854 3855 3856 3857 3858 3859 3860 3861 3862 3863 3864 3865 3866 3867 3868 3869 3870 3871 3872 3873 3874 3875 3876 3877 3878 3879 3880 3881 3882 3883 3884 3885 3886 3887 3888 3889 3890 3891 3892 3893 3894 3895 3896 3897 3898 3899 3900 3901 3902 3903 3904 3905 3906 3907 3908 3909 3910 3911 3912 3913 3914 3915 3916 3917 3918 3919 3920 3921 3922 3923 3924 3925 3926 3927 3928 3929 3930 3931 3932 3933 3934 3935 3936 3937 3938 3939 3940 3941 3942 3943 3944 3945 3946 3947 3948 3949 3950 3951 3952 3953 3954 3955 3956 3957 3958 3959 3960 3961 3962 3963 3964 3965 3966 3967 3968 3969 3970 3971 3972 3973 3974 3975 3976 3977 3978 3979 3980 3981 3982 3983 3984 3985 3986 3987 3988 3989 3990 3991 3992 3993 3994 3995 3996 3997 3998 3999 4000 4001 4002 4003 4004 4005 4006 4007 4008 4009 4010 4011 4012 4013 4014 4015 4016 4017 4018 4019 4020 4021 4022 4023 4024 4025 4026 4027 4028 4029 4030 4031 4032 4033 4034 4035 4036 4037 4038 4039 4040 4041 4042 4043 4044 4045 4046 4047 4048 4049 4050 4051 4052 4053 4054 4055 4056 4057 4058 4059 4060 4061 4062 4063 4064 4065 4066 4067 4068 4069 4070 4071 4072 4073 4074 4075 4076 4077 4078 4079 4080 4081 4082 4083 4084 4085 4086 4087 4088 4089 4090 4091 4092 4093 4094 4095 4096

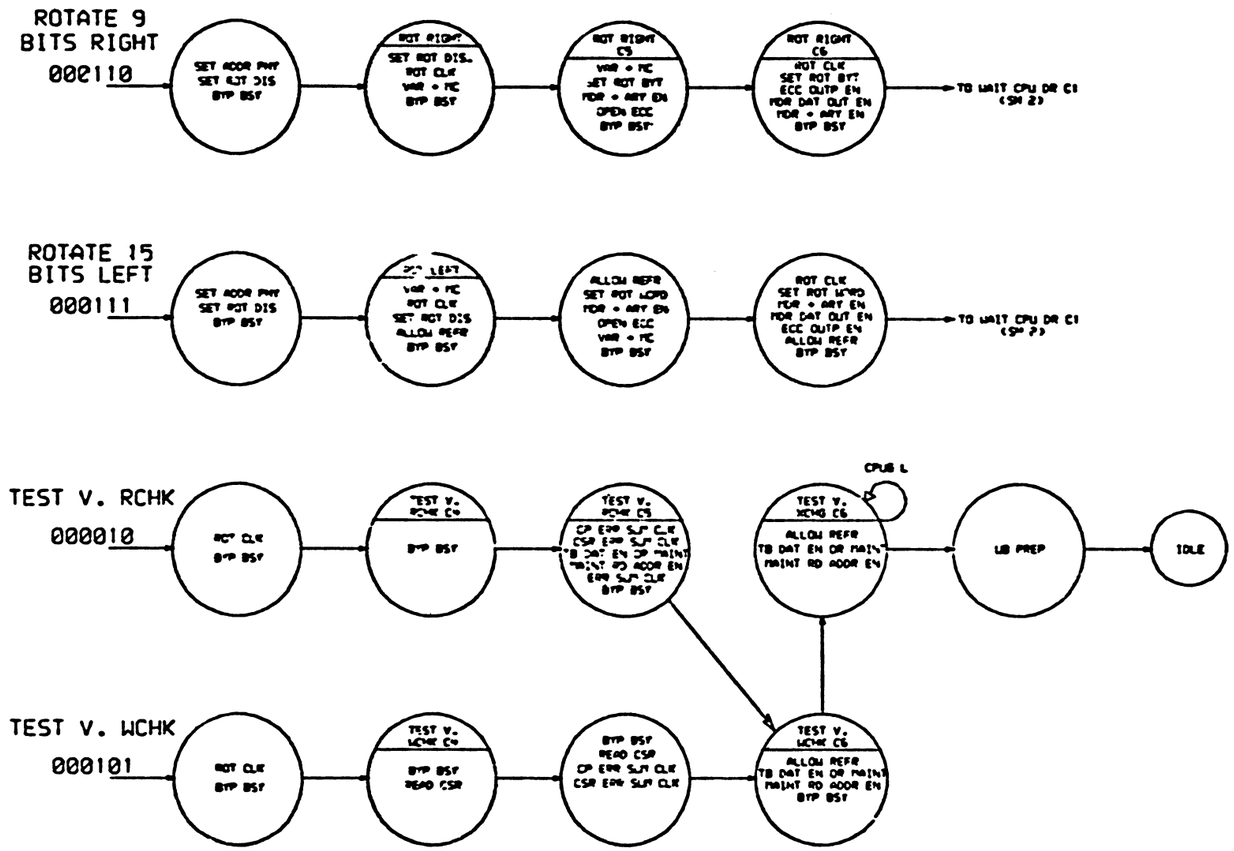

TEST V. RCHK, WCHK
ROTATE BYTE, WORD

TITLE: 11/730 MEM. CNTRL. MICROCODE FLOWS (N)			
SIZE D	CODE FD	NUMBER M8391-0-12	REV. A

FIRST USED ON OPTION/MODEL: 11/730

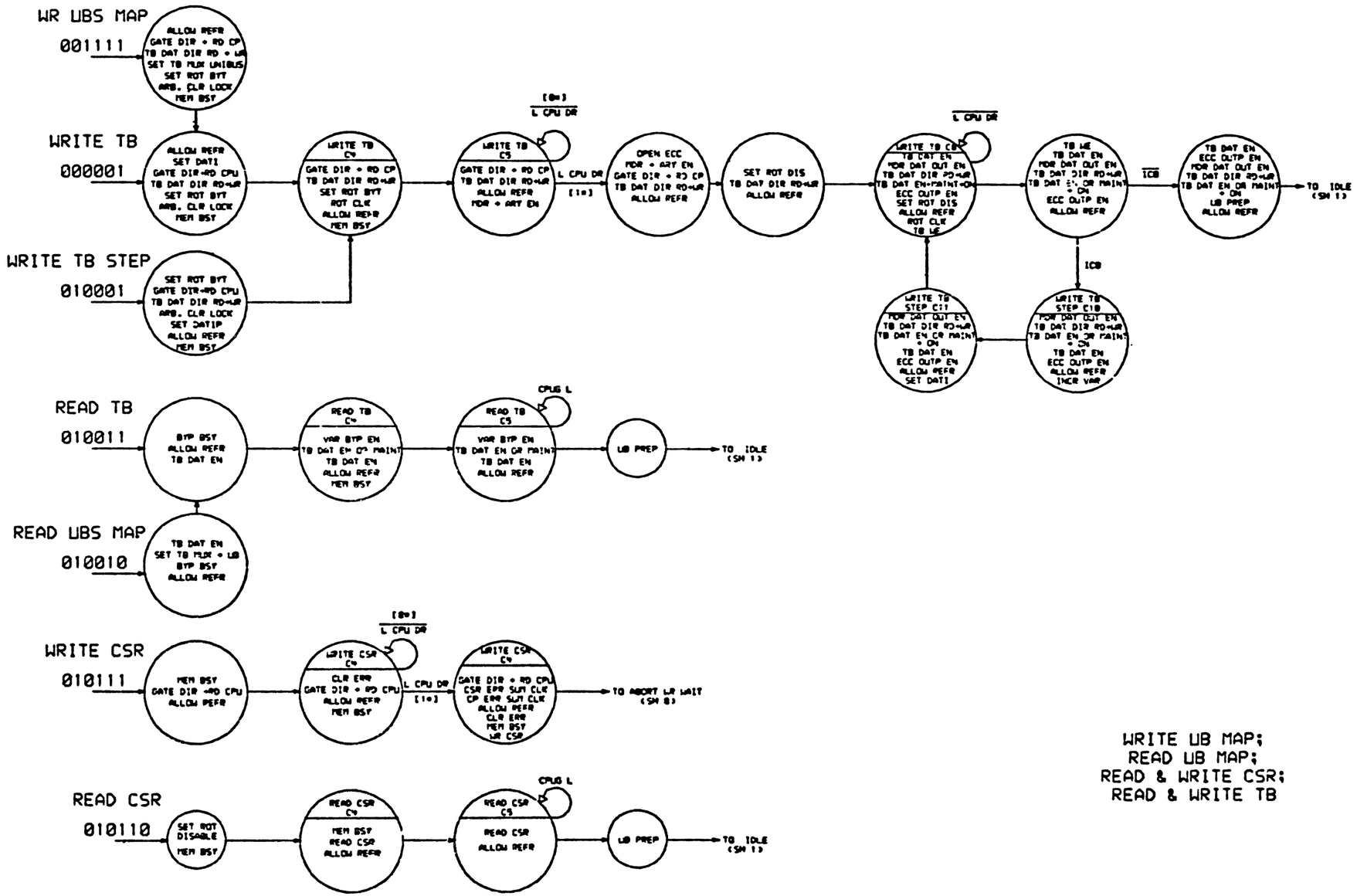
WR UBS MAP
001111
ALLOW REFR
GATE DIR + RD CP
TB DAT DIR RD + LB
SET TB FLSH UNIBUS
SET ROT BYT
ARB. CLR LOCK
MEM BSY
WRITE TB
000001
ALLOW REFR
SET DAT1
GATE DIR+RD CPU
TB DAT DIR RD+LB
SET ROT BYT
ARB. CLR LOCK
MEM BSY
WRITE TB C9
GATE DIR + RD CP
TB DAT DIR RD+LB
ALLOW REFR
MDR + ARY EN
[BR]
L CPU DR
L CPU DR
[10]
OPEN ECC
MDR + ARY EN
GATE DIR + RD CP
TB DAT DIR RD+LB
ALLOW REFR
SET ROT DIS
TB DAT DIR RD+LB
ALLOW REFR
WRITE TB C8
TB DAT EN
MDR DAT OUT EN
TB DAT DIR RD+LB
TB DAT EN+MAINT+CH
ECC OUTP EN
SET ROT DIS
ALLOW REFR
ROT CLR
TB WE
L CPU DR
TB WE
TB DAT EN
MDR DAT OUT EN
TB DAT DIR RD+LB
TB DAT EN OR MAINT + CH
ECC OUTP EN
ALLOW REFR
ICB
TB DAT EN
ECC OUTP EN
MDR DAT OUT EN
TB DAT DIR RD+LB
TB DAT EN OR MAINT + CH
LB PREP
ALLOW REFR
TO IDLE (SM 1)
WRITE TB STEP
010001
SET ROT BYT
GATE DIR+RD CPU
TB DAT DIR RD+LB
ARB. CLR LOCK
SET DATIP
ALLOW REFR
MEM BSY
WRITE TB STEP C11
MDR DAT OUT EN
TB DAT DIR RD+LB
TB DAT EN OR MAINT + CH
TB DAT EN
ECC OUTP EN
ALLOW REFR
SET DATI
WRITE TB STEP C10
MDR DAT OUT EN
TB DAT DIR RD+LB
TB DAT EN OR MAINT + CH
TB DAT EN
ECC OUTP EN
ALLOW REFR
INCR VAR
READ TB
010011
BYP BSY
ALLOW REFR
TB DAT EN
READ TB C8
VAR BYP EN
TB DAT EN C8 MAINT
TB DAT EN
ALLOW REFR
MEM BSY
READ TB C9
CPUS L
VAR BYP EN
TB DAT EN OR MAINT
TB DAT EN
ALLOW REFR
LB PREP
TO IDLE (SM 1)
READ UBS MAP
010010
TB DAT EN
SET TB FLSH + LB
BYP BSY
ALLOW REFR
WRITE CSR
010111
MEM BSY
GATE DIR +RD CPU
ALLOW REFR
WRITE CSR C8
CLR ERR
GATE DIR + RD CPU
ALLOW REFR
MEM BSY
[BR]
L CPU DR
L CPU DR
[10]
WRITE CSR C9
GATE DIR + RD CPU
CSR ERR SUM CLR
CP ERR SUM CLR
ALLOW REFR
CLR ERR
MEM BSY
WR CSR
TO ABORT LB WAIT (SM 8)
READ CSR
010110
SET ROT DISABLE
MEM BSY
READ CSR C8
MEM BSY
READ CSR
ALLOW REFR
READ CSR C9
CPUS L
READ CSR
ALLOW REFR
LB PREP
TO IDLE (SM 1)
WRITE UB MAP;
READ UB MAP;
READ & WRITE CSR;
READ & WRITE TB

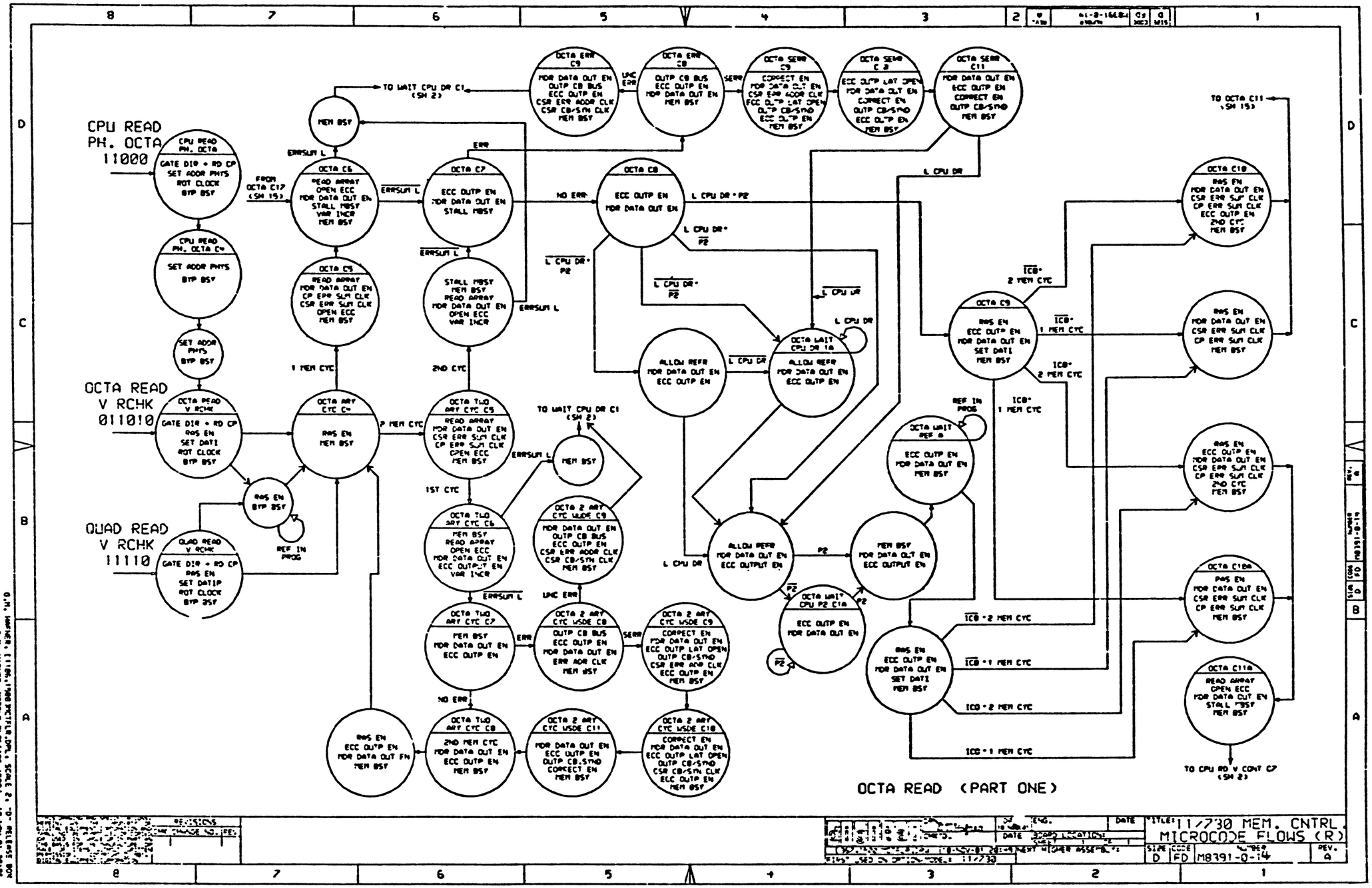
CPU READ PH. OCTA 11000
OCTA READ V RCHK 01101 0
QUAD READ V RCHK 11110
OCTA READ (PART ONE)
TO WAIT CPU DR C1 (SH 2)
FROM OCTA C17 (SH 19)
TO OCTA C11 (SH 19)
TO CPU RD V CONT CP (SH 2)
MEM BSY
ERRSUM L
ERR
NO ERR
L CPU DR
L CPU DR * P2
L CPU DR * P2
L CPU DR * P2
1 MEM CYC
2 MEM CYC
1ST CYC
2ND CYC
REF IN PROG
ICB * 2 MEM CYC
ICB * 1 MEM CYC
ICB * 2 MEM CYC
ICB * 1 MEM CYC
ICB * 1 MEM CYC
TITLE: 11/730 MEM. CNTRL MICROCODE FLOWS (R)
SIZE D
CODE FD
M8791-0-14
REV. A

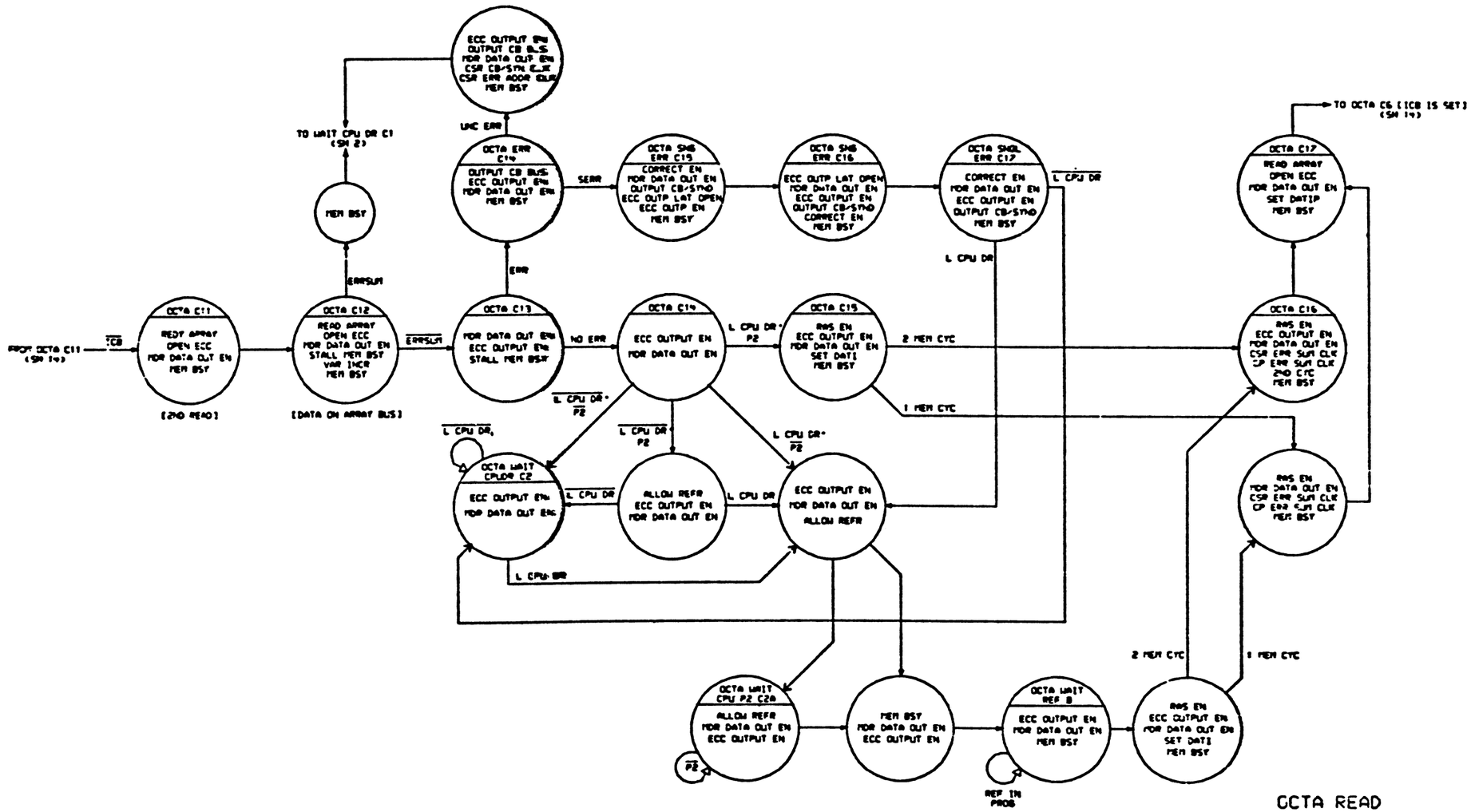

OCTA READ
(PART TWO)

D.M. HANNA [1180,1500]MCP1S.PLT;SCALE 2, 0, 0 10-NOV-81 21:02
D.M. HANNA [1180,1500]MCP1S.DPS; SCALE 2, 0, 0 10-NOV-81 21:02

REVISIONS		
	CHANGE NO.	REV

DRN		DATE	TITLE: 11/730 MEM. CNTRL MICROCODE FLOWS (S)
CHK'D.		DATE	
ISSUED	18-NOV-81 20:49		SIZE D CODE FD
FIRST USED ON OPTION-MODEL: 11/730			MB391-2-15 REV. A

OCTA WRITE
V WCHK
11101

WRITE PH.
OCTA
10000

OCTA ALIGNED WRITE
(MUST BE ALIGNED)

TITLE: 11/730 MEM. CNTRL MICROCODE FLOWS (T)
SIZE D | CODE FD | NUMBER M8391-0-16 | REV. A

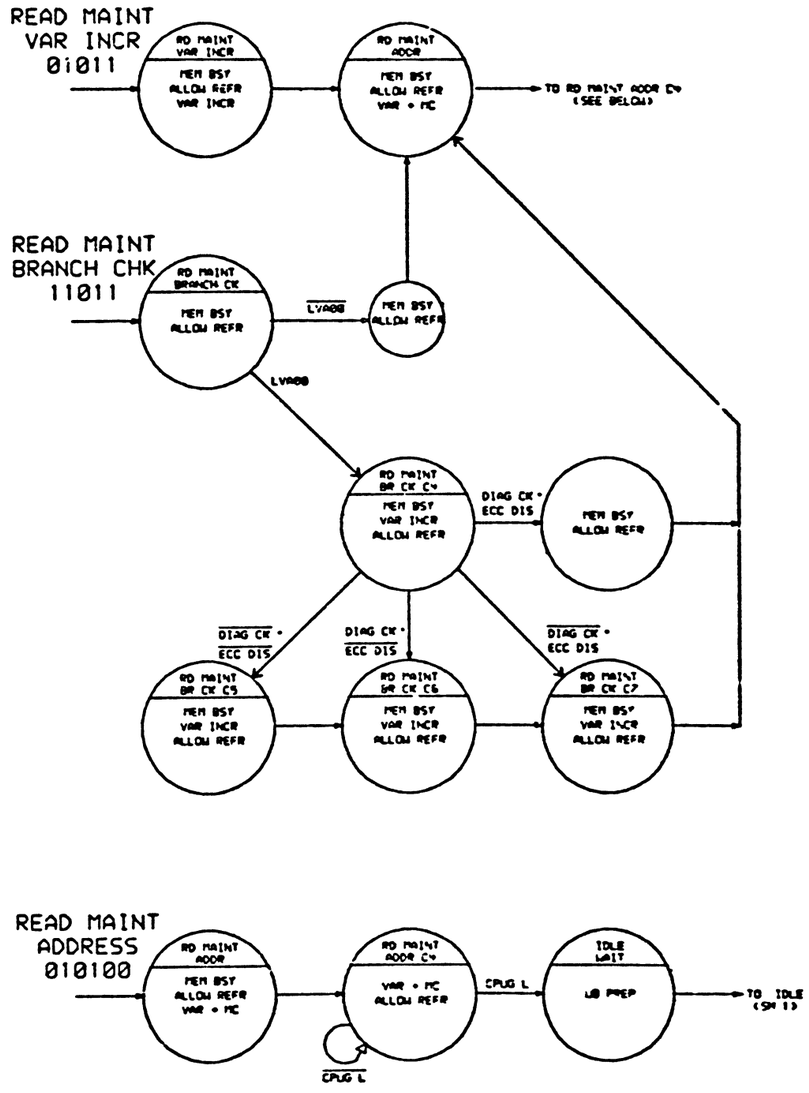

RD MAINT ADDR;
RD MAINT VAR INCR;
RD MAINT BRANCH CK

REVISIONS

TITLE: 11/730 MEM. CNTRL. MICROCODE FLOWS (L)

SIZE D | CODE FD | NUMBER M8391-2-17 | REV. A

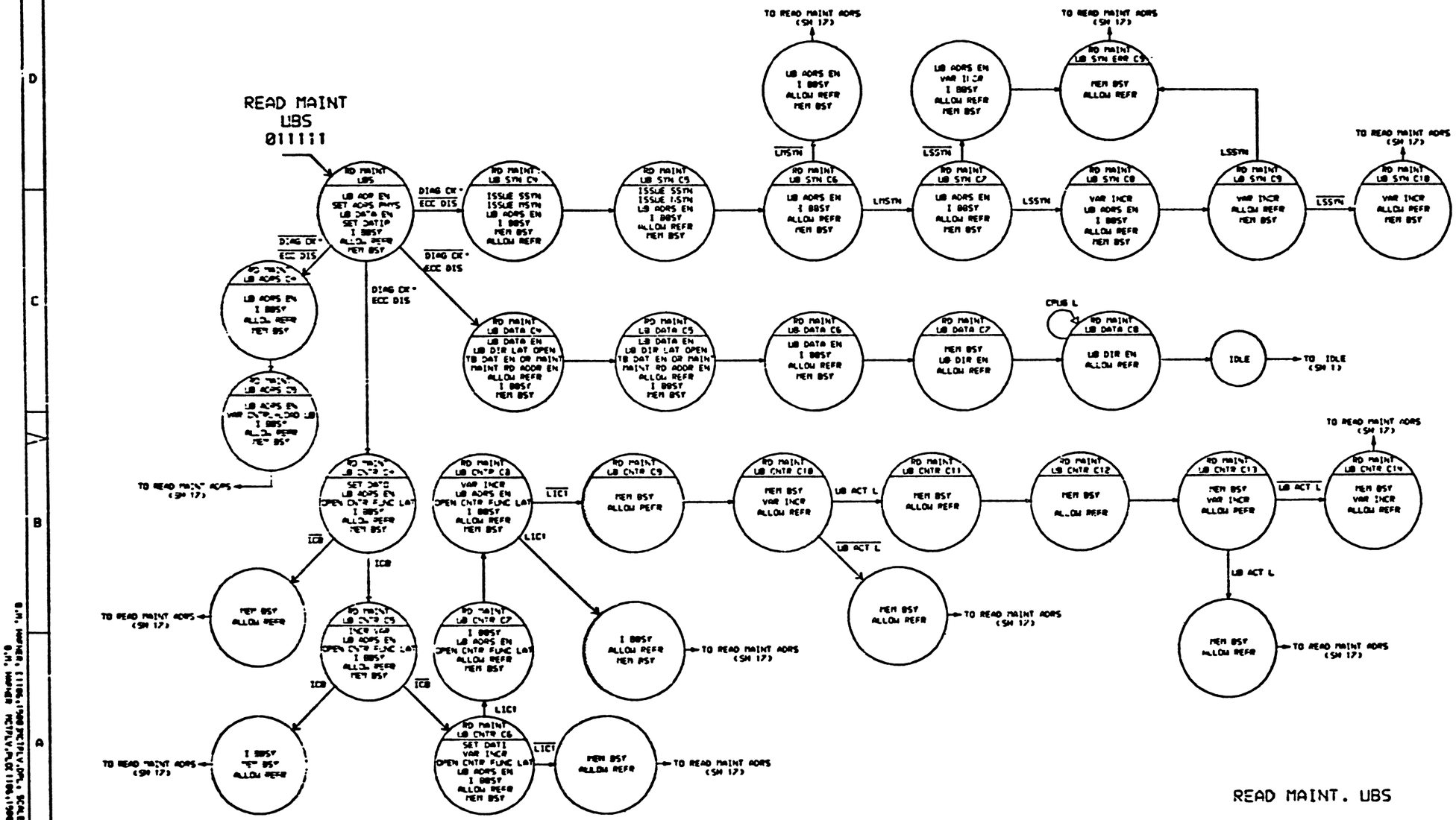
READ MAINT
UBS
011111
RD MAINT
UBS
UB ADR EN
SET ADRS PHYS
UB DATA EN
SET DATIP
I BUSY
ALLOW REFR
MEM BSY
DIAG CK*
ECC DIS
RD MAINT
UB SYN C9
ISSUE SSYN
ISSUE MSYN
UB ADRS EN
I BUSY
MEM BSY
ALLOW REFR
RD MAINT
UB SYN C9
ISSUE SSYN
ISSUE LSYN
UB ADRS EN
I BUSY
ALLOW REFR
MEM BSY
RD MAINT
UB SYN C6
UB ADRS EN
I BUSY
ALLOW REFR
MEM BSY
LMSYN
RD MAINT
UB SYN C7
UB ADRS EN
I BUSY
ALLOW REFR
MEM BSY
LSSYN
RD MAINT
UB SYN C8
VAR INCR
UB ADRS EN
I BUSY
ALLOW REFR
MEM BSY
RD MAINT
UB SYN C9
VAR INCR
ALLOW REFR
MEM BSY
RD MAINT
UB SYN C10
VAR INCR
ALLOW REFR
MEM BSY
TO READ MAINT ADRS
(SH 17)
RD MAINT
UB ADRS C9
UB ADRS EN
I BUSY
ALLOW REFR
MEM BSY
RD MAINT
UB DATA C4
UB DATA EN
UB DIR LAT OPEN
TB DAT EN OR MAINT
MAINT RD ADDR EN
ALLOW REFR
I BUSY
MEM BSY
RD MAINT
UB DATA C5
UB DATA EN
UB DIR LAT OPEN
TB DAT EN OR MAINT
MAINT RD ADDR EN
ALLOW REFR
I BUSY
MEM BSY
RD MAINT
UB DATA C6
UB DATA EN
I BUSY
ALLOW REFR
MEM BSY
RD MAINT
UB DATA C7
MEM BSY
UB DIR EN
ALLOW REFR
RD MAINT
UB DATA C8
UB DIR EN
ALLOW REFR
CPUS L
IDLE
TO IDLE
(SH 1)
RD MAINT
UB CNTR C8
SET DATI
VAR INCR
UB ADRS EN
OPEN CNTR FUNC LAT
I BUSY
ALLOW REFR
MEM BSY
RD MAINT
UB CNTR C9
MEM BSY
ALLOW REFR
RD MAINT
UB CNTR C10
MEM BSY
VAR INCR
ALLOW REFR
RD MAINT
UB CNTR C11
MEM BSY
ALLOW REFR
RD MAINT
UB CNTR C12
MEM BSY
ALLOW REFR
RD MAINT
UB CNTR C13
MEM BSY
VAR INCR
ALLOW REFR
RD MAINT
UB CNTR C14
MEM BSY
VAR INCR
ALLOW REFR
UB ACT L
ICB
LICI
TO READ MAINT ADRS
(SH 17)
I BUSY
MEM BSY
ALLOW REFR
READ MAINT. UBS
11/730 MEM. CNTRL
MICROCODE FLOWS (V)
M8391-0-18
SIZE D
CODE FD
REV. A

MAINT. ECC DATA
(PART ONE)

REVISIONS	
LTR	CHANGE NO. REV

11/730 MEM. CNTRL MICROCODE LISTINGS (N)

SIZE D | CODE ED | NUMBER M8391-2-19 | REV. A

FIRST USED ON OPTION-MODEL: 11/730

MAINT. ECC DATA
(PART TWO)

REVISIONS

LTR	CHANGE NO.	REV

TITLE: 11/730 MEM. CNTRL MICROCODE FLOWS (X)

SIZE D | CODE FD | M8391-0-20 | REV. A

FIRST USED ON OPTION/MODEL: 11/730

PART NUMBER: 23-025J5-00

DEVICE TYPE: PAL16L8

SCHEMATIC SHEET #:D-CS-M8391-0-MCTK

LOCATION/DESCRIPTION: E44/ MCTK MDR AND DIR CONTROL

ASSIGNED PIN NUMBER:

1= COMP.MODE	8= LVA00	15=/OPEN.LAT0
2=/X.PHYS.ADDR.SEL	9=/W0	16=/X.LAT3
3=/RS1	10= GND	17=/X.LAT1
4=/RS0	11= WR.SUB	18=/X.LAT2
5=/A1	12=/OPEN.LAT3	19=/OP.ERR
6=/A0	13=/OPEN.LAT2	20= VCC
7= CPU.CYCLE	14=/OPEN.LAT1	

EQUATIONS:

```
IF(VCC) OPEN.LAT3:=/WR.SUB
                  +/CPU.CYCLE=X.LAT3
                  +CPU.CYCLE=W0=WR.SUB=/RS1=/RS0=A1=A0
                  +CPU.CYCLE=W0=WR.SUB=/RS1=RS0=A1
                  +CPU.CYCLE=/W0=WR.SUB=/RS1=RS0=A1=A0
                  +CPU.CYCLE=WR.SUB=RS1=RS0

IF(VCC) X.LAT3:=W0=WR.SUB=/A1
               +W0=WR.SUB=A1=/A0=/RS0=/LVA00
               +W0=WR.SUB=A1=A0=/RS0=LVA00
               +/W0=WR.SUB

IF(VCC) X.LAT2:=/CPU.CYCLE=W0=WR.SUB=/A1=/A0
               +/CPU.CYCLE=W0=WR.SUB=A1=A0
               +/CPU.CYCLE=W0=WR.SUB=/A1=A0=/RS0=/LVA00
               +/CPU.CYCLE=W0=WR.SUB=A1=/A0=/RS0=LVA00
               +/CPU.CYCLE=/W0=WR.SUB
               +/WR.SUB

IF(VCC) OPEN.LAT2:=X.LAT2
                  +CPU.CYCLE=W0=WR.SUB=/A1=A0=/RS1=RS0
                  +CPU.CYCLE=W0=WR.SUB=A1=/A0=/RS1
                  +CPU.CYCLE=/W0=WR.SUB=A1=A0=/RS1=RS0
                  +CPU.CYCLE=W0=WR.SUB=A1=/A0=RS1=RS0
                  +CPU.CYCLE=WR.SUB=/A1=A0=RS1=RS0
                  +CPU.CYCLE=WR.SUB=A1=/A0=RS1=RS0

IF(VCC) X.LAT1:=W0=WR.SUB=A1
               +W0=WR.SUB=/A1=/A0=/RS0=/LVA00
               +W0=WR.SUB=/A1=A0=/RS0=LVA00
               +/W0=WR.SUB

IF(VCC) OPEN.LAT1:=/WR.SUB
                  +/CPU.CYCLE=X.LAT1
                  +CPU.CYCLE=W0=WR.SUB=/A1=A0=/RS1=/RS0
                  +CPU.CYCLE=W0=WR.SUB=/A1=/RS1=RS0
                  +CPU.CYCLE=/W0=WR.SUB=A1=A0=/RS1=RS0
                  +CPU.CYCLE=W0=WR.SUB=/A1=/A0=RS1=RS0
                  +CPU.CYCLE=WR.SUB=/A1=A0=RS1=RS0

IF(VCC) OPEN.LAT0:=/WR.SUB
                  +/CPU.CYCLE=W0=WR.SUB=A1
                  +/CPU.CYCLE=W0=WR.SUB=/A1=A0
                  +/CPU.CYCLE=W0=WR.SUB=LVA00=/RS0
                  +CPU.CYCLE=W0=WR.SUB=/A1=/A0

IF(VCC) OP.ERR:=COMP.MODE=RS0=A0
               +X.PHYS.ADDR.SEL=RS1
               +X.PHYS.ADDR.SEL=RS0=A0
```

PART NUMBER: 23-042J5-00

DEVICE TYPE: PAL16L8

SCHEMATIC SHEET #:D-CS-M8391-0-MCTA

LOCATION/DESCRIPTION: E46/ PHYSICAL ADDRESS DECODER A

ASSIGNED PIN NUMBER:

1=/FP3A	8= PA20	15= PA22
2=/FP4A	9= PA21	16=/SELC
3=/FP3B	10= GND	17=/SELB
4=/FP4B	11=/INH.WCS.SEL	18=/SELA
5= PA23	12=/PMXM	19=/UB.PH.ADDR.SEL
6= PA18	13=/FP3C	20= VCC
7= PA19	14=/FP4C	

EQUATIONS:

```
IF(VCC) PMXM:=/SELA=/SELB=/SELC=/PA23
             +/SELA=/SELB=/SELC=/PA22
             +/SELA=/SELB=/SELC=/PA21
             +/SELA=/SELB=/SELC=/PA20
             +/SELA=/SELB=/SELC=/PA19
             +/SELA=/SELB=/SELC=/PA18

IF(VCC) UB.PH.ADDR.SEL:=PA23=PA22=PA21=PA20=PA19=PA18

IF(VCC) SELC:=FP4C=/PA23=/PA22=PA21=/PA20=/PA19=PA18
             +FP4C=/PA23=/PA22=PA21=/PA20=PA19=/PA18=/INH.WCS.SEL
             +FP4C=FP3C=/PA23=/PA22=PA21=/PA20=PA19=PA18
             +FP4C=FP3C=/PA23=/PA22=PA21=PA20=/PA19=/PA18=/INH.WCS.S
             +/FP4C=FP3C=/PA23=/PA22=/PA21=/PA20=PA19=/PA18
             +FP4C=/PA23=/PA22=PA21=/PA20=PA19=/PA18=INH.WCS.SEL
             +FP4C=FP3C=/PA23=/PA22=PA21=/PA20=PA19=/PA18=INH.WCS.SE

IF(VCC) SELB:=FP4B=/PA23=/PA22=/PA21=PA20=/PA19=PA18
             +FP4B=/PA23=/PA22=/PA21=PA20=PA19=/PA18=/INH.WCS.SEL
             +FP4B=FP3B=/PA23=/PA22=/PA21=PA20=PA19=PA18
             +FP4B=FP3B=/PA23=/PA22=PA21=/PA20=/PA19=/PA18=/INH.WCS.
             +/FP4B=FP3B=/PA23=/PA22=/PA21=/PA20=/PA19=PA18
             +FP4B=/PA23=/PA22=/PA21=PA20=/PA19=/PA18=INH.WCS.SEL
             +FP4B=FP3B=/PA23=/PA22=/PA21=PA20=PA19=/PA18=INH.WCS.SE

IF(VCC) SELA:=FP4A=/PA23=/PA22=/PA21=/PA20=/PA19=PA18
             +FP4A=/PA23=/PA22=/PA21=/PA20=PA19=/PA18=/INH.WCS.SEL
             +FP4A=FP3A=/PA23=/PA22=/PA21=/PA20=PA19=PA18
             +FP4A=FP3A=/PA23=/PA22=/PA21=PA20=/PA19=/PA18=/INH.WCS.
             +/FP4A=FP3A=/PA23=/PA22=/PA21=/PA20=/PA19=PA18
             +FP4A=/PA23=/PA22=/PA21=/PA20=/PA19=/PA18=INH.WCS.SEL
             +FP4A=FP3A=/PA23=/PA22=/PA21=/PA20=PA19=/PA18=INH.WCS.S
```

PART NUMBER: 23-043J5-00

DEVICE TYPE: PAL16L8

SCHEMATIC SHEET #:D-CS-M8391-0-MCTA

LOCATION/DESCRIPTION: E55/ PHYSICAL ADDRESS DECODER B

ASSIGNED PIN NUMBER:

1=/FP3D	8= PA20	15= PA22
2=/FP4D	9= PA21	16=/UB.ADAP.REG.SEL
3=/FP3E	10= GND	17=/SELE
4=/FP4E	11=/INH.WCS.SEL	18=/SELD
5= PA23	12=/NXM	19=/SEL.WCS
6= PA18	13=/PNXM	20= VCC
7= PA19	14=/16K.RAM	

EQUATIONS:

```
IF(VCC) NXM:=PNXM=/UB.ADAP.REG.SEL=/SELD=/SELE=16K.RAM
            +PNXM=/UB.ADAP.REG.SEL=/SELD=/SELE=PA23
            +PNXM=/UB.ADAP.REG.SEL=/SELD=/SELE=PA22
            +PNXM=/UB.ADAP.REG.SEL=/SELD=/SELE=PA21
            +PNXM=/UB.ADAP.REG.SEL=/SELD=/SELE=PA20
            +PNXM=/UB.ADAP.REG.SEL=/SELD=/SELE=PA19
            +PNXM=/UB.ADAP.REG.SEL=/SELD=/SELE=PA18

IF(VCC) UB.ADAP.REG.SEL:=PA23=PA22=PA21=PA20=/PA19=PA18
                        +PA23=PA22=PA21=PA20=PA19=/PA18
                        +PA23=PA22=PA21=PA20=/PA19=PA18

IF(VCC) SEL.WCS:=/16K.RAM=/PA23=/PA22=/PA21=/PA20=/PA19
                  =/PA18=/INH.WCS.SEL

IF(VCC) SELE:=/16K.RAM=FP4E=/PA23=PA22=/PA21=/PA20=/PA19=PA18
              +/16K.RAM=FP4E=/PA23=PA22=/PA21=/PA20=PA19
                =/PA18=/INH.WCS.SEL
              +/16K.RAM=FP4E=FP3E=/PA23=PA22=/PA21=/PA20=PA19=PA18
              +/16K.RAM=FP4E=FP3E=/PA23=PA22=/PA21=PA20=/PA19
                =/PA18=/INH.WCS.SEL
              +16K.RAM=/FP4E=FP3E=/PA23=/PA22=/PA21=PA20=/PA19=/PA18
              +/16K.RAM=FP4E=/PA23=PA22=/PA21=/PA20=/PA19
                =/PA18=/INH.WCS.SEL
              +/16K.RAM=FP4E=FP3E=/PA23=PA22=/PA21=/PA20=PA19
                =/PA18=INH.WCS.SEL

IF(VCC) SELD:=/16K.RAM=FP4D=/PA23=/PA22=PA21=PA20=/PA19=PA18
              +/16K.RAM=FP4D=/PA23=/PA22=PA21=PA20=PA19
                =/PA18=/INH.WCS.SEL
              +/16K.RAM=FP4D=FP3D=/PA23=/PA22=PA21=PA20=PA19=PA18
              +/16K.RAM=FP4D=FP3D=/PA23=PA22=/PA21=/PA20=/PA19
                =/PA18=/INH.WCS.SEL
              +16K.RAM=/FP4D=FP3D=/PA23=/PA22=/PA21=PA20=/PA19
                =PA18
              +/16K.RAM=FP4D=/PA23=PA22=PA21=PA20=/PA19
                =/PA18=/INH.WCS.SEL
              +/16K.RAM=FP4D=FP3D=/PA23=/PA22=PA21=PA20=PA19
                =/PA18=INH.WCS.SEL
```

23-025J5-00
23-042J5-00
23-043J5-00

THIS DRAWING AND SPECIFICATIONS, AS AN UNPUBLISHED WORK, ARE THE PROPERTY OF DIGITAL EQUIPMENT CORPORATION AND SHALL NOT BE REPRODUCED OR COPIED OR USED IN WHOLE OR IN PART AS THE BASIS FOR THE MANUFACTURE OR SALE OF ITEMS WITHOUT WRITTEN PERMISSION. COPYRIGHT (C) 1981, DIGITAL EQUIPMENT CORPORATION.

REVISIONS		
CHK	CHANGE NO.	REV

digital	DRN: D.M.Hafner	DATE: 27-OCT-81	ENG. / DATE
	CHK'D.	DATE	BOARD LOCATION:
			SHEET 81 OF 16

TITLE: MEM. CTLR. ROM AND PAL LISTINGS

DSK:GLMC01.T2P[1106,1500] 27-OCT-81 18:22	NEXT HIGHER ASSEMBLY:	SIZE: D	CODE: GL
FIRST USED ON OPTION/MODEL: 11/730	B-DD-M8391-0-0	NUMBER: M8391-0-0	REV.: A

G.M. HAFNER, [1106,1500 XGLMC01.DPL, SCALE 2, "D" RELEASE BOX
G.M. HAFNER GLMC01.PLOT[1106,1500] 27-OCT-81 18:20

PART NUMBER: 23-044J5-00

DEVICE TYPE: PAL16L8

SCHEMATIC SHEET 8:D-CS-M8391-8-MCTA

LOCATION/DESCRIPTION: E84/ CONTROL PREFETCH

ASSIGNED PIN NUMBER:

1= CSR.19	8= LVA3	15= NC
2=/CPUG	9= ERR.SUM.CLK	16= CSR.2.CLK
3= OPEN.CONT.LATCH	10= GND	17= WR.CSR.1
4= PG.BND.PREF	11= NC	18=/OP.PREF.ADDR
5= PG.BND	12=/OP.ARY.ADDR	19=/PG.BOUND
6=/WR.CSR	13= CPU.CYCLE	20= VCC
7= LVA2	14=/CLR.UB.RDS	

EQUATIONS:

```
IF(VCC) OP.ARY.ADDR:=/OP.PREF.ADDR

IF(VCC) CLR.UB.RDS:=WR.CSR*LVA3*/LVA2

IF(VCC) /CSR.2.CLK:=/ERR.SUM.CLK*LVA2
                   +/ERR.SUM.CLK*/LVA3
                   +/ERR.SUM.CLK*/WR.CSR
                   +/WR.CSR*CPU.CYCLE
                   +CPU.CYCLE*/LVA3
                   +CPU.CYCLE*LVA2

IF(VCC)  /WR.CSR.1:=/WR.CSR
                   +/LVA2
                   +LVA3

IF(VCC) OP.PREF.ADDR:=/CSR.19*CPUG*OPEN.CONT.LATCH
                     +OP.PREF.ADDR*/OPEN.CONT.LATCH
                     +OP.PREF.ADDR*CPUG

IF(VCC) PG.BOUND:=OP.PREF.ADDR*PG.BND.PREF
                 +/OP.PREF.ADDR*PG.BND

IF(VCC) /CPU.CYCLE:=/CPU.CYCLE*/CPUG
                   +/CPUG*OPEN.CONT.LATCH
```

PART NUMBER: 23-061J5-00

DEVICE TYPE: PAL16L8

SCHEMATIC SHEET 8:D-CS-M8391-8-MCTF

LOCATION/DESCRIPTION: E61/ MCTF CSR CONTROL

ASSIGNED PIN NUMBER:

1=/ERR.ADDR.CLK.A	8=/CLR.UB.RDS	15=/UB.LRDS
2=/SERR	9= 2ND.MEM.CYC	16= NC
3=/ERR	10= GND	17= NC
4= INH.REP.CRD	11= L.ECC.DIS	18= LRDS
5= CPU.CYCLE	12= NC	19= NC
6= ERR.SUM.CLK	13= LCRD	20= VCC
7=/WR.CSR	14=/DAT.ERR	

EQUATIONS:

```
IF(VCC) UB.LRDS:=/SERR*ERR*ERR.ADDR.CLK.A*/CPU.CYCLE
                +/CLR.UB.RDS*UB.LRDS

IF(VCC) DAT.ERR:=/SERR*ERR*ERR.ADDR.CLK.A*CPU.CYCLE
                +ERR*ERR.ADDR.CLK.A*L.ECC.DIS*CPU.CYCLE
                +SERR*ERR*ERR.ADDR.CLK.A*/INH.REP.CRD*CPU.CYCLE
                +/CPU.CYCLE*/WR.CSR*DAT.ERR
                +/ERR.SUM.CLK*/WR.CSR*DAT.ERR
                +/WR.CSR*2ND.MEM.CYC*DAT.ERR

IF(VCC) /LRDS:=CPU.CYCLE*ERR.SUM.CLK*/2ND.MEM.CYC
              +WR.CSR
              +/LRDS*SERR
              +/LRDS*/ERR
              +/LRDS*/ERR.ADDR.CLK.A
              +/LRDS*/CPU.CYCLE

IF(VCC) /LCRD:=CPU.CYCLE*ERR.SUM.CLK*/2ND.MEM.CYC
              +WR.CSR
              +/LCRD*/SERR
              +/LCRD*/ERR
              +/LCRD*/ERR.ADDR.CLK.A
              +/LCRD*/CPU.CYCLE
              +/LCRD*INH.REP.CRD
```

PART NUMBER: 23-017K3-00

DEVICE TYPE: PAL16R4

SCHEMATIC SHEET 8:D-CS-M8391-8-MCTL

LOCATION/DESCRIPTION: E3-E7,E13-E15/ DATA ROTATOR & LATCH

ASSIGNED PIN NUMBER:

1= REG.CLK.H	8=/CYC1	15=/OA816
2=/IA800	9=/MDR.DATOUT.EN	16=/OA800
3=/IA000	10= GND	17=/OA000
4=/IA816	11=/DIR.WRBTT.EN	18= MC00
5=/IA824	12= MC24	19= MC00
6=/A0	13= MC16	20= VCC
7=/A1	14=/OA824	

EQUATIONS:

```
IF(MDR.DATOUT.EN) /MC24:= CYC1*/A1*/A0*/IA824
                        +/A1* A0*/IA800
                        + A1*/A0*/IA000
                        + A1* A0*/IA816
                       +/CYC1*/A1*/A0*/OA824

IF(MDR.DATOUT.EN) /MC16:=CYC1*/A1*/A0*/IA816
                       +CYC1*/A1* A0*/IA824
                        + A1*/A0*/IA800
                        + A1* A0*/IA000
                       +/CYC1*/A1*/OA816

OA824:= CYC1*/MDR.DATOUT.EN*/A1*/A0*MC24
      + CYC1*/MDR.DATOUT.EN*/A1* A0*MC16
      + CYC1*/MDR.DATOUT.EN* A1*/A0*MC00
      + CYC1*/MDR.DATOUT.EN* A1* A0*MC00
      +/CYC1*OA824

OA816:=CYC1*/MDR.DATOUT.EN*/A1*/A0*MC16
      +CYC1*/MDR.DATOUT.EN*/A1*A0*MC00
      +CYC1*/MDR.DATOUT.EN*A1*/A0*MC00
      +CYC1*/MDR.DATOUT.EN*A1*A0*MC24
      +/CYC1*OA816
      +CYC1*/A1*A0*/IA824*MDR.DATOUT.EN

OA800:=CYC1*/MDR.DATOUT.EN*/A1*/A0*MC00
      +CYC1*/MDR.DATOUT.EN*/A1*A0*MC00
      +CYC1*/MDR.DATOUT.EN*A1*/A0*MC24
      +CYC1*/MDR.DATOUT.EN*A1*A0*MC16
      +/CYC1*OA800
      +CYC1*MDR.DATOUT.EN*/A1*/A0*/IA816
      +CYC1*MDR.DATOUT.EN*A1*/A0*/IA824

OA000:=CYC1*/MDR.DATOUT.EN*/A1*/A0*MC00
      +CYC1*/MDR.DATOUT.EN*/A1*A0*MC24
      +CYC1*/MDR.DATOUT.EN*A1*/A0*MC16
      +CYC1*/MDR.DATOUT.EN*A1*A0*MC00
      +/CYC1*OA000
      +CYC1*MDR.DATOUT.EN*/A1*/A0*/IA000
      +CYC1*MDR.DATOUT.EN*A1*/A0*/IA816
      +CYC1*MDR.DATOUT.EN*A1*A0*/IA824

IF(MDR.DATOUT.EN) /MC00:=CYC1*/A1*/A0*/IA800
                        +CYC1*/A1*A0*/IA816
                        +CYC1*A1*/A0*/IA824
                        +A1*A0*/IA000
                        +/CYC1*/A1*/OA000
                        +/CYC1*A1*/A0*/OA000

IF(MDR.DATOUT.EN) /MC00:=CYC1*/A1*/A0*/IA800
                        +CYC1*/A1*A0*/IA000
                        +CYC1*A1*/A0*/IA816
                        +CYC1*A1*A0*/IA824
                        +/CYC1*/OA000
```

23-044J5-00
23-061J5-00
23-017K3-00

THIS DRAWING AND SPECIFICATIONS, AS AN UNPUBLISHED WORK OF DIGITAL EQUIPMENT CORPORATION, SHALL NOT BE REPRODUCED OR COPIED OR USED IN WHOLE OR IN PART AS THE BASIS FOR THE MANUFACTURE OR SALE OF ITEMS WITHOUT WRITTEN PERMISSION. COPYRIGHT © 1981, DIGITAL EQUIPMENT CORPORATION.

REVISIONS		
CHK	CHANGE NO.	REV

DRN: A.M.Hafner	DATE: 27-OCT-81	ENG.	DATE
CHK'D.	DATE	BOARD LOCATION:	
		SHEET 32 OF 16	

DSK:GL,MC02,T2P(106,1500)[27-OCT-81 18:22] NEXT HIGHER ASSEMBLY: B-DD-M8391-0-0

FIRST USED ON OPTION/MODEL: 11/730

TITLE: MEM. CTLR. ROM AND PAL LISTINGS

SIZE	CODE	NUMBER	REV.
D	GL	M8391-0-0	A

G.M. HAFNER, [106,1500]XGLMC02.DPL, SCALE 2.0 RELEASE BOM
G.M. HAFNER GLMC02.PLO[106,1500] 27-OCT-81 18:20

PART NUMBER: 23-018K3-00

DEVICE TYPE: PAL16R4

SCHEMATIC SHEET #:D-CS-M8391-0-MCTB

LOCATION/DESCRIPTION: E47,E50/ VAR (2 INPUT MUX)

ASSIGNED PIN NUMBER:

1= REG.CLK	8= A3	15= LVA2
2= A0	9= B3	16= LVA1
3= B0	10= GND	17= LVA0
4= A1	11= REG.OUT.EN.L	18= CONTROL
5= B1	12= CARRY3.OUT	19= CIN
6= A2	13= LOAD	20= VCC
7= B2	14= LVA3	

EQUATIONS:

```
IF(VCC) /CARRY3.OUT:=/LVA3
                    +/LVA2
                    +/LVA1
                    +/LVA0
                    +/CIN

/LVA3:=/LOAD=/CONTROL=/LVA3
      +LOAD=/CONTROL=/A3
      +LOAD=CONTROL=/B3
      +/LOAD=CONTROL=LVA3=LVA2=LVA1=LVA0=CIN
      +/LOAD=CONTROL=/LVA3=/LVA2
      +/LOAD=CONTROL=/LVA3=/LVA1
      +/LOAD=CONTROL=/LVA3=/LVA0
      +/LOAD=CONTROL=/LVA3=/CIN

/LVA2:=/LOAD=/CONTROL=/LVA2
      +LOAD=/CONTROL=/A2
      +LOAD=CONTROL=/B2
      +/LOAD=CONTROL=LVA2=LVA1=LVA0=CIN
      +/LOAD=CONTROL=/LVA2=/LVA1
      +/LOAD=CONTROL=/LVA2=/LVA0
      +/LOAD=CONTROL=/LVA2=/CIN

/LVA1:=/LOAD=/CONTROL=/LVA1
      +LOAD=/CONTROL=/A1
      +/LOAD=CONTROL=LVA1=LVA0=CIN
      +/LOAD=CONTROL=/LVA1=/LVA0
      +/LOAD=CONTROL=/LVA1=/CIN

/LVA0:=/LOAD=/CONTROL=/LVA0
      +LOAD=/CONTROL=/A0
      +LOAD=CONTROL=/B0
      +/LOAD=CONTROL=CIN=LVA0
      +/LOAD=CONTROL=/CIN=/LVA0
```

PART NUMBER: 23-019K3-00

DEVICE TYPE: PAL16R4

SCHEMATIC SHEET #:D-CS-M8391-0-MCTB

LOCATION/DESCRIPTION: E26,E70,E67/ VAR (2 INPUT MUX)

ASSIGNED PIN NUMBER:

1= REG.CLK	8= A3	15= LVA2
2= A0	9= B3	16= LVA1
3= B0	10= GND	17= LVA0
4= A1	11= REG.OUT.EN.L	18= CONTROL
5= B1	12= CARRY3.OUT	19= CIN
6= A2	13= LOAD	20= VCC
7= B2	14= LVA3	

EQUATIONS:

```
IF(VCC) /CARRY3.OUT:=/LVA3
                    +/LVA2
                    +/LVA1
                    +/CIN

/LVA3:=/LOAD=/CONTROL=/LVA3
      +LOAD=/CONTROL=/A3
      +LOAD=CONTROL=/B3
      +/LOAD=CONTROL=LVA3=LVA2=LVA1=CIN
      +/LOAD=CONTROL=/LVA3=/LVA2
      +/LOAD=CONTROL=/LVA3=/LVA1
      +/LOAD=CONTROL=/LVA3=/CIN

/LVA2:=/LOAD=/CONTROL=/LVA2
      +LOAD=/CONTROL=/A2
      +LOAD=CONTROL=/B2
      +/LOAD=CONTROL=LVA2=LVA1=CIN
      +/LOAD=CONTROL=/LVA2=/LVA1
      +/LOAD=CONTROL=/LVA2=/CIN

/LVA1:=/LOAD=/CONTROL=/LVA1
      +LOAD=/CONTROL=/A1
      +LOAD=CONTROL=/B1
      +/LOAD=CONTROL=LVA1=CIN
      +/LOAD=CONTROL=/LVA1=/CIN

/LVA0:=/LOAD=/LVA0
      +LOAD=/CONTROL=/A0
      +LOAD=CONTROL=/B0
```

PART NUMBER: 23-023K3-00

DEVICE TYPE: PAL16R4

SCHEMATIC SHEET #:D-CS-M8391-0-MCTE

LOCATION/DESCRIPTION: E106/ MCTE POWER UP & INIT

ASSIGNED PIN NUMBER:

1= REG.CLK	8= ISSTN	15=/TIMEOUT.A
2= DCLO	9=/REF.IN.PROG	16=/PWR.FL
3= 5V.PWR.UP	10= GND	17=/PWR.UP.FLP
4= OPEN.FUNC.LAT	11= REG.OUT.EN.L	18= INTR
5= ERROR	12= LISSTN	19=/PWRF.OR.REF
6= ALLOW.REF	13=/START.REF.CYC	20= VCC
7= BMSTN	14=/TIMEOUT	

EQUATIONS:

```
IF(VCC) PWRF.OR.REF:=START.REF.CYC
                    +PWR.FL

IF(VCC) /LISSTN:=/BMSTN=/INTR
                +/ISSTN=/LISSTN
                +ERROR

PWR.FL:=/PWR.UP.FLP
       +PWR.FL*DCLO
       +DCLO=OPEN.FUNC.LAT
       +DCLO=ALLOW.REF

PWR.UP.FLP:=5V.PWR.UP

TIMEOUT.A:=REF.IN.PROG

TIMEOUT:=TIMEOUT.A*/REF.IN.PROG
```

23-018K3-00
23-019K3-00
23-023K3-00

THIS DRAWING AND SPECIFICATIONS, AS AN UNPUBLISHED WORK, ARE THE PROPERTY OF DIGITAL EQUIPMENT CORPORATION AND SHALL NOT BE REPRODUCED OR COPIED OR USED IN WHOLE OR IN PART AS THE BASIS FOR THE MANUFACTURE OR SALE OF ITEMS WITHOUT WRITTEN PERMISSION. COPYRIGHT © 1981, DIGITAL EQUIPMENT CORPORATION.

REVISIONS		
CHK	CHANGE NO.	REV

DRN: A.M.Hofmann DATE: 27-OCT-81
CHK'D. DATE
ENG. DATE
BOARD LOCATION:
SHEET 81 OF 16
DSK:GLRC03.T2P[1106,1500]27-OCT-81 18:22
NEXT HIGHER ASSEMBLY: B-DD-M8391-0-0
FIRST USED ON OPTION/MODEL: 11/730

TITLE: MEM. CTLR. ROM AND PAL LISTINGS

SIZE	CODE	NUMBER	REV.
D	GL	M8391-0-0	A

SIZE D | CODE GL | NUMBER M8391-0-0 | REV. A

G.M. HOFMANN [1106,1500]GLRC03.DPL, SCALE 2, "D" RELEASE BOM
G.M. HOFMANN GLRC03.PLX[1106,1500] 27-OCT-81 18:29

PART NUMBER: 23-026K3-00

DEVICE TYPE: PAL16R4

SCHEMATIC SHEET #:D-CS-M8391-0-MCTF

LOCATION/DESCRIPTION: E60/ MCTF UNIBUS CSR 2

ASSIGNED PIN NUMBER:

```
 1= REG.CLK              8= VALID                15= LUB.RDS
 2=/CLR.ERR              9=/TBWE                 16= LUB.NXM
 3=/NXM                 10= GND                  17= LUB.TB.PAR.ERR
 4=/UB.RDS              11=/REG.OUT.EN           18=/TBP0
 5=/WR.NOT.VALID        12=/TB.PAR.ERR           19=/UB.ERR.SUM
 6= GEN.P0              13= PAR.A                20= VCC
 7= PROT.PAR            14= LWR.NOT.VALID
```

EQUATIONS:

```
IF[VCC] TB.PAR.ERR:=GEN.P0*PROT.PAR*/PAR.A
                   +GEN.P0*/PROT.PAR*PAR.A
                   +/GEN.P0*PROT.PAR*PAR.A
                   +/GEN.P0*/PROT.PAR*/PAR.A

/LWR.NOT.VALID :=LUB.NXM*/LWR.NOT.VALID
                +LUB.TB.PAR.ERR*/LWR.NOT.VALID
                +TB.PAR.ERR*/LWR.NOT.VALID
                +/WR.NOT.VALID*/LWR.NOT.VALID
                +CLR.ERR
                +LUB.RDS*/LWR.NOT.VALID

/LUB.RDS:=/UB.RDS
         +CLR.ERR
         +LUB.TB.PAR.ERR*/LUB.RDS
         +LUB.NXM*/LUB.RDS
         +LWR.NOT.VALID*/LUB.RDS

/LUB.NXM:=/NXM*/LUB.NXM*VALID
         +CLR.ERR
         +LUB.TB.PAR.ERR*/LUB.NXM
         +TB.PAR.ERR*/LUB.NXM
         +LUB.RDS*/LUB.NXM
         +LWR.NOT.VALID*/LUB.NXM
         +WR.NOT.VALID*/LUB.NXM

/LUB.TB.PAR.ERR:=/LUB.TB.PAR.ERR*/PAR.A*/GEN.P0*PROT.PAR
                +/LUB.TB.PAR.ERR*/PAR.A*GEN.P0*/PROT.PAR
                +/LUB.TB.PAR.ERR*PAR.A*/GEN.P0*/PROT.PAR
                +/LUB.TB.PAR.ERR*PAR.A*GEN.P0*PROT.PAR
                +CLR.ERR
                +LUB.RDS*/LUB.TB.PAR.ERR
                +LWR.NOT.VALID*/LUB.TB.PAR.ERR
                +LUB.NXM*/LUB.TB.PAR.ERR

IF[TBWE] TBP0:=/VALID*/GEN.P0*/PROT.PAR
               +VALID*/GEN.P0*PROT.PAR
               +VALID*GEN.P0*/PROT.PAR
               +/VALID*GEN.P0*PROT.PAR

IF[VCC] UB.ERR.SUM:=NXM
                   +/VALID
                   +WR.NOT.VALID
                   +GEN.P0*PROT.PAR*/PAR.A
                   +GEN.P0*/PROT.PAR*PAR.A
                   +/GEN.P0*PROT.PAR*PAR.A
                   +/GEN.P0*/PROT.PAR*/PAR.A

IF[VCC] /PAR.A:=/TBP0*/VALID
               +TBP0*VALID
```

PART NUMBER: 23-056K3-00

DEVICE TYPE: PAL16R4

SCHEMATIC SHEET #:D-CS-M8391-0-MCTE

LOCATION/DESCRIPTION: E91/ ARBITRATOR

ASSIGNED PIN NUMBER:

```
 1= REG.CLK              8= SET.LOCK             15=/R1
 2= LNPR                 9= CPUDR                16=/CPUG
 3= LSACK               10= GND                  17=/NPG
 4= LBBSY               11=/REG.OUT.EN           18= IBBSY
 5=/TIMEOUT             12= CLEAR.LOCK           19=/UB.ACTIVITY
 6= CPUR                13= LMSYN                20= VCC
 7=/CONT.FUNC.LAT       14=/LOCK
```

EQUATIONS:

```
LOCK:=LOCK*/CLEAR.LOCK
     +SET.LOCK*/CLEAR.LOCK

R1:=TIMEOUT*NPG
   +R1*NPG

NPG:=LNPR*/LSACK*/LOCK*/SET.LOCK
    +LNPR*/LSACK*LOCK*/CPUR*/CPUG
    +NPG*/LSACK*R1*/TIMEOUT
    +NPG*/LSACK*/R1

CPUG:=LOCK*/CONT.FUNC.LAT*CPUR*/CPUDR*/NPG*/LSACK*/LBBSY*/IBBSY
     +LOCK*/CONT.FUNC.LAT*CPUR*/CPUDR*IBBSY
     +/LOCK*/CONT.FUNC.LAT*CPUR*/CPUDR*/LMSYN
     +CPUG*/CLEAR.LOCK*/SET.LOCK*/CPUDR
     +CPUG*/CLEAR.LOCK*SET.LOCK*/CPUDR
     +CPUG*CLEAR.LOCK*/SET.LOCK*/CPUDR

IF[VCC] UB.ACTIVITY:=LNPR*/IBBSY*/LOCK
                    +LSACK*/IBBSY*/LOCK
                    +NPG*/IBBSY*/LOCK
                    +LBBSY*/IBBSY*/LOCK
```

PART NUMBER: 23-060K3-00

DEVICE TYPE: PAL16R4

SCHEMATIC SHEET #:D-CS-M8391-0-MCTF

LOCATION/DESCRIPTION: E68/ CSR 1B

ASSIGNED PIN NUMBER:

```
 1= REG.CLK              8=/ADDR.PH              15= ADP.REG.SEL
 2=/CLR.ERR              9=/2.MEM.CYC            16= UB.BUSY
 3=/UB.ACT              10= GND                  17= LVALID
 4= VALID               11=/REG.OUT.EN           18=/WR.NOT.VALID
 5=/UB.PHYS.ADDR.SEL    12=/P.ERR.SUM            19=/WR.CHK
 6=/UB.REG.SEL          13= SYS.ADRS.VIOL        20= VCC
 7= PAGE.BOUND          14= WR.XPG.ERR
```

EQUATIONS:

```
IF[VCC] P.ERR.SUM:=WR.XPG.ERR
                  +ADP.REG.SEL
                  +UB.BUSY
                  +LVALID

/WR.XPG.ERR:=CLR.ERR
            +/2.MEM.CYC
            +/PAGE.BOUND*/SYS.ADRS.VIOL
            +/SYS.ADRS.VIOL*/WR.CHK*/CLR.ERR
            +ADDR.PH*/SYS.ADRS.VIOL

/ADP.REG.SEL:=CLR.ERR
             +/UB.REG.SEL

/UB.BUSY:=CLR.ERR*/WR.CHK
         +/UB.ACT*/CLR.ERR*WR.CHK
         +/UB.ACT*/CLR.ERR*/WR.CHK
         +/UB.PHYS.ADDR.SEL*/CLR.ERR*WR.CHK
         +/UB.PHYS.ADDR.SEL*/CLR.ERR*/WR.CHK

/LVALID:=CLR.ERR
        +VALID
        +ADDR.PH

IF[VCC] WR.NOT.VALID:=2.MEM.CYC*/VALID*/ADDR.PH
                     +2.MEM.CYC*SYS.ADRS.VIOL
```

23-026K3-00
23-056K3-00
23-060K3-00

THIS DRAWING AND SPECIFICATIONS, HEREIN, ARE THE PROPERTY OF DIGITAL EQUIPMENT CORPORATION AND SHALL NOT BE REPRODUCED OR COPIED OR USED IN WHOLE OR IN PART AS THE BASIS FOR THE MANUFACTURE OR SALE OF ITEMS WITHOUT WRITTEN PERMISSION. COPYRIGHT © 1981, DIGITAL EQUIPMENT CORPORATION

REVISIONS		
CHK	CHANGE NO.	REV

digital | DRN. G M Hafner | DATE 27-OCT-81 | ENG. | DATE
CHK'D. | DATE | BOARD LOCATION: | SHEET 2? OF 16
DSK:GLMC04.T2P[1106,1500][27-OCT-81 18:22 | NEXT HIGHER ASSEMBLY: B-DD-M8391-0-0
FIRST USED ON OPTION/MODEL: 11/730
TITLE: MEM. CTLR. ROM AND PAL LISTINGS
SIZE D | CODE GL | NUMBER M8391-0-0 | REV. A

G.M. HAFNER, [1106,1500]GLMC04.DPL, SCALE 2, "D" RELEASE BOX
G.M. HAFNER GLMC04.PLO[1106,1500] 27-OCT-81 18:29

PART NUMBER: 23-005K4-00

DEVICE TYPE: PAL16R6

SCHEMATIC SHEET #:D-CS-M8391-0-MCT8

LOCATION/DESCRIPTION: E42/ MCT8 VAR & BIT COUNTER (B)

ASSIGNED PIN NUMBER:

1= REG.CLK	8= CONTROL	15= LA3
2= A0	9= LOAD	16= LA2
3= A1	10= GND	17= LA1
4= A2	11=/REG.OUT.EN	18= LA0
5= A3	12= SYS.ADRS.VIOL	19= CIN
6= A4	13= LA5	20= VCC
7= A5	14= LA4	

EQUATIONS:

```
IF(VCC) /SYS.ADRS.VIOL:=/LA4
                        +/LA3
                        +/LA2
                        +/LA1
                        +/LA0
                        +/CIN

/LA5:=LOAD=/CONTROL=/A5
     +/LOAD=/LA5

/LA4:=LOAD=/CONTROL=/A4
     +/LOAD=/CONTROL=/LA4
     +/LOAD=CONTROL=LA4=LA3=LA2=LA1=LA0=CIN
     +/LOAD=CONTROL=/LA0=/LA4
     +/LOAD=CONTROL=/LA1=/LA4
     +/LOAD=CONTROL=/LA2=/LA4
     +/LOAD=CONTROL=/LA3=/LA4
     +/LOAD=CONTROL=/CIN=/LA4

/LA3:=LOAD=/CONTROL=/A3
     +/LOAD=/CONTROL=/LA3
     +/LOAD=CONTROL=LA3=LA2=LA1=LA0=CIN
     +/LOAD=CONTROL=/LA0=/LA3
     +/LOAD=CONTROL=/LA1=/LA3
     +/LOAD=CONTROL=/LA2=/LA3
     +/LOAD=CONTROL=/CIN=/LA3

/LA2:=LOAD=/CONTROL=/A2
     +/LOAD=/CONTROL=/LA2
     +/LOAD=CONTROL=LA2=LA1=LA0=CIN
     +/LOAD=CONTROL=/LA0=/LA2
     +/LOAD=CONTROL=/LA1=/LA2
     +/LOAD=CONTROL=/CIN=/LA2

/LA1:=LOAD=/CONTROL=/A1
     +/LOAD=/CONTROL=/LA1
     +/LOAD=CONTROL=LA1=LA0=CIN
     +/LOAD=CONTROL=/LA0=/LA1
     +/LOAD=CONTROL=/CIN=/LA1

/LA0 :=LOAD=/CONTROL=/A0
     +/LOAD=/CONTROL=/LA0
     +/LOAD=CONTROL=LA0=CIN
     +/LOAD=CONTROL=/CIN=/LA0
```

PART NUMBER: 23-006K4-00

DEVICE TYPE: PAL16R6

SCHEMATIC SHEET #:D-CS-M8391-0-MCTK

LOCATION/DESCRIPTION: E72/ MCTK DATA ROTATOR CONTROL

ASSIGNED PIN NUMBER:

1= REG.CLK	8= LUBC0	15=/RS0
2= LVA1	9= BYTE.OFFSET	16=/RS1
3= LVA0	10= GND	17=/A0
4= CPU.CYCLE	11=/REG.OUT.EN	18=/A1
5= LDT1	12= F0	19= F1
6= LDT0	13=/ALIGN.LW	20= VCC
7= LUBC1	14=/2.MEM.CYC	

EQUATIONS:

```
/ALIGN.LW:=LDT1=LDT0=/LVA0=/LVA1

2.MEM.CYC:=CPU.CYCLE=LVA1=LDT1
          +CPU.CYCLE=/LVA1=LVA0=LDT1=LDT0
          +/CPU.CYCLE=/LUBC1=LVA1=BYTE.OFFSET
          +/CPU.CYCLE=LUBC1=LUBC0=LVA1=LVA0=BYTE.OFFSET
          +/CPU.CYCLE=LUBC1=/LUBC0=LVA1=BYTE.OFFSET
          +CPU.CYCLE=LVA1=LVA0=LDT0

RS0:=CPU.CYCLE=LDT0
     +/CPU.CYCLE=/LUBC1
     +/CPU.CYCLE=/LUBC0
     +F1
     +F0

RS1:=CPU.CYCLE=LDT1
     +F1
     +F0

A0:=CPU.CYCLE=LVA0=/F1=/F0
   +CPU.CYCLE=/F1=F0
   +/CPU.CYCLE=BYTE.OFFSET

A1:=CPU.CYCLE=LVA1=/F0=/F1
   +CPU.CYCLE=F1=/F0
   +/CPU.CYCLE=LVA1
```

PART NUMBER: 23-007K4-00

DEVICE TYPE: PAL16R6

SCHEMATIC SHEET #:D-CS-M8391-0-MCT8

LOCATION/DESCRIPTION: E28/ MCT8 VAR 6-BIT COUNTER(A)

ASSIGNED PIN NUMBER:

1= REG.CLK	8= CONTROL	15= LA3
2= A0	9= LOAD	16= LA2
3= A1	10= GND	17= LA1
4= A2	11= REG.OUT.EN.L	18= LA0
5= A3	12= CARRY4.OUT	19= CIN
6= A4	13= LA5	20= VCC
7= A5	14= LA4	

EQUATIONS:

```
IF(VCC) /CARRY4.OUT:=/LA4
                     +/LA3
                     +/LA2
                     +/LA1
                     +/LA0
                     +/CIN

/LA5:=LOAD=/CONTROL=/A5
     +/LOAD=/CONTROL=/LA5
     +/LOAD=CONTROL=LA5=LA4=LA3=LA2=LA1=LA0=CIN
     +/LOAD=CONTROL=/CARRY4.OUT=/LA5

/LA4:=LOAD=/CONTROL=/A4
     +/LOAD=/CONTROL=/LA4
     +/LOAD=CONTROL=LA4=LA3=LA2=LA1=LA0=CIN
     +/LOAD=CONTROL=/LA0=/LA4
     +/LOAD=CONTROL=/LA1=/LA4
     +/LOAD=CONTROL=/LA2=/LA4
     +/LOAD=CONTROL=/LA3=/LA4
     +/LOAD=CONTROL=/CIN=/LA4

/LA3:=LOAD=/CONTROL=/A3
     +/LOAD=/CONTROL=/LA3
     +/LOAD=CONTROL=LA3=LA2=LA1=LA0=CIN
     +/LOAD=CONTROL=/LA0=/LA3
     +/LOAD=CONTROL=/LA1=/LA3
     +/LOAD=CONTROL=/LA2=/LA3
     +/LOAD=CONTROL=/CIN=/LA3

/LA2:=LOAD=/CONTROL=/A2
     +/LOAD=/CONTROL=/LA2
     +/LOAD=CONTROL=LA2=LA1=LA0=CIN
     +/LOAD=CONTROL=/LA0=/LA2
     +/LOAD=CONTROL=/LA1=/LA2
     +/LOAD=CONTROL=/CIN=/LA2

/LA1:=LOAD=/CONTROL=/A1
     +/LOAD=/CONTROL=/LA1
     +/LOAD=CONTROL=LA1=LA0=CIN
     +/LOAD=CONTROL=/LA0=/LA1
     +/LOAD=CONTROL=/CIN=/LA1

/LA0:=LOAD=/CONTROL=/A0
     +/LOAD=/CONTROL=/LA0
     +/LOAD=CONTROL=LA0=CIN
     +/LOAD=CONTROL=/CIN=/LA0
```

23-005K4-00
23-006K4-00
23-007K4-00

THIS DRAWING AND SPECIFICATIONS, HEREIN, ARE THE PROPERTY OF DIGITAL EQUIPMENT CORPORATION AND SHALL NOT BE REPRODUCED OR COPIED OR USED IN WHOLE OR IN PART AS THE BASIS FOR THE MANUFACTURE OR SALE OF ITEMS WITHOUT WRITTEN PERMISSION. COPYRIGHT © 1981 DIGITAL EQUIPMENT CORPORATION

REVISIONS		
CHK	CHANGE NO.	REV

digital

DRN: M Mahner | DATE: 27-OCT-81 | ENG. | DATE

CHK'D. | DATE | BOARD LOCATION:

SHEET 20 OF 16

DSK:GL,MC05,T2P[1106,1500]27-OCT-81 18:23

FIRST USED ON OPTION/MODEL: 11/730

NEXT HIGHER ASSEMBLY: B-DD-M8391-0-0

TITLE: MEM. CTLR. ROM AND PAL LISTINGS

SIZE	CODE	NUMBER	REV.
D	GL	M8391-0-0	A

REV. A | NUMBER M8391-0-0 | CODE GL | SIZE D

G.M. MAHNER [1106,1500]SYS:MC05.DPL; SCALE 2.0- RELEASE BOM
G.M. MAHNER GL,MC05,PLOX[1106,1500] 27-OCT-81 18:29

PART NUMBER: 23-000K4-00

DEVICE TYPE: PAL16R6

SCHEMATIC SHEET #:D-CS-M8391-0-MCTB

LOCATION/DESCRIPTION: E83/ MCTB MISC CONTROL

ASSIGNED PIN NUMBER:

1= REG.CLK	8= SPF2	15= SEC.CYC
2= L.MME	9= LDT0	16=/UB.TB.SEL
3= CPU.CYCLE	10= GND	17=/ADDR.PH
4= SPF0	11=/REG.OUT.EN	18=/BG
5= OPEN.FUNC.LAT	12= BBSY	19= IBBSY
6=/TB.DATA.EN	13= IC0	20= VCC
7= SPF1	14= IC1	

EQUATIONS:

```
IF(VCC) /IBBSY:=/BBSY*/IBBSY
              +/BBSY*IC1
              +/BBSY*/IC0

BG:=SPF2*SPF1*SPF0

/IC1:=SPF2*/SPF1
     +/SPF2*/IC1
     +SPF2*SPF1*SPF0*/IC1

/IC0:=SPF2*/SPF1*/SPF0
     +/SPF2*/IC0
     +SPF2*SPF1*SPF0*/IC0
     +SPF2*SPF1*/SPF0*LDT0

ADDR.PH:=/L.MME*CPU.CYCLE*/TB.DATA.EN
       +/SPF2*/SPF1*SPF0
       +ADDR.PH*/OPEN.FUNC.LAT*/TB.DATA.EN

UB.TB.SEL:=/OPEN.FUNC.LAT*UB.TB.SEL
         +/SPF2*SPF1*SPF0

/SEC.CYC:=OPEN.FUNC.LAT
        +/SEC.CYC*SPF2
        +/SEC.CYC*SPF0
        +/SEC.CYC*/SPF1
        +SPF2*/SPF1*/SPF0
```

PART NUMBER: 23-010K4-00

DEVICE TYPE: PAL16R6

SCHEMATIC SHEET #:D-CS-M8391-0-MCTF

LOCATION/DESCRIPTION: E57/ MEMORY CSR 1A

ASSIGNED PIN NUMBER:

1= REG.CLK	8= BYT.OFFSET	15= L.ACC.REF
2=/CLR.ERR	9=/OP.ERR	16= L.TB.MISS
3=/ADDR.PH	10= GND	17= L.NXM
4= NXM	11=/REG.OUT.EN	18= ILL.UB.OPER
5=/TB.MISS	12=/ERR.SUM	19=/TB.PAR
6=/ACC.REF	13= L.TB.PAR	20= VCC
7=/MOD.REF	14= L.MOD.REF	

EQUATIONS:

```
IF(VCC) ERR.SUM:=L.TB.MISS
               +ILL.UB.OPER
               +L.TB.PAR
               +L.MOD.REF
               +L.ACC.REF
               +L.NXM

/L.TB.PAR:=CLR.ERR
          +/TB.PAR
          +ADDR.PH

/L.MOD.REF:=CLR.ERR
           +/MOD.REF
           +ADDR.PH

/L.ACC.REF:=CLR.ERR
           +/ACC.REF
           +ADDR.PH

/L.TB.MISS:=CLR.ERR
           +/TB.MISS=BYT.OFFSET
           +ADDR.PH

/L.NXM:=CLR.ERR
       +/NXM

/ILL.UB.OPER:=CLR.ERR
             +/OP.ERR
```

PART NUMBER: 23-003K5-00

DEVICE TYPE: PAL16R8

SCHEMATIC SHEET #:D-CS-M8391-0-MCTB

LOCATION/DESCRIPTION: E77/ MCTB PREFETCH ADDRESS REG/COUNT

ASSIGNED PIN NUMBER:

1= REG.CLK.	8= A0	15= LA6
2= A2	9= NC	16= LA5
3= A3	10= GND	17= LA4
4= A4	11= REG.OUT.EN.L	18= LA3
5= A5	12= PAGE.BOUND.PREF	19= LA2
6= A6	13= LA0	20= VCC
7= A7	14= LA7	

EQUATIONS:

```
/PAGE.BOUND.PREF:=/A0
                 +/A7
                 +/A6
                 +/A5
                 +/A4
                 +/A3
                 +/A2

/LA0:=A2*A3*A4*A5*A6*A7*A0
     +/A0*/A7
     +/A0*/A6
     +/A0*/A5
     +/A0*/A4
     +/A0*/A3
     +/A0*/A2

/LA7:=A2*A3*A4*A5*A6*A7
     +/A7*/A6
     +/A7*/A5
     +/A7*/A4
     +/A7*/A3
     +/A7*/A2

/LA6:=A2*A3*A4*A5*A6
     +/A6*/A5
     +/A6*/A4
     +/A6*/A3
     +/A6*/A2

/LA5:=A2*A3*A4*A5
     +/A5*/A4
     +/A5*/A3
     +/A5*/A2

/LA4:=A2*A3*A4
     +/A4*/A3
     +/A4*/A2

/LA3:=A2*A3
     +/A3*/A2

/LA2:=A2
```

23-000K4-00
23-010K4-00
23-003K5-00

THIS DRAWING AND SPECIFICATIONS, HEREIN, ARE THE PROPERTY OF DIGITAL EQUIPMENT CORPORATION AND SHALL NOT BE REPRODUCED OR COPIED OR USED IN WHOLE OR IN PART AS THE BASIS FOR THE MANUFACTURE OR SALE OF ITEMS WITHOUT WRITTEN PERMISSION. COPYRIGHT © 1981, DIGITAL EQUIPMENT CORPORATION

REVISIONS		
CHK	CHANGE NO.	REV

DRN: D.M.Hafner	DATE: 27-OCT-81	ENG.	DATE
CHK'D.	DATE	BOARD LOCATION: SHEET 86 OF 16	
OSK:GLMC86,T2P(1106,1500)27-OCT-81 10:23		NEXT HIGHER ASSEMBLY: B-DD-M8391-0-0	
FIRST USED ON OPTION/MODEL: 11/730			

TITLE: MEM. CTLR. ROM AND PAL LISTINGS

SIZE	CODE	NUMBER	REV.
D	GL	M8391-0-0	A

G.M. HAFNER, [1106,1500]GLMC86.DPL, SCALE 2, 'D' RELEASE BOX
G.M. HAFNER GLMC86.PLO[1106,1500] 27-OCT-81 10:29

HEX LOC	HEX DAT	BIN DAT	HEX LOC	HEX DAT	BIN DAT	HEX LOC	HEX DAT	BIN DAT	HEX LOC	HEX DAT	BIN DAT	HEX LOC	HEX DAT	BIN DAT	HEX LOC	HEX DAT	BIN DAT	HEX LOC	HEX DAT	BIN DAT	HEX LOC	HEX DAT	BIN DAT
000	1D	00011101	040	40	01000000	080	B7	10110111	0C0	C0	11000000	100	06	00000110	140	CE	11001110	180	EE	11101110	1C0	35	00110101
001	90	10010000	041	0C	00001100	081	E9	11101001	0C1	2E	00101110	101	A0	10100000	141	CE	11001110	181	F0	11110000	1C1	8D	10001101
002	0B	00001011	042	06	00000110	082	43	01000011	0C2	61	01100001	102	A1	10100001	142	48	01001000	182	AA	10101010	1C2	15	00010101
003	0B	00001011	043	BB	10111011	083	B5	10110101	0C3	B7	10110111	103	5C	01011100	143	47	01000111	183	81	10000001	1C3	C4	11000100
004	01	00000001	044	A0	10100000	084	BD	10111101	0C4	C0	11000000	104	29	00101001	144	53	01010011	184	10	00010000	1C4	C5	11000101
005	01	00000001	045	48	01001000	085	BC	10111100	0C5	C5	11000101	105	6D	01101101	145	9C	10011100	185	87	10000111	1C5	10	00010000
006	04	00000100	046	4E	01001110	086	84	10000100	0C6	C8	11001000	106	07	00000111	146	B2	10110010	186	87	10000111	1C6	C7	11000111
007	A4	10100100	047	10	00010000	087	85	10000101	0C7	06	00000110	107	6D	01101101	147	47	01000111	187	DE	11011110	1C7	C8	11001000
008	0B	00001011	048	22	00100010	088	42	01000010	0C8	E8	11101000	108	16	00010110	148	D1	11010001	188	88	10001000	1C8	10	00010000
009	8B	10001011	049	0C	00001100	089	8B	10001011	0C9	13	00010011	109	2D	00101101	149	D3	11010011	189	89	10001001	1C9	CA	11001010
00A	4D	01001101	04A	7E	01111110	08A	10	00010000	0CA	E8	11101000	10A	4C	01001100	14A	49	01001001	18A	F8	11111000	1CA	CD	11001101
00B	08	00001000	04B	4A	01001010	08B	C5	11000101	0CB	D4	11010100	10B	6E	01101110	14B	D2	11010010	18B	A8	10101000	1CB	CC	11001100
00C	28	00101000	04C	4D	01001101	08C	95	10010101	0CC	E7	11100111	10C	16	00010110	14C	B7	10110111	18C	DE	11011110	1CC	CD	11001101
00D	00	00000000	04D	23	00100011	08D	8D	10001101	0CD	CD	11001101	10D	2D	00101101	14D	B7	10110111	18D	EE	11101110	1CD	39	00111001
00E	0C	00001100	04E	4B	01001011	08E	C2	11000010	0CE	E7	11100111	10E	4C	01001100	14E	50	01010000	18E	F7	11110111	1CE	CF	11001111
00F	0D	00001101	04F	06	00000110	08F	C2	11000010	0CF	06	00000110	10F	6E	01101110	14F	51	01010001	18F	BF	10111111	1CF	4D	01001101
010	10	00010000	050	58	01011000	090	38	00111000	0D0	D0	11010000	110	A7	10100111	150	D5	11010101	190	81	10000001	1D0	88	10001000
011	C9	11001001	051	0C	00001100	091	99	10011001	0D1	55	01010101	111	11	00010001	151	D8	11011000	191	BF	10111111	1D1	43	01000011
012	1F	00011111	052	63	01100011	092	90	10010000	0D2	70	01110000	112	10	00010000	152	DE	11011110	192	C5	11000101	1D2	AD	10101101
013	0A	00001010	053	53	01010011	093	A3	10100011	0D3	B7	10110111	113	06	00000110	153	E2	11100010	193	A1	10100001	1D3	4B	01001011
014	24	00100100	054	93	10010011	094	F8	11111011	0D4	D0	11010000	114	14	00010100	154	D6	11010110	194	95	10010101	1D4	4E	01001110
015	1D	00011101	055	97	10010111	095	95	10010101	0D5	DF	11011111	115	15	00010101	155	5D	01011101	195	96	10010110	1D5	4F	01001111
016	1F	00011111	056	94	10010100	096	C2	11000010	0D6	71	01110001	116	15	00010101	156	ED	11101101	196	CD	11001101	1D6	D7	11010111
017	0C	00001100	057	E7	11100111	097	C2	11000010	0D7	9A	10011010	117	06	00000110	157	55	01010101	197	99	10011001	1D7	E3	11100011
018	1E	00011110	058	40	01000000	098	98	10011000	0D8	83	10000011	118	1D	00011101	158	5A	01011010	198	87	10000111	1D8	D9	11011001
019	04	00000100	059	A1	10100001	099	92	10010010	0D9	03	00000011	119	AA	10101010	159	E1	11100001	199	F3	11110011	1D9	DA	11011010
01A	18	00011000	05A	73	01110011	09A	06	00000110	0DA	88	10001000	11A	AA	10101010	15A	E0	11100000	19A	DD	11011101	1DA	DB	11011011
01B	1F	00011111	05B	73	01110011	09B	88	10001000	0DB	D4	11010100	11B	AD	10101101	15B	5C	01011100	19B	F5	11110101	1DB	DC	11011100
01C	10	00010000	05C	5D	01011101	09C	98	10011000	0DC	F2	11110010	11C	1E	00011110	15C	9D	10011101	19C	F8	11111000	1DC	DD	11011101
01D	2B	00101011	05D	5E	01011110	09D	79	01111001	0DD	A1	10100001	11D	22	00100010	15D	75	01110101	19D	9E	10011110	1DD	52	01010010
01E	20	00100000	05E	A1	10100001	09E	4C	01001100	0DE	DC	11011100	11E	7C	01111100	15E	D6	11010110	19E	FE	11111110	1DE	DF	11011111
01F	06	00000110	05F	A1	10100001	09F	9D	10011101	0DF	A1	10100001	11F	AB	10101011	15F	E4	11100100	19F	FD	11111101	1DF	58	01011000
020	10	00010000	060	60	01100000	0A0	A0	10100000	0E0	AA	10101010	120	7F	01111111	160	10	00010000	1A0	A1	10100001	1E0	59	01011001
021	BA	10111010	061	74	01110100	0A1	3C	00111100	0E1	44	01000100	121	AF	10101111	161	61	01100001	1A1	6D	01101101	1E1	E2	11100010
022	18	00011000	062	CE	11001110	0A2	4E	01001110	0E2	AA	10101010	122	AE	10101110	162	69	01101001	1A2	A3	10100011	1E2	E3	11100011
023	60	01100000	063	63	01100011	0A3	B7	10110111	0E3	A1	10100001	123	AF	10101111	163	C6	11000110	1A3	06	00000110	1E3	BC	10111100
024	18	00011000	064	6D	01101101	0A4	B7	10110111	0E4	E6	11100110	124	25	00100101	164	63	01100011	1A4	A5	10100101	1E4	64	01100100
025	10	00010000	065	6C	01101100	0A5	AD	10101101	0E5	B7	10110111	125	B0	10110000	165	6A	01101010	1A5	A6	10100110	1E5	E6	11100110
026	18	00011000	066	A4	10100100	0A6	B7	10110111	0E6	EE	11101110	126	24	00100100	166	6D	01101101	1A6	6D	01101101	1E6	C0	11000000
027	1F	00011111	067	A2	10100010	0A7	A5	10100101	0E7	EB	11101011	127	B0	10110000	167	D6	11010110	1A7	F7	11110111	1E7	08	00001000
028	E8	11101000	068	06	00000110	0A8	A8	10101000	0E8	2E	00101110	128	B1	10110001	168	C8	11001000	1A8	11	00010001	1E8	E9	11101001
029	CB	11001011	069	84	10000100	0A9	9F	10011111	0E9	81	10000001	129	41	01000001	169	E5	11100101	1A9	18	00011000	1E9	6F	01101111
02A	23	00100011	06A	73	01110011	0AA	8F	10001111	0EA	89	10001001	12A	15	00010101	16A	6A	01101010	1AA	15	00010101	1EA	E4	11100100
02B	10	00010000	06B	73	01110011	0AB	4A	01001010	0EB	F6	11110110	12B	B8	10111000	16B	10	00010000	1AB	AC	10101100	1EB	EC	11101100
02C	F0	11110000	06C	01	00000001	0AC	06	00000110	0EC	8A	10001010	12C	2B	00101011	16C	71	01110001	1AC	F7	11110111	1EC	D0	11010000
02D	45	01000101	06D	6F	01101111	0AD	3D	00111101	0ED	DF	11011111	12D	B9	10111001	16D	10	00010000	1AD	7F	01111111	1ED	55	01010101
02E	2E	00101110	06E	9E	10011110	0AE	06	00000110	0EE	EC	11101100	12E	31	00110001	16E	6E	01101110	1AE	21	00100001	1EE	EF	11101111
02F	82	10000010	06F	60	01100000	0AF	70	01110000	0EF	A1	10100001	12F	AB	10101011	16F	67	01100111	1AF	15	00010101	1EF	7B	01111011
030	36	00110110	070	C3	11000011	0B0	06	00000110	0F0	35	00110101	130	AA	10101010	170	70	01110000	1B0	28	00101000	1F0	F1	11110001
031	C3	11000011	071	9D	10011101	0B1	A8	10101000	0F1	55	01010101	131	D1	11010001	171	EA	11101010	1B1	B2	10110010	1F1	86	10000110
032	3A	00111010	072	D3	11010011	0B2	B2	10110010	0F2	A1	10100001	132	35	00110101	172	EB	11101011	1B2	B3	10110011	1F2	F3	11110011
033	3A	00111010	073	41	01000001	0B3	07	00000111	0F3	D7	11010111	133	C0	11000000	173	EA	11101010	1B3	B4	10110100	1F3	7F	01111111
034	3D	00111101	074	BE	10111110	0B4	91	10010001	0F4	A1	10100001	134	32	00110010	174	6E	01101110	1B4	B5	10110101	1F4	F5	11110101
035	35	00110101	075	A9	10101001	0B5	0D	00001101	0F5	9C	10011100	135	35	00110101	175	7C	01111100	1B5	B6	10110110	1F5	F6	11110110
036	8A	10001010	076	74	01110100	0B6	06	00000110	0F6	9B	10011011	136	5B	01011011	176	10	00010000	1B6	B7	10110111	1F6	E6	11100110
037	8A	10001010	077	75	01110101	0B7	B7	10110111	0F7	A1	10100001	137	3A	00111010	177	F4	11110100	1B7	2C	00101100	1F7	06	00000110
038	58	01011000	078	D3	11010011	0B8	B2	10110010	0F8	9D	10011101	138	C1	11000001	178	10	00010000	1B8	2D	00101101	1F8	98	10011000
039	C6	11000110	079	09	00001001	0B9	14	00010100	0F9	54	01010100	139	39	00111001	179	58	01011000	1B9	8E	10001110	1F9	00	00000000
03A	64	01100100	07A	D3	11010011	0BA	BC	10111100	0FA	A1	10100001	13A	3A	00111010	17A	80	10000000	1BA	B8	10111011	1FA	00	00000000
03B	12	00010010	07B	73	01110011	0BB	D8	11011000	0FB	CE	11001110	13B	06	00000110	17B	ED	11101101	1BB	61	01100001	1FB	00	00000000
03C	FB	11111011	07C	18	00011011	0BC	06	00000110	0FC	A1	10100001	13C	3C	00111100	17C	78	01111011	1BC	18	00011000	1FC	00	00000000
03D	3D	00111101	07D	7F	01111111	0BD	B4	10110100	0FD	FF	11111111	13D	93	10010011	17D	64	01100100	1BD	BF	10111111	1FD	00	00000000
03E	8A	10001010	07E	1B	00011011	0BE	BC	10111100	0FE	A1	10100001	13E	06	00000110	17E	4F	01001111	1BE	BF	10111111	1FE	00	00000000
03F	8A	10001010	07F	26	00100110	0BF	BD	10111101	0FF	32	00110010	13F	D0	11010000	17F	E6	11100110	1BF	30	00110000	1FF	00	00000000

PART NUMBER: 23-032D2-00
DEVICE TYPE:512 X 8
SCHEMATIC SHEET #:D-CS-M8391-0-MCTM
LOCATION/DESCRIPTION: E99 / UCODE<00-07>

LEFT COLUMN OF BIN DATA IS MSB
BINARY DATA "1" = HIGH
BINARY DATA "0" = LOW

THIS DRAWING AND SPECIFICATIONS, AS AN UNPUBLISHED WORK, ARE THE PROPERTY OF DIGITAL EQUIPMENT CORPORATION AND SHALL NOT BE REPRODUCED OR COPIED OR USED IN WHOLE OR IN PART AS THE BASIS FOR THE MANUFACTURE OR SALE OF ITEMS WITHOUT WRITTEN PERMISSION. COPYRIGHT © 1981, DIGITAL EQUIPMENT CORPORATION.

REVISIONS		
CHK	CHANGE NO.	REV

digital

DRN: D.McHafner | DATE: 27-OCT-81 | ENG. | DATE | TITLE: MEM. CTLR. ROM AND PAL LISTINGS

CHK'D. | DATE | BOARD LOCATION: SHEET 02 OF 16

DSK:GLMC07.T2P[1106,1500]27-OCT-81 18:23 | NEXT HIGHER ASSEMBLY: B-DD-M8391-0-0 | FIRST USED ON OPTION/MODEL: 11/730

SIZE	CODE	NUMBER	REV.
D	GL	M8391-0-0	A

G.M. HAFNER, [1106,1500]GLMC07.DPL, SCALE 2, "D" RELEASE BOX
G.M. HAFNER GLMC07.PLO[1106,1500] 27-OCT-81 18:23

HEX LOC	HEX DAT	BIN DAT
000	00	00000000
001	00	00000000
002	00	00000000
003	00	00000000
004	00	00000000
005	00	00000000
006	00	00000000
007	01	00000001
008	00	00000000
009	60	01100000
00A	01	00000001
00B	01	00000001
00C	01	00000001
00D	01	00000001
00E	01	00000001
00F	01	00000001
010	01	00000001
011	01	00000001
012	01	00000001
013	60	01100000
014	01	00000001
015	01	00000001
016	01	00000001
017	01	00000001
018	01	00000001
019	60	01100000
01A	01	00000001
01B	01	00000001
01C	50	01010000
01D	01	00000001
01E	01	00000001
01F	01	00000001
020	07	00000111
021	01	00000001
022	01	00000001
023	01	00000001
024	01	00000001
025	01	00000001
026	01	00000001
027	01	00000001
028	01	00000001
029	01	00000001
02A	01	00000001
02B	07	00000111
02C	01	00000001
02D	00	00000000
02E	01	00000001
02F	00	00000000
030	00	00000000
031	01	00000001
032	01	00000001
033	01	00000001
034	01	00000001
035	01	00000001
036	01	00000001
037	00	00000000
038	01	00000001
039	01	00000001
03A	00	00000000
03B	01	00000001
03C	01	00000001
03D	71	01110001
03E	5C	01011100
03F	01	00000001

HEX LOC	HEX DAT	BIN DAT
040	01	00000001
041	01	00000001
042	01	00000001
043	81	10000001
044	00	00000000
045	01	00000001
046	01	00000001
047	01	00000001
048	07	00000111
049	01	00000001
04A	01	00000001
04B	01	00000001
04C	01	00000001
04D	01	00000001
04E	01	00000001
04F	21	00100001
050	71	01110001
051	31	00110001
052	60	01100000
053	01	00000001
054	01	00000001
055	01	00000001
056	81	10000001
057	01	00000001
058	01	00000001
059	00	00000000
05A	01	00000001
05B	01	00000001
05C	07	00000111
05D	01	00000001
05E	00	00000000
05F	01	00000001
060	00	00000000
061	00	00000000
062	01	00000001
063	00	00000000
064	40	01000000
065	50	01010000
066	0E	00001110
067	61	01100001
068	01	00000001
069	00	00000000
06A	01	00000001
06B	01	00000001
06C	00	00000000
06D	00	00000000
06E	00	00000000
06F	01	00000001
070	00	00000000
071	01	00000001
072	00	00000000
073	00	00000000
074	00	00000000
075	01	00000001
076	81	10000001
077	81	10000001
078	80	10000000
079	61	01100001
07A	61	01100001
07B	00	00000000
07C	11	00010001
07D	01	00000001
07E	01	00000001
07F	01	00000001

HEX LOC	HEX DAT	BIN DAT
080	60	01100000
081	00	00000000
082	01	00000001
083	07	00000111
084	01	00000001
085	81	10000001
086	00	00000000
087	00	00000000
088	01	00000001
089	00	00000000
08A	01	00000001
08B	01	00000001
08C	01	00000001
08D	01	00000001
08E	01	00000001
08F	81	10000001
090	07	00000111
091	11	00010001
092	00	00000000
093	21	00100001
094	00	00000000
095	11	00010001
096	01	00000001
097	20	00100000
098	E0	11100000
099	81	10000001
09A	01	00000001
09B	07	00000111
09C	E0	11100000
09D	81	10000001
09E	81	10000001
09F	00	00000000
0A0	01	00000001
0A1	01	00000001
0A2	01	00000001
0A3	00	00000000
0A4	01	00000001
0A5	01	00000001
0A6	01	00000001
0A7	81	10000001
0A8	11	00010001
0A9	00	00000000
0AA	21	00100001
0AB	01	00000001
0AC	01	00000001
0AD	01	00000001
0AE	01	00000001
0AF	01	00000001
0B0	21	00100001
0B1	81	10000001
0B2	00	00000000
0B3	00	00000000
0B4	01	00000001
0B5	81	10000001
0B6	01	00000001
0B7	01	00000001
0B8	0F	00001111
0B9	00	00000000
0BA	80	10000000
0BB	00	00000000
0BC	01	00000001
0BD	81	10000001
0BE	01	00000001
0BF	01	00000001

HEX LOC	HEX DAT	BIN DAT
0C0	01	00000001
0C1	00	00000000
0C2	00	00000000
0C3	71	01110001
0C4	00	00000000
0C5	51	01010001
0C6	71	01110001
0C7	01	00000001
0C8	01	00000001
0C9	01	00000001
0CA	61	01100001
0CB	03	00000011
0CC	01	00000001
0CD	01	00000001
0CE	00	00000000
0CF	01	00000001
0D0	01	00000001
0D1	01	00000001
0D2	01	00000001
0D3	81	10000001
0D4	01	00000001
0D5	71	01110001
0D6	00	00000000
0D7	01	00000001
0D8	01	00000001
0D9	11	00010001
0DA	01	00000001
0DB	31	00110001
0DC	01	00000001
0DD	01	00000001
0DE	01	00000001
0DF	60	01100000
0E0	01	00000001
0E1	66	01100110
0E2	61	01100001
0E3	01	00000001
0E4	01	00000001
0E5	01	00000001
0E6	01	00000001
0E7	01	00000001
0E8	00	00000000
0E9	01	00000001
0EA	71	01110001
0EB	61	01100001
0EC	00	00000000
0ED	11	00010001
0EE	71	01110001
0EF	01	00000001
0F0	00	00000000
0F1	06	00000110
0F2	00	00000000
0F3	60	01100000
0F4	00	00000000
0F5	06	00000110
0F6	00	00000000
0F7	60	01100000
0F8	00	00000000
0F9	01	00000001
0FA	00	00000000
0FB	01	00000001
0FC	38	00111000
0FD	00	00000000
0FE	01	00000001
0FF	00	00000000

HEX LOC	HEX DAT	BIN DAT
100	00	00000000
101	00	00000000
102	60	01100000
103	00	00000000
104	01	00000001
105	00	00000000
106	38	00111000
107	01	00000001
108	00	00000000
109	01	00000001
10A	01	00000001
10B	00	00000000
10C	50	01010000
10D	00	00000000
10E	11	00010001
10F	00	00000000
110	00	00000000
111	10	00010000
112	01	00000001
113	01	00000001
114	40	01000000
115	81	10000001
116	11	00010001
117	00	00000000
118	00	00000000
119	80	10000000
11A	00	00000000
11B	60	01100000
11C	00	00000000
11D	01	00000001
11E	01	00000001
11F	01	00000001
120	00	00000000
121	10	00010000
122	00	00000000
123	01	00000001
124	01	00000001
125	81	10000001
126	03	00000011
127	00	00000000
128	01	00000001
129	21	00100001
12A	00	00000000
12B	60	01100000
12C	00	00000000
12D	81	10000001
12E	11	00010001
12F	60	01100000
130	00	00000000
131	01	00000001
132	70	01110000
133	01	00000001
134	01	00000001
135	01	00000001
136	00	00000000
137	01	00000001
138	00	00000000
139	20	00100000
13A	70	01110000
13B	60	01100000
13C	00	00000000
13D	81	10000001
13E	01	00000001
13F	60	01100000

HEX LOC	HEX DAT	BIN DAT
140	60	01100000
141	50	01010000
142	00	00000000
143	00	00000000
144	00	00000000
145	50	01010000
146	01	00000001
147	00	00000000
148	0E	00001110
149	00	00000000
14A	00	00000000
14B	01	00000001
14C	00	00000000
14D	0E	00001110
14E	01	00000001
14F	00	00000000
150	20	00100000
151	00	00000000
152	21	00100001
153	00	00000000
154	07	00000111
155	01	00000001
156	01	00000001
157	60	01100000
158	10	00010000
159	00	00000000
15A	4E	01001110
15B	00	00000000
15C	00	00000000
15D	06	00000110
15E	01	00000001
15F	70	01110000
160	10	00010000
161	06	00000110
162	01	00000001
163	80	10000000
164	00	00000000
165	00	00000000
166	01	00000001
167	70	01110000
168	01	00000001
169	01	00000001
16A	5C	01011100
16B	00	00000000
16C	00	00000000
16D	10	00010000
16E	00	00000000
16F	00	00000000
170	01	00000001
171	01	00000001
172	5C	01011100
173	00	00000000
174	01	00000001
175	00	00000000
176	01	00000001
177	07	00000111
178	10	00010000
179	10	00010000
17A	01	00000001
17B	01	00000001
17C	00	00000000
17D	80	10000000
17E	00	00000000
17F	00	00000000

HEX LOC	HEX DAT	BIN DAT
180	01	00000001
181	81	10000001
182	60	01100000
183	81	10000001
184	00	00000000
185	00	00000000
186	00	00000000
187	00	00000000
188	10	00010000
189	10	00010000
18A	01	00000001
18B	01	00000001
18C	81	10000001
18D	00	00000000
18E	10	00010000
18F	00	00000000
190	00	00000000
191	00	00000000
192	60	01100000
193	81	10000001
194	00	00000000
195	00	00000000
196	14	00010100
197	00	00000000
198	01	00000001
199	01	00000001
19A	06	00000110
19B	00	00000000
19C	0C	00001100
19D	01	00000001
19E	14	00010100
19F	00	00000000
1A0	00	00000000
1A1	00	00000000
1A2	00	00000000
1A3	00	00000000
1A4	00	00000000
1A5	00	00000000
1A6	00	00000000
1A7	70	01110000
1A8	00	00000000
1A9	01	00000001
1AA	01	00000001
1AB	01	00000001
1AC	0C	00001100
1AD	00	00000000
1AE	14	00010100
1AF	00	00000000
1B0	00	00000000
1B1	80	10000000
1B2	00	00000000
1B3	00	00000000
1B4	00	00000000
1B5	01	00000001
1B6	14	00010100
1B7	06	00000110
1B8	00	00000000
1B9	06	00000110
1BA	00	00000000
1BB	70	01110000
1BC	00	00000000
1BD	00	00000000
1BE	14	00010100
1BF	70	01110000

HEX LOC	HEX DAT	BIN DAT
1C0	02	00000010
1C1	02	00000010
1C2	5C	01011100
1C3	00	00000000
1C4	01	00000001
1C5	38	00111000
1C6	01	00000001
1C7	00	00000000
1C8	02	00000010
1C9	02	00000010
1CA	5C	01011100
1CB	00	00000000
1CC	02	00000010
1CD	02	00000010
1CE	01	00000001
1CF	01	00000001
1D0	06	00000110
1D1	50	01010000
1D2	00	00000000
1D3	00	00000000
1D4	00	00000000
1D5	00	00000000
1D6	01	00000001
1D7	00	00000000
1D8	80	10000000
1D9	80	10000000
1DA	60	01100000
1DB	80	10000000
1DC	00	00000000
1DD	80	10000000
1DE	01	00000001
1DF	00	00000000
1E0	00	00000000
1E1	00	00000000
1E2	00	00000000
1E3	00	00000000
1E4	80	10000000
1E5	80	10000000
1E6	01	00000001
1E7	00	00000000
1E8	14	00010100
1E9	86	10000110
1EA	00	00000000
1EB	66	01100110
1EC	00	00000000
1ED	80	10000000
1EE	01	00000001
1EF	60	01100000
1F0	10	00010000
1F1	10	00010000
1F2	20	00100000
1F3	00	00000000
1F4	39	00111001
1F5	00	00000000
1F6	01	00000001
1F7	00	00000000
1F8	1A	00011010
1F9	7E	01111110
1FA	00	00000000
1FB	00	00000000
1FC	00	00000000
1FD	00	00000000
1FE	10	00010000
1FF	00	00000000

PART NUMBER: 23-033D2-00
DEVICE TYPE:512 X 8
SCHEMATIC SHEET #:D-CS-M8391-0-MCTM
LOCATION/DESCRIPTION: E112 / UCODE<08:15>

LEFT COLUMN OF BIN DATA IS MSB
BINARY DATA "1" = HIGH
BINARY DATA "0" = LOW

THIS DRAWING AND SPECIFICATIONS, HEREIN, ARE THE PROPERTY OF DIGITAL EQUIPMENT CORPORATION AND SHALL NOT BE REPRODUCED OR COPIED OR USED IN WHOLE OR IN PART AS THE BASIS FOR THE MANUFACTURE OR SALE OF ITEMS WITHOUT WRITTEN PERMISSION. COPYRIGHT © 1981, DIGITAL EQUIPMENT CORPORATION

REVISIONS | CHK | CHANGE NO. | REV

digital | DRN. D M Hafner | DATE 27-OCT-81 | CHK'D. | DATE | ENG. | DATE
BOARD LOCATION: SHEET 08 OF 16
DSK:GLMC08.T2P[1106,1500][27-OCT-81 18:24 | NEXT HIGHER ASSEMBLY: B-DD-M8391-0-0
FIRST USED ON OPTION/MODEL: 11/730

TITLE: MEM. CTLR. ROM AND PAL LISTINGS
SIZE D | CODE GL | NUMBER M8391-0-0 | REV. A

HEX LOC	HEX DAT	BIN DAT
000	00	00000000
001	00	00000000
002	00	00000000
003	00	00000000
004	00	00000000
005	00	00000000
006	00	00000000
007	C4	11000100
008	A4	10100100
009	95	10010101
00A	94	10010100
00B	94	10010100
00C	84	10000100
00D	94	10010100
00E	95	10010101
00F	94	10010100
010	94	10010100
011	94	10010100
012	94	10010100
013	94	10010100
014	94	10010100
015	D4	11010100
016	85	10000101
017	94	10010100
018	94	10010100
019	94	10010100
01A	94	10010100
01B	85	10000101
01C	97	10010111
01D	94	10010100
01E	94	10010100
01F	94	10010100
020	94	10010100
021	94	10010100
022	96	10010110
023	94	10010100
024	94	10010100
025	94	10010100
026	84	10000100
027	94	10010100
028	94	10010100
029	94	10010100
02A	94	10010100
02B	94	10010100
02C	94	10010100
02D	94	10010100
02E	94	10010100
02F	94	10010100
030	94	10010100
031	94	10010100
032	1C	00011100
033	9C	10011100
034	9C	10011100
035	1C	00011100
036	9C	10011100
037	9C	10011100
038	5C	01011100
039	5C	01011100
03A	9C	10011100
03B	5C	01011100
03C	5C	01011100
03D	94	10010100
03E	9C	10011100
03F	9C	10011100

HEX LOC	HEX DAT	BIN DAT
040	9D	10011101
041	9C	10011100
042	9C	10011100
043	9E	10011110
044	DC	11011100
045	DC	11011100
046	94	10010100
047	94	10010100
048	94	10010100
049	94	10010100
04A	94	10010100
04B	94	10010100
04C	94	10010100
04D	94	10010100
04E	94	10010100
04F	94	10010100
050	94	10010100
051	94	10010100
052	94	10010100
053	94	10010100
054	94	10010100
055	94	10010100
056	9E	10011110
057	94	10010100
058	94	10010100
059	94	10010100
05A	94	10010100
05B	94	10010100
05C	94	10010100
05D	94	10010100
05E	94	10010100
05F	94	10010100
060	94	10010100
061	87	10000111
062	94	10010100
063	87	10000111
064	84	10000100
065	84	10000100
066	94	10010100
067	94	10010100
068	94	10010100
069	94	10010100
06A	94	10010100
06B	14	00010100
06C	A4	10100100
06D	9C	10011100
06E	94	10010100
06F	94	10010100
070	94	10010100
071	94	10010100
072	94	10010100
073	94	10010100
074	94	10010100
075	94	10010100
076	94	10010100
077	94	10010100
078	94	10010100
079	94	10010100
07A	94	10010100
07B	94	10010100
07C	94	10010100
07D	94	10010100
07E	94	10010100
07F	94	10010100

HEX LOC	HEX DAT	BIN DAT
080	94	10010100
081	94	10010100
082	85	10000101
083	94	10010100
084	94	10010100
085	95	10010101
086	94	10010100
087	94	10010100
088	94	10010100
089	94	10010100
08A	85	10000101
08B	94	10010100
08C	94	10010100
08D	94	10010100
08E	94	10010100
08F	94	10010100
090	94	10010100
091	94	10010100
092	94	10010100
093	94	10010100
094	94	10010100
095	94	10010100
096	94	10010100
097	96	10010110
098	94	10010100
099	95	10010101
09A	94	10010100
09B	94	10010100
09C	94	10010100
09D	95	10010101
09E	94	10010100
09F	94	10010100
0A0	94	10010100
0A1	94	10010100
0A2	94	10010100
0A3	94	10010100
0A4	94	10010100
0A5	94	10010100
0A6	94	10010100
0A7	95	10010101
0A8	9C	10011100
0A9	94	10010100
0AA	94	10010100
0AB	94	10010100
0AC	94	10010100
0AD	94	10010100
0AE	94	10010100
0AF	94	10010100
0B0	94	10010100
0B1	95	10010101
0B2	94	10010100
0B3	94	10010100
0B4	94	10010100
0B5	95	10010101
0B6	94	10010100
0B7	94	10010100
0B8	94	10010100
0B9	A7	10100111
0BA	97	10010111
0BB	DC	11011100
0BC	94	10010100
0BD	95	10010101
0BE	94	10010100
0BF	9C	10011100

HEX LOC	HEX DAT	BIN DAT
0C0	94	10010100
0C1	A4	10100100
0C2	94	10010100
0C3	54	01010100
0C4	A4	10100100
0C5	9C	10011100
0C6	14	00010100
0C7	9C	10011100
0C8	9C	10011100
0C9	94	10010100
0CA	9C	10011100
0CB	9C	10011100
0CC	9C	10011100
0CD	9C	10011100
0CE	DC	11011100
0CF	94	10010100
0D0	94	10010100
0D1	DC	11011100
0D2	94	10010100
0D3	95	10010101
0D4	94	10010100
0D5	A4	10100100
0D6	DC	11011100
0D7	84	10000100
0D8	94	10010100
0D9	94	10010100
0DA	94	10010100
0DB	94	10010100
0DC	94	10010100
0DD	94	10010100
0DE	94	10010100
0DF	94	10010100
0E0	94	10010100
0E1	9C	10011100
0E2	94	10010100
0E3	9D	10011101
0E4	94	10010100
0E5	94	10010100
0E6	94	10010100
0E7	9D	10011101
0E8	A4	10100100
0E9	94	10010100
0EA	94	10010100
0EB	94	10010100
0EC	A4	10100100
0ED	94	10010100
0EE	94	10010100
0EF	94	10010100
0F0	94	10010100
0F1	94	10010100
0F2	94	10010100
0F3	95	10010101
0F4	94	10010100
0F5	94	10010100
0F6	94	10010100
0F7	95	10010101
0F8	94	10010100
0F9	94	10010100
0FA	94	10010100
0FB	DC	11011100
0FC	84	10000100
0FD	94	10010100
0FE	94	10010100
0FF	BC	10111100

HEX LOC	HEX DAT	BIN DAT
100	94	10010100
101	84	10000100
102	94	10010100
103	94	10010100
104	94	10010100
105	94	10010100
106	D4	11010100
107	94	10010100
108	94	10010100
109	94	10010100
10A	94	10010100
10B	94	10010100
10C	94	10010100
10D	94	10010100
10E	DC	11011100
10F	9C	10011100
110	94	10010100
111	94	10010100
112	94	10010100
113	96	10010110
114	84	10000100
115	94	10010100
116	94	10010100
117	95	10010101
118	86	10000110
119	94	10010100
11A	94	10010100
11B	94	10010100
11C	94	10010100
11D	94	10010100
11E	DF	11011111
11F	94	10010100
120	94	10010100
121	94	10010100
122	84	10000100
123	94	10010100
124	94	10010100
125	94	10010100
126	94	10010100
127	94	10010100
128	84	10000100
129	94	10010100
12A	84	10000100
12B	94	10010100
12C	94	10010100
12D	94	10010100
12E	9C	10011100
12F	94	10010100
130	BC	10111100
131	94	10010100
132	94	10010100
133	94	10010100
134	D4	11010100
135	94	10010100
136	DF	11011111
137	94	10010100
138	A4	10100100
139	96	10010110
13A	9C	10011100
13B	94	10010100
13C	94	10010100
13D	94	10010100
13E	DC	11011100
13F	94	10010100

HEX LOC	HEX DAT	BIN DAT
140	94	10010100
141	94	10010100
142	96	10010110
143	BC	10111100
144	94	10010100
145	97	10010111
146	94	10010100
147	A7	10100111
148	94	10010100
149	BC	10111100
14A	94	10010100
14B	84	10000100
14C	E4	11100100
14D	E7	11100111
14E	94	10010100
14F	A4	10100100
150	94	10010100
151	BC	10111100
152	94	10010100
153	BC	10111100
154	94	10010100
155	94	10010100
156	D4	11010100
157	94	10010100
158	D4	11010100
159	94	10010100
15A	D4	11010100
15B	94	10010100
15C	94	10010100
15D	94	10010100
15E	54	01010100
15F	94	10010100
160	94	10010100
161	94	10010100
162	94	10010100
163	9F	10011111
164	94	10010100
165	BC	10111100
166	9C	10011100
167	9C	10011100
168	9C	10011100
169	9C	10011100
16A	9C	10011100
16B	9C	10011100
16C	84	10000100
16D	94	10010100
16E	DC	11011100
16F	94	10010100
170	9C	10011100
171	9C	10011100
172	9C	10011100
173	9C	10011100
174	9C	10011100
175	9C	10011100
176	D4	11010100
177	94	10010100
178	9C	10011100
179	9C	10011100
17A	9C	10011100
17B	9C	10011100
17C	94	10010100
17D	95	10010101
17E	D4	11010100
17F	94	10010100

HEX LOC	HEX DAT	BIN DAT
180	94	10010100
181	95	10010101
182	94	10010100
183	95	10010101
184	94	10010100
185	94	10010100
186	D4	11010100
187	94	10010100
188	9C	10011100
189	9C	10011100
18A	9C	10011100
18B	9C	10011100
18C	9F	10011111
18D	94	10010100
18E	9C	10011100
18F	94	10010100
190	94	10010100
191	94	10010100
192	94	10010100
193	95	10010101
194	9C	10011100
195	9C	10011100
196	9C	10011100
197	BC	10111100
198	94	10010100
199	94	10010100
19A	94	10010100
19B	94	10010100
19C	DC	11011100
19D	9C	10011100
19E	9C	10011100
19F	94	10010100
1A0	94	10010100
1A1	84	10000100
1A2	84	10000100
1A3	84	10000100
1A4	9C	10011100
1A5	9C	10011100
1A6	84	10000100
1A7	95	10010101
1A8	96	10010110
1A9	14	00010100
1AA	94	10010100
1AB	94	10010100
1AC	DC	11011100
1AD	DC	11011100
1AE	9C	10011100
1AF	94	10010100
1B0	A4	10100100
1B1	95	10010101
1B2	94	10010100
1B3	94	10010100
1B4	94	10010100
1B5	94	10010100
1B6	DC	11011100
1B7	94	10010100
1B8	94	10010100
1B9	94	10010100
1BA	94	10010100
1BB	94	10010100
1BC	94	10010100
1BD	A4	10100100
1BE	9C	10011100
1BF	94	10010100

HEX LOC	HEX DAT	BIN DAT
1C0	9C	10011100
1C1	9C	10011100
1C2	9C	10011100
1C3	9C	10011100
1C4	94	10010100
1C5	94	10010100
1C6	DC	11011100
1C7	94	10010100
1C8	9C	10011100
1C9	9C	10011100
1CA	9C	10011100
1CB	9C	10011100
1CC	94	10010100
1CD	94	10010100
1CE	DC	11011100
1CF	84	10000100
1D0	94	10010100
1D1	94	10010100
1D2	94	10010100
1D3	9C	10011100
1D4	94	10010100
1D5	94	10010100
1D6	9C	10011100
1D7	94	10010100
1D8	94	10010100
1D9	95	10010101
1DA	94	10010100
1DB	95	10010101
1DC	94	10010100
1DD	95	10010101
1DE	DC	11011100
1DF	94	10010100
1E0	BC	10111100
1E1	94	10010100
1E2	85	10000101
1E3	94	10010100
1E4	94	10010100
1E5	95	10010101
1E6	DC	11011100
1E7	94	10010100
1E8	9C	10011100
1E9	94	10010100
1EA	94	10010100
1EB	94	10010100
1EC	9C	10011100
1ED	94	10010100
1EE	9C	10011100
1EF	94	10010100
1F0	9C	10011100
1F1	9C	10011100
1F2	94	10010100
1F3	9C	10011100
1F4	95	10010101
1F5	9C	10011100
1F6	94	10010100
1F7	94	10010100
1F8	D4	11010100
1F9	BC	10111100
1FA	B8	10111000
1FB	B8	10111000
1FC	94	10010100
1FD	94	10010100
1FE	9C	10011100
1FF	94	10010100

PART NUMBER: 23-034D2-00
DEVICE TYPE:512 X 8
SCHEMATIC SHEET #:D-CS-M8391-0-MCTM
LOCATION/DESCRIPTION: E85 / UCODE<16:23>

LEFT COLUMN OF BIN DATA IS MSB
BINARY DATA "1" = HIGH
BINARY DATA "0" = LOW

THIS DRAWING AND SPECIFICATIONS, HEREIN, ARE THE PROPERTY OF DIGITAL EQUIPMENT CORPORATION AND SHALL NOT BE REPRODUCED OR COPIED OR USED IN WHOLE OR IN PART AS THE BASIS FOR THE MANUFACTURE OR SALE OF ITEMS WITHOUT WRITTEN PERMISSION. COPYRIGHT © 1981, DIGITAL EQUIPMENT CORPORATION

REVISIONS — CHK | CHANGE NO. | REV

digital — DRN. G.M. Hafner — DATE 27-OCT-81 — CHK'D. — DATE — ENG. — DATE
BOARD LOCATION: — SHEET 09 OF 16
DSK:GLMC09.T2P[1106,1500][27-OCT-81 18:24 — NEXT HIGHER ASSEMBLY: B-DD-M8391-0-0
FIRST USED ON OPTION/MODEL: 11/730

TITLE: MEM. CTLR. ROM AND PAL LISTINGS
SIZE D — CODE GL — NUMBER M8391-0-0 — REV. A

G.M. HAFNER, [1106,1500]GLMC09.DPL, SCALE 2, "D" RELEASE BOX
G.M. HAFNER GLMC09.PLO[1106,1500] 27-OCT-81 18:30

HEX LOC	HEX DAT	BIN DAT	HEX LOC	HEX DAT	BIN DAT	HEX LOC	HEX DAT	BIN DAT	HEX LOC	HEX DAT	BIN DAT
000	00	00000000	040	01	00000001	080	08	00001000	0C0	02	00000010
001	00	00000000	041	01	00000001	081	B1	10110001	0C1	01	00000001
002	00	00000000	042	01	00000001	082	02	00000010	0C2	02	00000010
003	00	00000000	043	02	00000010	083	81	10000001	0C3	01	00000001
004	00	00000000	044	01	00000001	084	81	10000001	0C4	01	00000001
005	00	00000000	045	01	00000001	085	85	10000101	0C5	81	10000001
006	00	00000000	046	98	10011000	086	02	00000010	0C6	01	00000001
007	D9	11011001	047	B1	10110001	087	01	00000001	0C7	81	10000001
008	41	01000001	048	01	00000001	088	01	00000001	0C8	80	10000000
009	08	00001000	049	02	00000010	089	85	10000101	0C9	01	00000001
00A	01	00000001	04A	02	00000010	08A	82	10000010	0CA	00	00000000
00B	01	00000001	04B	01	00000001	08B	81	10000001	0CB	41	01000001
00C	99	10011001	04C	01	00000001	08C	01	00000001	0CC	01	00000001
00D	99	10011001	04D	01	00000001	08D	B1	10110001	0CD	01	00000001
00E	08	00001000	04E	00	00000000	08E	81	10000001	0CE	01	00000001
00F	01	00000001	04F	99	10011001	08F	81	10000001	0CF	01	00000001
010	B1	10110001	050	19	00011001	090	81	10000001	0D0	85	10000101
011	B1	10110001	051	19	00011001	091	81	10000001	0D1	01	00000001
012	81	10000001	052	31	00110001	092	85	10000101	0D2	98	10011000
013	B1	10110001	053	85	10000101	093	C1	11000001	0D3	31	00110001
014	B1	10110001	054	85	10000101	094	01	00000001	0D4	B1	10110001
015	42	01000010	055	01	00000001	095	81	10000001	0D5	01	00000001
016	02	00000010	056	02	00000010	096	B1	10110001	0D6	01	00000001
017	02	00000010	057	01	00000001	097	C1	11000001	0D7	01	00000001
018	02	00000010	058	01	00000001	098	81	10000001	0D8	98	10011000
019	B1	10110001	059	19	00011001	099	85	10000101	0D9	01	00000001
01A	B1	10110001	05A	19	00011001	09A	81	10000001	0DA	98	10011000
01B	02	00000010	05B	09	00001001	09B	81	10000001	0DB	98	10011000
01C	01	00000001	05C	05	00000101	09C	81	10000001	0DC	19	00011001
01D	99	10011001	05D	11	00010001	09D	85	10000101	0DD	18	00011000
01E	98	10011000	05E	31	00110001	09E	81	10000001	0DE	19	00011001
01F	B1	10110001	05F	31	00110001	09F	01	00000001	0DF	00	00000000
020	01	00000001	060	01	00000001	0A0	02	00000010	0E0	85	10000101
021	02	00000010	061	01	00000001	0A1	85	10000101	0E1	01	00000001
022	01	00000001	062	01	00000001	0A2	02	00000010	0E2	02	00000010
023	01	00000001	063	01	00000001	0A3	01	00000001	0E3	02	00000010
024	01	00000001	064	01	00000001	0A4	01	00000001	0E4	31	00110001
025	00	00000000	065	01	00000001	0A5	B1	10110001	0E5	01	00000001
026	01	00000001	066	01	00000001	0A6	98	10011000	0E6	01	00000001
027	99	10011001	067	08	00001000	0A7	31	00110001	0E7	02	00000010
028	85	10000101	068	01	00000001	0A8	01	00000001	0E8	01	00000001
029	85	10000101	069	01	00000001	0A9	02	00000010	0E9	01	00000001
02A	B1	10110001	06A	01	00000001	0AA	01	00000001	0EA	01	00000001
02B	01	00000001	06B	01	00000001	0AB	85	10000101	0EB	01	00000001
02C	B1	10110001	06C	01	00000001	0AC	99	10011001	0EC	01	00000001
02D	01	00000001	06D	01	00000001	0AD	02	00000010	0ED	01	00000001
02E	B1	10110001	06E	C1	11000001	0AE	99	10011001	0EE	01	00000001
02F	02	00000010	06F	01	00000001	0AF	B1	10110001	0EF	01	00000001
030	01	00000001	070	01	00000001	0B0	98	10011000	0F0	03	00000011
031	01	00000001	071	99	10011001	0B1	31	00110001	0F1	01	00000001
032	01	00000001	072	99	10011001	0B2	01	00000001	0F2	03	00000011
033	01	00000001	073	99	10011001	0B3	01	00000001	0F3	81	10000001
034	01	00000001	074	01	00000001	0B4	81	10000001	0F4	03	00000011
035	01	00000001	075	99	10011001	0B5	31	00110001	0F5	01	00000001
036	01	00000001	076	99	10011001	0B6	B1	10110001	0F6	03	00000011
037	81	10000001	077	99	10011001	0B7	B1	10110001	0F7	81	10000001
038	02	00000010	078	08	00001000	0B8	81	10000001	0F8	85	10000101
039	01	00000001	079	08	00001000	0B9	01	00000001	0F9	05	00000101
03A	81	10000001	07A	08	00001000	0BA	01	00000001	0FA	11	00010001
03B	02	00000010	07B	85	10000101	0BB	41	01000001	0FB	01	00000001
03C	01	00000001	07C	01	00000001	0BC	81	10000001	0FC	01	00000001
03D	01	00000001	07D	01	00000001	0BD	B1	10110001	0FD	01	00000001
03E	81	10000001	07E	01	00000001	0BE	01	00000001	0FE	31	00110001
03F	01	00000001	07F	B1	10110001	0BF	01	00000001	0FF	41	01000001

HEX LOC	HEX DAT	BIN DAT	HEX LOC	HEX DAT	BIN DAT	HEX LOC	HEX DAT	BIN DAT	HEX LOC	HEX DAT	BIN DAT
100	02	00000010	140	81	10000001	180	00	00000000	1C0	02	00000010
101	01	00000001	141	01	00000001	181	31	00110001	1C1	02	00000010
102	02	00000010	142	81	10000001	182	00	00000000	1C2	01	00000001
103	01	00000001	143	01	00000001	183	31	00110001	1C3	01	00000001
104	41	01000001	144	B1	10110001	184	01	00000001	1C4	02	00000010
105	01	00000001	145	01	00000001	185	01	00000001	1C5	02	00000010
106	41	01000001	146	01	00000001	186	01	00000001	1C6	01	00000001
107	01	00000001	147	01	00000001	187	01	00000001	1C7	02	00000010
108	01	00000001	148	01	00000001	188	01	00000001	1C8	02	00000010
109	01	00000001	149	01	00000001	189	01	00000001	1C9	02	00000010
10A	01	00000001	14A	81	10000001	18A	41	01000001	1CA	01	00000001
10B	01	00000001	14B	81	10000001	18B	01	00000001	1CB	01	00000001
10C	01	00000001	14C	01	00000001	18C	01	00000001	1CC	02	00000010
10D	01	00000001	14D	01	00000001	18D	01	00000001	1CD	02	00000010
10E	41	01000001	14E	01	00000001	18E	01	00000001	1CE	01	00000001
10F	01	00000001	14F	81	10000001	18F	01	00000001	1CF	01	00000001
110	01	00000001	150	00	00000000	190	81	10000001	1D0	81	10000001
111	99	10011001	151	01	00000001	191	03	00000011	1D1	01	00000001
112	42	01000010	152	01	00000001	192	01	00000001	1D2	03	00000011
113	99	10011001	153	01	00000001	193	11	00010001	1D3	01	00000001
114	41	01000001	154	81	10000001	194	01	00000001	1D4	01	00000001
115	99	10011001	155	02	00000010	195	01	00000001	1D5	01	00000001
116	41	01000001	156	01	00000001	196	01	00000001	1D6	01	00000001
117	01	00000001	157	01	00000001	197	01	00000001	1D7	01	00000001
118	01	00000001	158	01	00000001	198	41	01000001	1D8	81	10000001
119	08	00001000	159	01	00000001	199	49	01001001	1D9	05	00000101
11A	41	01000001	15A	00	00000000	19A	41	01000001	1DA	81	10000001
11B	08	00001000	15B	01	00000001	19B	01	00000001	1DB	05	00000101
11C	01	00000001	15C	01	00000001	19C	41	01000001	1DC	81	10000001
11D	01	00000001	15D	81	10000001	19D	01	00000001	1DD	85	10000101
11E	01	00000001	15E	01	00000001	19E	01	00000001	1DE	01	00000001
11F	01	00000001	15F	81	10000001	19F	81	10000001	1DF	B1	10110001
120	01	00000001	160	01	00000001	1A0	01	00000001	1E0	01	00000001
121	99	10011001	161	01	00000001	1A1	01	00000001	1E1	B1	10110001
122	01	00000001	162	01	00000001	1A2	01	00000001	1E2	02	00000010
123	99	10011001	163	01	00000001	1A3	01	00000001	1E3	85	10000101
124	42	01000010	164	02	00000010	1A4	01	00000001	1E4	81	10000001
125	99	10011001	165	01	00000001	1A5	01	00000001	1E5	05	00000101
126	01	00000001	166	01	00000001	1A6	01	00000001	1E6	01	00000001
127	B1	10110001	167	01	00000001	1A7	02	00000010	1E7	B1	10110001
128	01	00000001	168	81	10000001	1A8	41	01000001	1E8	01	00000001
129	C1	11000001	169	81	10000001	1A9	01	00000001	1E9	81	10000001
12A	01	00000001	16A	81	10000001	1AA	01	00000001	1EA	02	00000010
12B	81	10000001	16B	81	10000001	1AB	01	00000001	1EB	81	10000001
12C	01	00000001	16C	02	00000010	1AC	41	01000001	1EC	01	00000001
12D	81	10000001	16D	01	00000001	1AD	41	01000001	1ED	81	10000001
12E	41	01000001	16E	01	00000001	1AE	41	01000001	1EE	01	00000001
12F	81	10000001	16F	01	00000001	1AF	02	00000010	1EF	81	10000001
130	01	00000001	170	81	10000001	1B0	01	00000001	1F0	01	00000001
131	01	00000001	171	81	10000001	1B1	05	00000101	1F1	01	00000001
132	01	00000001	172	81	10000001	1B2	81	10000001	1F2	01	00000001
133	81	10000001	173	81	10000001	1B3	01	00000001	1F3	01	00000001
134	42	01000010	174	02	00000010	1B4	B1	10110001	1F4	02	00000010
135	01	00000001	175	81	10000001	1B5	B1	10110001	1F5	01	00000001
136	41	01000001	176	41	01000001	1B6	41	01000001	1F6	41	01000001
137	81	10000001	177	81	10000001	1B7	81	10000001	1F7	02	00000010
138	01	00000001	178	01	00000001	1B8	85	10000101	1F8	01	00000001
139	C1	11000001	179	01	00000001	1B9	05	00000101	1F9	01	00000001
13A	01	00000001	17A	41	01000001	1BA	03	00000011	1FA	01	00000001
13B	81	10000001	17B	01	00000001	1BB	81	10000001	1FB	01	00000001
13C	01	00000001	17C	81	10000001	1BC	B1	10110001	1FC	02	00000010
13D	81	10000001	17D	85	10000101	1BD	01	00000001	1FD	02	00000010
13E	01	00000001	17E	01	00000001	1BE	41	01000001	1FE	01	00000001
13F	81	10000001	17F	01	00000001	1BF	01	00000001	1FF	02	00000010

PART NUMBER: 23-035D2-00
DEVICE TYPE:512 X 8
SCHEMATIC SHEET #:D-CS-M8391-0-MCTM
LOCATION/DESCRIPTION: E62 / UCODE<24:31>

LEFT COLUMN OF BIN DATA IS MSB
BINARY DATA "1" = HIGH
BINARY DATA "0" = LOW

THIS DRAWING AND SPECIFICATIONS, HEREIN, ARE THE PROPERTY OF DIGITAL EQUIPMENT CORPORATION AND SHALL NOT BE REPRODUCED OR COPIED OR USED IN WHOLE OR IN PART AS THE BASIS FOR THE MANUFACTURE OR SALE OF ITEMS WITHOUT WRITTEN PERMISSION. COPYRIGHT © 1981, DIGITAL EQUIPMENT CORPORATION

REVISIONS | CHK | CHANGE NO. | REV

digital | DRN. G.M.Hafner | DATE 27-OCT-81 | ENG. | DATE | CHK'D. | DATE | BOARD LOCATION: | SHEET 10 OF 16

DSK:GLMC10.T2P[1106,1500] 27-OCT-81 10:24 | NEXT HIGHER ASSEMBLY: B-DD-M8391-0-0
FIRST USED ON OPTION/MODEL: 11/730

TITLE: MEM. CTLR. ROM AND PAL LISTINGS
SIZE D | CODE GL | NUMBER M8391-0-0 | REV. A

G.M. HAFNER, [1106,1500]GLMC10.DPL, SCALE 2, "D" RELEASE BOX
G.M. HAFNER GLMC10.PLO[1106,1500] 27-OCT-81 10:30

HEX LOC	HEX DAT	BIN DAT
000	00	00000000
001	00	00000000
002	00	00000000
003	00	00000000
004	00	00000000
005	00	00000000
006	00	00000000
007	D5	11010101
008	95	10010101
009	D0	11010000
00A	D0	11010000
00B	D0	11010000
00C	D5	11010101
00D	D5	11010101
00E	D0	11010000
00F	D0	11010000
010	D0	11010000
011	D0	11010000
012	D1	11010001
013	D0	11010000
014	D0	11010000
015	D9	11011001
016	59	01011001
017	D9	11011001
018	59	01011001
019	D0	11010000
01A	D0	11010000
01B	59	01011001
01C	95	10010101
01D	95	10010101
01E	95	10010101
01F	90	10010000
020	90	10010000
021	99	10011001
022	99	10011001
023	91	10010001
024	90	10010000
025	90	10010000
026	95	10010101
027	95	10010101
028	95	10010101
029	95	10010101
02A	90	10010000
02B	90	10010000
02C	90	10010000
02D	91	10010001
02E	90	10010000
02F	19	00011001
030	F0	11110000
031	F0	11110000
032	F0	11110000
033	D0	11010000
034	D0	11010000
035	D0	11010000
036	D0	11010000
037	F2	11110010
038	F0	11110000
039	F2	11110010
03A	D2	11010010
03B	D0	11010000
03C	D2	11010010
03D	90	10010000
03E	F0	11110000
03F	F2	11110010

HEX LOC	HEX DAT	BIN DAT
040	F0	11110000
041	F0	11110000
042	F0	11110000
043	D9	11011001
044	D0	11010000
045	D0	11010000
046	95	10010101
047	90	10010000
048	90	10010000
049	99	10011001
04A	99	10011001
04B	99	10011001
04C	91	10010001
04D	90	10010000
04E	90	10010000
04F	95	10010101
050	95	10010101
051	95	10010101
052	D0	11010000
053	95	10010101
054	95	10010101
055	D0	11010000
056	D9	11011001
057	F0	11110000
058	D5	11010101
059	F0	11110000
05A	F0	11110000
05B	F0	11110000
05C	F0	11110000
05D	F0	11110000
05E	F0	11110000
05F	F0	11110000
060	F2	11110010
061	F0	11110000
062	F0	11110000
063	F0	11110000
064	F0	11110000
065	F0	11110000
066	F0	11110000
067	90	10010000
068	F0	11110000
069	F0	11110000
06A	F0	11110000
06B	F0	11110000
06C	F0	11110000
06D	F0	11110000
06E	B0	10110000
06F	D0	11010000
070	B0	10110000
071	95	10010101
072	90	10010000
073	D0	11010000
074	F2	11110010
075	D5	11010101
076	B0	10110000
077	B0	10110000
078	90	10010000
079	90	10010000
07A	B0	10110000
07B	D0	11010000
07C	D0	11010000
07D	D0	11010000
07E	D0	11010000
07F	D0	11010000

HEX LOC	HEX DAT	BIN DAT
080	90	10010000
081	C0	11000000
082	59	01011001
083	D0	11010000
084	D0	11010000
085	D0	11010000
086	D9	11011001
087	D0	11010000
088	D0	11010000
089	D0	11010000
08A	D9	11011001
08B	D0	11010000
08C	D1	11010001
08D	D0	11010000
08E	D1	11010001
08F	B0	10110000
090	10	00010000
091	D0	11010000
092	D0	11010000
093	D1	11010001
094	D0	11010000
095	D0	11010000
096	D0	11010000
097	D1	11010001
098	90	10010000
099	D0	11010000
09A	D0	11010000
09B	10	00010000
09C	90	10010000
09D	D0	11010000
09E	B0	10110000
09F	D0	11010000
0A0	D9	11011001
0A1	94	10010100
0A2	D9	11011001
0A3	D1	11010001
0A4	D0	11010000
0A5	90	10010000
0A6	94	10010100
0A7	90	10010000
0A8	D1	11010001
0A9	99	10011001
0AA	D1	11010001
0AB	94	10010100
0AC	95	10010101
0AD	99	10011001
0AE	95	10010101
0AF	90	10010000
0B0	94	10010100
0B1	90	10010000
0B2	90	10010000
0B3	90	10010000
0B4	90	10010000
0B5	90	10010000
0B6	90	10010000
0B7	90	10010000
0B8	90	10010000
0B9	90	10010000
0BA	F0	11110000
0BB	F0	11110000
0BC	90	10010000
0BD	10	00010000
0BE	F0	11110000
0BF	F0	11110000

HEX LOC	HEX DAT	BIN DAT
0C0	99	10011001
0C1	90	10010000
0C2	99	10011001
0C3	B0	10110000
0C4	90	10010000
0C5	F2	11110010
0C6	B0	10110000
0C7	F0	11110000
0C8	F0	11110000
0C9	D0	11010000
0CA	F0	11110000
0CB	F2	11110010
0CC	F0	11110000
0CD	F0	11110000
0CE	D0	11010000
0CF	F0	11110000
0D0	94	10010100
0D1	D0	11010000
0D2	94	10010100
0D3	90	10010000
0D4	90	10010000
0D5	95	10010101
0D6	D0	11010000
0D7	95	10010101
0D8	95	10010101
0D9	90	10010000
0DA	95	10010101
0DB	94	10010100
0DC	95	10010101
0DD	94	10010100
0DE	95	10010101
0DF	B0	10110000
0E0	94	10010100
0E1	10	00010000
0E2	90	10010000
0E3	59	01011001
0E4	D0	11010000
0E5	D0	11010000
0E6	D0	11010000
0E7	59	01011001
0E8	90	10010000
0E9	F0	11110000
0EA	B0	10110000
0EB	F0	11110000
0EC	90	10010000
0ED	D4	11010100
0EE	B0	10110000
0EF	D5	11010101
0F0	D1	11010001
0F1	D9	11011001
0F2	D9	11011001
0F3	19	00011001
0F4	D9	11011001
0F5	D9	11011001
0F6	D9	11011001
0F7	D9	11011001
0F8	F0	11110000
0F9	F0	11110000
0FA	F0	11110000
0FB	D0	11010000
0FC	F0	11110000
0FD	F0	11110000
0FE	F0	11110000
0FF	B0	10110000

HEX LOC	HEX DAT	BIN DAT
100	B0	10110000
101	F0	11110000
102	F0	11110000
103	F0	11110000
104	F0	11110000
105	F0	11110000
106	F0	11110000
107	F0	11110000
108	F0	11110000
109	F0	11110000
10A	F0	11110000
10B	F0	11110000
10C	F0	11110000
10D	F0	11110000
10E	D3	11010011
10F	F2	11110010
110	F0	11110000
111	D4	11010100
112	99	10011001
113	D5	11010101
114	F0	11110000
115	90	10010000
116	D2	11010010
117	F0	11110000
118	F0	11110000
119	90	10010000
11A	90	10010000
11B	B0	10110000
11C	F0	11110000
11D	D0	11010000
11E	F0	11110000
11F	D0	11010000
120	F0	11110000
121	D4	11010100
122	F0	11110000
123	D5	11010101
124	99	10011001
125	90	10010000
126	F0	11110000
127	D0	11010000
128	F0	11110000
129	D1	11010001
12A	F0	11110000
12B	B0	10110000
12C	90	10010000
12D	B0	10110000
12E	D3	11010011
12F	B0	10110000
130	B0	10110000
131	D1	11010001
132	B0	10110000
133	D1	11010001
134	99	10011001
135	D1	11010001
136	D0	11010000
137	D1	11010001
138	90	10010000
139	D1	11010001
13A	B0	10110000
13B	B0	10110000
13C	90	10010000
13D	B0	10110000
13E	D2	11010010
13F	B0	10110000

HEX LOC	HEX DAT	BIN DAT
140	B2	10110010
141	B0	10110000
142	B0	10110000
143	B0	10110000
144	D0	11010000
145	B0	10110000
146	F0	11110000
147	90	10010000
148	90	10010000
149	B0	10110000
14A	D1	11010001
14B	B0	10110000
14C	90	10010000
14D	90	10010000
14E	D0	11010000
14F	B0	10110000
150	91	10010001
151	B0	10110000
152	99	10011001
153	B0	10110000
154	90	10010000
155	B0	10110000
156	F0	11110000
157	B0	10110000
158	91	10010001
159	90	10010000
15A	93	10010011
15B	90	10010000
15C	90	10010000
15D	40	01000000
15E	F0	11110000
15F	70	01110000
160	D1	11010001
161	D0	11010000
162	D9	11011001
163	F0	11110000
164	19	00011001
165	B0	10110000
166	F0	11110000
167	B0	10110000
168	B0	10110000
169	B0	10110000
16A	F0	11110000
16B	F2	11110010
16C	99	10011001
16D	D1	11010001
16E	F0	11110000
16F	D9	11011001
170	B0	10110000
171	B0	10110000
172	F0	11110000
173	F0	11110000
174	D0	11010000
175	F0	11110000
176	F0	11110000
177	10	00010000
178	D1	11010001
179	D1	11010001
17A	D9	11011001
17B	D1	11010001
17C	D0	11010000
17D	D0	11010000
17E	D0	11010000
17F	90	10010000

HEX LOC	HEX DAT	BIN DAT
180	90	10010000
181	D0	11010000
182	B0	10110000
183	D0	11010000
184	F0	11110000
185	99	10011001
186	F0	11110000
187	99	10011001
188	D1	11010001
189	D1	11010001
18A	D9	11011001
18B	D1	11010001
18C	F0	11110000
18D	99	10011001
18E	D3	11010011
18F	99	10011001
190	B0	10110000
191	D0	11010000
192	F0	11110000
193	F0	11110000
194	F0	11110000
195	F0	11110000
196	D3	11010011
197	B0	10110000
198	F0	11110000
199	F0	11110000
19A	F0	11110000
19B	F0	11110000
19C	F0	11110000
19D	F0	11110000
19E	D3	11010011
19F	B0	10110000
1A0	F0	11110000
1A1	F0	11110000
1A2	F0	11110000
1A3	F0	11110000
1A4	F0	11110000
1A5	F0	11110000
1A6	F0	11110000
1A7	5B	01011011
1A8	F0	11110000
1A9	F0	11110000
1AA	F0	11110000
1AB	F0	11110000
1AC	F0	11110000
1AD	F0	11110000
1AE	D3	11010011
1AF	D9	11011001
1B0	D0	11010000
1B1	D0	11010000
1B2	D0	11010000
1B3	D0	11010000
1B4	D0	11010000
1B5	D0	11010000
1B6	D3	11010011
1B7	D0	11010000
1B8	F0	11110000
1B9	49	01001001
1BA	D0	11010000
1BB	59	01011001
1BC	D0	11010000
1BD	90	10010000
1BE	D3	11010011
1BF	F0	11110000

HEX LOC	HEX DAT	BIN DAT
1C0	D0	11010000
1C1	D0	11010000
1C2	F0	11110000
1C3	F2	11110010
1C4	D0	11010000
1C5	F0	11110000
1C6	D0	11010000
1C7	D9	11011001
1C8	D0	11010000
1C9	D0	11010000
1CA	F0	11110000
1CB	F0	11110000
1CC	B0	10110000
1CD	B0	10110000
1CE	D0	11010000
1CF	D9	11011001
1D0	D0	11010000
1D1	F0	11110000
1D2	D0	11010000
1D3	F2	11110010
1D4	D0	11010000
1D5	F0	11110000
1D6	D2	11010010
1D7	F0	11110000
1D8	B0	10110000
1D9	D0	11010000
1DA	90	10010000
1DB	D0	11010000
1DC	D0	11010000
1DD	D0	11010000
1DE	D0	11010000
1DF	D0	11010000
1E0	B0	10110000
1E1	D0	11010000
1E2	D9	11011001
1E3	D0	11010000
1E4	B0	10110000
1E5	D0	11010000
1E6	D2	11010010
1E7	D0	11010000
1E8	D3	11010011
1E9	10	00010000
1EA	D9	11011001
1EB	10	00010000
1EC	D0	11010000
1ED	B0	10110000
1EE	D2	11010010
1EF	B0	10110000
1F0	D1	11010001
1F1	D1	11010001
1F2	D9	11011001
1F3	D1	11010001
1F4	59	01011001
1F5	D0	11010000
1F6	F0	11110000
1F7	D9	11011001
1F8	90	10010000
1F9	B0	10110000
1FA	90	10010000
1FB	90	10010000
1FC	59	01011001
1FD	D9	11011001
1FE	D3	11010011
1FF	D9	11011001

PART NUMBER: 23-036D2-00
DEVICE TYPE:512 X 8
SCHEMATIC SHEET #:D-CS-M8391-0-MCTM
LOCATION/DESCRIPTION: E98 / UCODE<32:39>

LEFT COLUMN OF BIN DATA IS MSB
BINARY DATA "1" = HIGH
BINARY DATA "0" = LOW

THIS DRAWING AND SPECIFICATIONS, HEREIN, ARE THE PROPERTY OF DIGITAL EQUIPMENT CORPORATION AND SHALL NOT BE REPRODUCED OR COPIED OR USED IN WHOLE OR IN PART AS THE BASIS FOR THE MANUFACTURE OR SALE OF ITEMS WITHOUT WRITTEN PERMISSION. COPYRIGHT © 1981, DIGITAL EQUIPMENT CORPORATION

REVISIONS: CHK | CHANGE NO. | REV

digital — DRN. D M Hafner — DATE 27-OCT-81 — CHK'D. — DATE — ENG. — DATE
BOARD LOCATION: SHEET 11 OF 16
DSK:GLMC11.T2P[1106,1500][27-OCT-81 18:25
NEXT HIGHER ASSEMBLY: B-DD-M8391-0-0
FIRST USED ON OPTION/MODEL: 11/730

TITLE: MEM. CTLR. ROM AND PAL LISTINGS
SIZE D | CODE GL | NUMBER M8391-0-0 | REV. A

G.M. HAFNER, [1106,1500]GLMC11.DPL, SCALE 2, "D" RELEASE BOX
G.M. HAFNER GLMC11.PLO[1106,1500] 27-OCT-81 18:30

HEX LOC	HEX DAT	BIN DAT
000	00	00000000
001	00	00000000
002	00	00000000
003	00	00000000
004	00	00000000
005	00	00000000
006	00	00000000
007	E9	11101001
008	E9	11101001
009	E9	11101001
00A	ED	11101101
00B	E9	11101001
00C	E9	11101001
00D	E9	11101001
00E	E9	11101001
00F	ED	11101101
010	E9	11101001
011	E9	11101001
012	E9	11101001
013	E9	11101001
014	E9	11101001
015	E9	11101001
016	E9	11101001
017	E9	11101001
018	E9	11101001
019	E9	11101001
01A	E9	11101001
01B	E9	11101001
01C	E9	11101001
01D	E9	11101001
01E	E9	11101001
01F	EB	11101011
020	EB	11101011
021	EB	11101011
022	EF	11101111
023	E9	11101001
024	E9	11101001
025	E9	11101001
026	E9	11101001
027	E9	11101001
028	E9	11101001
029	E9	11101001
02A	EB	11101011
02B	EB	11101011
02C	E9	11101001
02D	E9	11101001
02E	E9	11101001
02F	E9	11101001
030	E9	11101001
031	EB	11101011
032	E9	11101001
033	6D	01101101
034	69	01101001
035	ED	11101101
036	E9	11101001
037	E9	11101001
038	E9	11101001
039	EB	11101011
03A	EB	11101011
03B	EB	11101011
03C	EB	11101011
03D	E9	11101001
03E	E9	11101001
03F	EB	11101011

HEX LOC	HEX DAT	BIN DAT
040	EB	11101011
041	ED	11101101
042	6D	01101101
043	6D	01101101
044	E9	11101001
045	E9	11101001
046	E9	11101001
047	EB	11101011
048	EB	11101011
049	EB	11101011
04A	EB	11101011
04B	EB	11101011
04C	E9	11101001
04D	E9	11101001
04E	E9	11101001
04F	E9	11101001
050	E9	11101001
051	E9	11101001
052	EB	11101011
053	E9	11101001
054	E9	11101001
055	E9	11101001
056	ED	11101101
057	69	01101001
058	E1	11100001
059	F9	11111001
05A	E9	11101001
05B	E9	11101001
05C	E9	11101001
05D	E9	11101001
05E	E9	11101001
05F	F9	11111001
060	EA	11101010
061	E9	11101001
062	E9	11101001
063	E9	11101001
064	E9	11101001
065	E9	11101001
066	E9	11101001
067	E9	11101001
068	E9	11101001
069	E9	11101001
06A	E9	11101001
06B	E9	11101001
06C	E9	11101001
06D	E9	11101001
06E	E9	11101001
06F	E9	11101001
070	EB	11101011
071	E9	11101001
072	E9	11101001
073	E9	11101001
074	EB	11101011
075	E9	11101001
076	E9	11101001
077	E9	11101001
078	E9	11101001
079	E9	11101001
07A	E9	11101001
07B	D9	11011001
07C	E9	11101001
07D	E9	11101001
07E	E9	11101001
07F	E9	11101001

HEX LOC	HEX DAT	BIN DAT
080	E9	11101001
081	E9	11101001
082	E9	11101001
083	E9	11101001
084	E9	11101001
085	E9	11101001
086	EF	11101111
087	E9	11101001
088	E9	11101001
089	D9	11011001
08A	E9	11101001
08B	E9	11101001
08C	ED	11101101
08D	E9	11101001
08E	ED	11101101
08F	E9	11101001
090	E9	11101001
091	E9	11101001
092	D9	11011001
093	E9	11101001
094	E9	11101001
095	E9	11101001
096	E9	11101001
097	E9	11101001
098	E9	11101001
099	E9	11101001
09A	E9	11101001
09B	E9	11101001
09C	E9	11101001
09D	E9	11101001
09E	E9	11101001
09F	E9	11101001
0A0	ED	11101101
0A1	E9	11101001
0A2	ED	11101101
0A3	E9	11101001
0A4	E9	11101001
0A5	EB	11101011
0A6	E9	11101001
0A7	EB	11101011
0A8	E9	11101001
0A9	EB	11101011
0AA	E9	11101001
0AB	E9	11101001
0AC	E9	11101001
0AD	EB	11101011
0AE	E9	11101001
0AF	EB	11101011
0B0	EB	11101011
0B1	EB	11101011
0B2	ED	11101101
0B3	ED	11101101
0B4	E9	11101001
0B5	C9	11001001
0B6	E9	11101001
0B7	E9	11101001
0B8	E9	11101001
0B9	E9	11101001
0BA	E9	11101001
0BB	E8	11101000
0BC	E9	11101001
0BD	C9	11001001
0BE	EB	11101011
0BF	EB	11101011

HEX LOC	HEX DAT	BIN DAT
0C0	E9	11101001
0C1	E9	11101001
0C2	E9	11101001
0C3	E9	11101001
0C4	E9	11101001
0C5	EB	11101011
0C6	E9	11101001
0C7	E9	11101001
0C8	EB	11101011
0C9	E9	11101001
0CA	E9	11101001
0CB	EB	11101011
0CC	EB	11101011
0CD	E9	11101001
0CE	E9	11101001
0CF	E9	11101001
0D0	E9	11101001
0D1	E9	11101001
0D2	E9	11101001
0D3	EB	11101011
0D4	EB	11101011
0D5	E9	11101001
0D6	E9	11101001
0D7	E9	11101001
0D8	F9	11111001
0D9	EB	11101011
0DA	E9	11101001
0DB	EB	11101011
0DC	F9	11111001
0DD	E9	11101001
0DE	E9	11101001
0DF	EB	11101011
0E0	E9	11101001
0E1	EB	11101011
0E2	E9	11101001
0E3	E9	11101001
0E4	E9	11101001
0E5	E9	11101001
0E6	E9	11101001
0E7	E9	11101001
0E8	E9	11101001
0E9	AC	10101100
0EA	E9	11101001
0EB	E8	11101000
0EC	E9	11101001
0ED	E1	11100001
0EE	69	01101001
0EF	E1	11100001
0F0	E9	11101001
0F1	F9	11111001
0F2	E9	11101001
0F3	E9	11101001
0F4	E9	11101001
0F5	F9	11111001
0F6	E9	11101001
0F7	E9	11101001
0F8	F9	11111001
0F9	C9	11001001
0FA	F9	11111001
0FB	E9	11101001
0FC	E9	11101001
0FD	E9	11101001
0FE	E9	11101001
0FF	E9	11101001

HEX LOC	HEX DAT	BIN DAT
100	E9	11101001
101	E9	11101001
102	EC	11101100
103	E9	11101001
104	EB	11101011
105	E9	11101001
106	E9	11101001
107	E9	11101001
108	E9	11101001
109	E9	11101001
10A	E9	11101001
10B	E9	11101001
10C	E9	11101001
10D	E9	11101001
10E	E9	11101001
10F	EB	11101011
110	E9	11101001
111	E9	11101001
112	EB	11101011
113	E9	11101001
114	E9	11101001
115	E9	11101001
116	E9	11101001
117	E9	11101001
118	E9	11101001
119	E9	11101001
11A	E9	11101001
11B	E9	11101001
11C	E9	11101001
11D	E9	11101001
11E	E9	11101001
11F	E9	11101001
120	E9	11101001
121	E9	11101001
122	E9	11101001
123	E9	11101001
124	EB	11101011
125	E9	11101001
126	E9	11101001
127	E9	11101001
128	E9	11101001
129	E9	11101001
12A	E9	11101001
12B	E9	11101001
12C	E9	11101001
12D	E9	11101001
12E	E9	11101001
12F	E9	11101001
130	E9	11101001
131	ED	11101101
132	E9	11101001
133	ED	11101101
134	EB	11101011
135	ED	11101101
136	E9	11101001
137	ED	11101101
138	E9	11101001
139	E9	11101001
13A	E9	11101001
13B	E9	11101001
13C	E9	11101001
13D	E9	11101001
13E	E9	11101001
13F	E9	11101001

HEX LOC	HEX DAT	BIN DAT
140	EB	11101011
141	E9	11101001
142	E9	11101001
143	E9	11101001
144	F9	11111001
145	E9	11101001
146	E9	11101001
147	E9	11101001
148	E9	11101001
149	E9	11101001
14A	E9	11101001
14B	E9	11101001
14C	E9	11101001
14D	E9	11101001
14E	EB	11101011
14F	E9	11101001
150	ED	11101101
151	E9	11101001
152	ED	11101101
153	E9	11101001
154	E9	11101001
155	E9	11101001
156	EB	11101011
157	E9	11101001
158	E9	11101001
159	E9	11101001
15A	E9	11101001
15B	E9	11101001
15C	E9	11101001
15D	E9	11101001
15E	E9	11101001
15F	E9	11101001
160	E9	11101001
161	F1	11110001
162	E9	11101001
163	E9	11101001
164	E9	11101001
165	E9	11101001
166	E9	11101001
167	E9	11101001
168	E9	11101001
169	E9	11101001
16A	E9	11101001
16B	E9	11101001
16C	E9	11101001
16D	E9	11101001
16E	E9	11101001
16F	E9	11101001
170	E9	11101001
171	E9	11101001
172	E9	11101001
173	E9	11101001
174	EB	11101011
175	E9	11101001
176	EB	11101011
177	E9	11101001
178	69	01101001
179	69	01101001
17A	69	01101001
17B	69	01101001
17C	E9	11101001
17D	C9	11001001
17E	E9	11101001
17F	E9	11101001

HEX LOC	HEX DAT	BIN DAT
180	EB	11101011
181	E9	11101001
182	EB	11101011
183	E9	11101001
184	E9	11101001
185	E9	11101001
186	EB	11101011
187	E9	11101001
188	E9	11101001
189	E9	11101001
18A	E9	11101001
18B	E9	11101001
18C	E9	11101001
18D	E9	11101001
18E	E9	11101001
18F	E9	11101001
190	E9	11101001
191	E1	11100001
192	E9	11101001
193	C9	11001001
194	E9	11101001
195	E9	11101001
196	69	01101001
197	E9	11101001
198	E9	11101001
199	E9	11101001
19A	E9	11101001
19B	E9	11101001
19C	E9	11101001
19D	EB	11101011
19E	E9	11101001
19F	E9	11101001
1A0	E9	11101001
1A1	E9	11101001
1A2	E9	11101001
1A3	E9	11101001
1A4	E9	11101001
1A5	E9	11101001
1A6	E9	11101001
1A7	EB	11101011
1A8	E9	11101001
1A9	E9	11101001
1AA	E9	11101001
1AB	E9	11101001
1AC	EC	11101100
1AD	E9	11101001
1AE	E9	11101001
1AF	EB	11101011
1B0	E9	11101001
1B1	D9	11011001
1B2	E9	11101001
1B3	C9	11001001
1B4	C9	11001001
1B5	F9	11111001
1B6	E9	11101001
1B7	E1	11100001
1B8	F9	11111001
1B9	E9	11101001
1BA	E1	11100001
1BB	E9	11101001
1BC	C9	11001001
1BD	E9	11101001
1BE	E9	11101001
1BF	E9	11101001

HEX LOC	HEX DAT	BIN DAT
1C0	E9	11101001
1C1	E9	11101001
1C2	E9	11101001
1C3	E9	11101001
1C4	E1	11100001
1C5	E1	11100001
1C6	EB	11101011
1C7	EF	11101111
1C8	E9	11101001
1C9	E9	11101001
1CA	E9	11101001
1CB	E9	11101001
1CC	E1	11100001
1CD	E1	11100001
1CE	EB	11101011
1CF	E9	11101001
1D0	E9	11101001
1D1	EB	11101011
1D2	E9	11101001
1D3	EB	11101011
1D4	E9	11101001
1D5	E9	11101001
1D6	E9	11101001
1D7	ED	11101101
1D8	E9	11101001
1D9	C9	11001001
1DA	E9	11101001
1DB	C9	11001001
1DC	E9	11101001
1DD	C9	11001001
1DE	E9	11101001
1DF	E9	11101001
1E0	E9	11101001
1E1	F9	11111001
1E2	E9	11101001
1E3	F9	11111001
1E4	E9	11101001
1E5	C9	11001001
1E6	E9	11101001
1E7	C9	11001001
1E8	E9	11101001
1E9	E9	11101001
1EA	E9	11101001
1EB	E9	11101001
1EC	68	01101000
1ED	E9	11101001
1EE	E9	11101001
1EF	E9	11101001
1F0	E9	11101001
1F1	E9	11101001
1F2	E9	11101001
1F3	E9	11101001
1F4	E9	11101001
1F5	6C	01101100
1F6	EB	11101011
1F7	ED	11101101
1F8	E9	11101001
1F9	E9	11101001
1FA	E9	11101001
1FB	E9	11101001
1FC	E9	11101001
1FD	ED	11101101
1FE	E9	11101001
1FF	ED	11101101

PART NUMBER: 23-037D2-00
DEVICE TYPE:512 X 8
SCHEMATIC SHEET #:D-CS-M8391-0-MCTM
LOCATION/DESCRIPTION: E63 / UCODE<40:47>

LEFT COLUMN OF BIN DATA IS MSB
BINARY DATA "1" = HIGH
BINARY DATA "0" = LOW

THIS DRAWING AND SPECIFICATIONS, HEREIN, ARE THE PROPERTY OF DIGITAL EQUIPMENT CORPORATION AND SHALL NOT BE REPRODUCED OR COPIED OR USED IN WHOLE OR IN PART AS THE BASIS FOR THE MANUFACTURE OR SALE OF ITEMS WITHOUT WRITTEN PERMISSION. COPYRIGHT © 1981, DIGITAL EQUIPMENT CORPORATION

REVISIONS | CHK | CHANGE NO. | REV

digital | DRN. D M Hafner | DATE 27-OCT-81 | CHK'D. | DATE | ENG. | DATE | BOARD LOCATION: | SHEET 12 OF 16

DSK:GLMC12.T2P[1106,1500] 27-OCT-81 18:25 | NEXT HIGHER ASSEMBLY: B-DD-M8391-0-0
FIRST USED ON OPTION/MODEL: 11/730

TITLE: MEM. CTLR. ROM AND PAL LISTINGS

SIZE	CODE	NUMBER	REV.
D	GL	M8391-0-0	A

G.M. HAFNER, [1106,1500]GLMC12.DPL, SCALE 2, "D" RELEASE BOX
G.M. HAFNER GLMC12.PLO[1106,1500] 27-OCT-81 18:31

HEX LOC	HEX DAT	BIN DAT	HEX LOC	HEX DAT	BIN DAT	HEX LOC	HEX DAT	BIN DAT	HEX LOC	HEX DAT	BIN DAT	HEX LOC	HEX DAT	BIN DAT	HEX LOC	HEX DAT	BIN DAT	HEX LOC	HEX DAT	BIN DAT	HEX LOC	HEX DAT	BIN DAT
000	00	00000000	040	0A	00001010	080	82	10000010	0C0	08	00001000	100	86	10000110	140	08	00001000	180	86	10000110	1C0	02	00000010
001	00	00000000	041	0B	00001011	081	08	00001000	0C1	8A	10001010	101	0A	00001010	141	0A	00001010	181	8A	10001010	1C1	02	00000010
002	00	00000000	042	0B	00001011	082	08	00001000	0C2	48	01001000	102	83	10000011	142	08	00001000	182	82	10000010	1C2	0A	00001010
003	00	00000000	043	0B	00001011	083	08	00001000	0C3	0A	00001010	103	0A	00001010	143	8A	10001010	183	8A	10001010	1C3	0A	00001010
004	00	00000000	044	8A	10001010	084	0C	00001100	0C4	8A	10001010	104	0A	00001010	144	08	00001000	184	7A	01111010	1C4	02	00000010
005	00	00000000	045	8A	10001010	085	08	00001000	0C5	0A	00001010	105	0A	00001010	145	0A	00001010	185	5A	01011010	1C5	02	00000010
006	00	00000000	046	0A	00001010	086	39	00111001	0C6	0A	00001010	106	0A	00001010	146	8A	10001010	186	8E	10001110	1C6	0A	00001010
007	AA	10101010	047	0A	00001010	087	0A	00001010	0C7	08	00001000	107	0A	00001010	147	0A	00001010	187	5A	01011010	1C7	39	00111001
008	8A	10001010	048	0A	00001010	088	8A	10001010	0C8	82	10000010	108	0A	00001010	148	0A	00001010	188	0A	00001010	1C8	02	00000010
009	82	10000010	049	0A	00001010	089	08	00001000	0C9	0A	00001010	109	0A	00001010	149	8A	10001010	189	0A	00001010	1C9	02	00000010
00A	8B	10001011	04A	0A	00001010	08A	08	00001000	0CA	82	10000010	10A	0A	00001010	14A	08	00001000	18A	0E	00001110	1CA	0A	00001010
00B	8A	10001010	04B	0A	00001010	08B	08	00001000	0CB	8E	10001110	10B	0A	00001010	14B	08	00001000	18B	0A	00001010	1CB	0A	00001010
00C	AA	10101010	04C	0A	00001010	08C	09	00001001	0CC	8A	10001010	10C	0A	00001010	14C	0E	00001110	18C	0A	00001010	1CC	E2	11100010
00D	8A	10001010	04D	02	00000010	08D	08	00001000	0CD	8A	10001010	10D	0A	00001010	14D	0E	00001110	18D	5A	01011010	1CD	E2	11100010
00E	82	10000010	04E	02	00000010	08E	0D	00001101	0CE	0A	00001010	10E	8A	10001010	14E	0A	00001010	18E	0A	00001010	1CE	0A	00001010
00F	8B	10001011	04F	0A	00001010	08F	08	00001000	0CF	0A	00001010	10F	0A	00001010	14F	88	10001000	18F	5A	01011010	1CF	0A	00001010
010	08	00001000	050	02	00000010	090	08	00001000	0D0	0A	00001010	110	0A	00001010	150	22	00100010	190	08	00001000	1D0	08	00001000
011	08	00001000	051	02	00000010	091	08	00001000	0D1	0A	00001010	111	8A	10001010	151	8A	10001010	191	0A	00001010	1D1	0A	00001010
012	08	00001000	052	8A	10001010	092	08	00001000	0D2	0A	00001010	112	0A	00001010	152	0A	00001010	192	08	00001000	1D2	0A	00001010
013	08	00001000	053	0A	00001010	093	08	00001000	0D3	0A	00001010	113	8A	10001010	153	8A	10001010	193	08	00001000	1D3	0A	00001010
014	08	00001000	054	0A	00001010	094	0A	00001010	0D4	0A	00001010	114	0A	00001010	154	08	00001000	194	7A	01111010	1D4	0A	00001010
015	08	00001000	055	0A	00001010	095	08	00001000	0D5	0A	00001010	115	8A	10001010	155	82	10000010	195	7A	01111010	1D5	0A	00001010
016	08	00001000	056	0B	00001011	096	08	00001000	0D6	0A	00001010	116	0A	00001010	156	8A	10001010	196	0A	00001010	1D6	0A	00001010
017	08	00001000	057	0A	00001010	097	08	00001000	0D7	0A	00001010	117	0A	00001010	157	82	10000010	197	8A	10001010	1D7	0B	00001011
018	08	00001000	058	02	00000010	098	08	00001000	0D8	0A	00001010	118	0A	00001010	158	0E	00001110	198	0A	00001010	1D8	08	00001000
019	08	00001000	059	0A	00001010	099	08	00001000	0D9	0A	00001010	119	82	10000010	159	0A	00001010	199	0A	00001010	1D9	08	00001000
01A	08	00001000	05A	0A	00001010	09A	08	00001000	0DA	0A	00001010	11A	0A	00001010	15A	06	00000110	19A	0A	00001010	1DA	08	00001000
01B	08	00001000	05B	0A	00001010	09B	08	00001000	0DB	0A	00001010	11B	82	10000010	15B	0A	00001010	19B	08	00001000	1DB	08	00001000
01C	0A	00001010	05C	0A	00001010	09C	08	00001000	0DC	02	00000010	11C	0A	00001010	15C	0A	00001010	19C	7E	01111110	1DC	08	00001000
01D	0A	00001010	05D	0A	00001010	09D	08	00001000	0DD	86	10000110	11D	0A	00001010	15D	08	00001000	19D	0A	00001010	1DD	08	00001000
01E	0A	00001010	05E	0A	00001010	09E	08	00001000	0DE	02	00000010	11E	8A	10001010	15E	0A	00001010	19E	8A	10001010	1DE	8A	10001010
01F	0A	00001010	05F	0A	00001010	09F	0A	00001010	0DF	82	10000010	11F	0A	00001010	15F	08	00001000	19F	68	01101000	1DF	08	00001000
020	0A	00001010	060	82	10000010	0A0	09	00001001	0E0	0A	00001010	120	0A	00001010	160	0A	00001010	1A0	0A	00001010	1E0	8A	10001010
021	0A	00001010	061	0A	00001010	0A1	0A	00001010	0E1	8A	10001010	121	8A	10001010	161	0A	00001010	1A1	0A	00001010	1E1	08	00001000
022	0A	00001010	062	0A	00001010	0A2	49	01001001	0E2	82	10000010	122	0A	00001010	162	08	00001000	1A2	0A	00001010	1E2	08	00001000
023	0A	00001010	063	0A	00001010	0A3	0A	00001010	0E3	8A	10001010	123	8A	10001010	163	0A	00001010	1A3	0A	00001010	1E3	08	00001000
024	02	00000010	064	0A	00001010	0A4	0A	00001010	0E4	8A	10001010	124	0A	00001010	164	58	01011000	1A4	7A	01111010	1E4	08	00001000
025	02	00000010	065	0A	00001010	0A5	0A	00001010	0E5	0A	00001010	125	8A	10001010	165	8A	10001010	1A5	7A	01111010	1E5	08	00001000
026	0E	00001110	066	0A	00001010	0A6	0A	00001010	0E6	0A	00001010	126	0A	00001010	166	0A	00001010	1A6	0A	00001010	1E6	8A	10001010
027	0A	00001010	067	82	10000010	0A7	0A	00001010	0E7	8A	10001010	127	08	00001000	167	0A	00001010	1A7	08	00001000	1E7	08	00001000
028	0A	00001010	068	0A	00001010	0A8	0A	00001010	0E8	8A	10001010	128	0A	00001010	168	08	00001000	1A8	0E	00001110	1E8	8A	10001010
029	0A	00001010	069	0A	00001010	0A9	5A	01011010	0E9	8B	10001011	129	08	00001000	169	08	00001000	1A9	0A	00001010	1E9	08	00001000
02A	0A	00001010	06A	0A	00001010	0AA	0A	00001010	0EA	0A	00001010	12A	0A	00001010	16A	08	00001000	1AA	0A	00001010	1EA	38	00111000
02B	0A	00001010	06B	0A	00001010	0AB	0A	00001010	0EB	8A	10001010	12B	08	00001000	16B	08	00001000	1AB	0A	00001010	1EB	08	00001000
02C	08	00001000	06C	0A	00001010	0AC	0A	00001010	0EC	8A	10001010	12C	0A	00001010	16C	58	01011000	1AC	FF	11111111	1EC	0A	00001010
02D	0A	00001010	06D	0A	00001010	0AD	0A	00001010	0ED	02	00000010	12D	08	00001000	16D	0A	00001010	1AD	0E	00001110	1ED	08	00001000
02E	08	00001000	06E	08	00001000	0AE	0A	00001010	0EE	0A	00001010	12E	8A	10001010	16E	0E	00001110	1AE	8A	10001010	1EE	0A	00001010
02F	58	01011000	06F	8A	10001010	0AF	0A	00001010	0EF	02	00000010	12F	08	00001000	16F	28	00101000	1AF	38	00111000	1EF	08	00001000
030	0A	00001010	070	0A	00001010	0B0	0A	00001010	0F0	0A	00001010	130	8A	10001010	170	08	00001000	1B0	8A	10001010	1F0	0A	00001010
031	0B	00001011	071	8A	10001010	0B1	0A	00001010	0F1	0A	00001010	131	09	00001001	171	08	00001000	1B1	08	00001000	1F1	0A	00001010
032	0A	00001010	072	8A	10001010	0B2	0A	00001010	0F2	0A	00001010	132	0A	00001010	172	08	00001000	1B2	08	00001000	1F2	48	01001000
033	0B	00001011	073	8A	10001010	0B3	0A	00001010	0F3	08	00001000	133	0D	00001101	173	08	00001000	1B3	0A	00001010	1F3	0A	00001010
034	0A	00001010	074	8A	10001010	0B4	0C	00001100	0F4	0A	00001010	134	0A	00001010	174	02	00000010	1B4	08	00001000	1F4	08	00001000
035	0B	00001011	075	8A	10001010	0B5	08	00001000	0F5	0A	00001010	135	09	00001001	175	08	00001000	1B5	08	00001000	1F5	0B	00001011
036	0A	00001010	076	8A	10001010	0B6	08	00001000	0F6	0A	00001010	136	0A	00001010	176	8A	10001010	1B6	8A	10001010	1F6	8A	10001010
037	00	00000000	077	8A	10001010	0B7	08	00001000	0F7	08	00001000	137	0D	00001101	177	08	00001000	1B7	08	00001000	1F7	39	00111001
038	02	00000010	078	82	10000010	0B8	08	00001000	0F8	08	00001000	138	8A	10001010	178	0A	00001010	1B8	0A	00001010	1F8	0E	00001110
039	0A	00001010	079	82	10000010	0B9	0A	00001010	0F9	0A	00001010	139	08	00001000	179	0A	00001010	1B9	08	00001000	1F9	8A	10001010
03A	00	00000000	07A	82	10000010	0BA	0A	00001010	0FA	0A	00001010	13A	0A	00001010	17A	0E	00001110	1BA	0A	00001010	1FA	9A	10011010
03B	02	00000010	07B	08	00001000	0BB	8E	10001110	0FB	0A	00001010	13B	08	00001000	17B	0A	00001010	1BB	08	00001000	1FB	9A	10011010
03C	0A	00001010	07C	0A	00001010	0BC	08	00001000	0FC	0A	00001010	13C	0A	00001010	17C	0C	00001100	1BC	08	00001000	1FC	38	00111000
03D	0A	00001010	07D	0A	00001010	0BD	08	00001000	0FD	0A	00001010	13D	08	00001000	17D	08	00001000	1BD	8A	10001010	1FD	39	00111001
03E	08	00001000	07E	8A	10001010	0BE	0A	00001010	0FE	0A	00001010	13E	8A	10001010	17E	8A	10001010	1BE	8A	10001010	1FE	0A	00001010
03F	8A	10001010	07F	08	00001000	0BF	0A	00001010	0FF	8E	10001110	13F	08	00001000	17F	0A	00001010	1BF	0A	00001010	1FF	39	00111001

PART NUMBER: 23-038D2-00
DEVICE TYPE:512 X 8
SCHEMATIC SHEET #:D-CS-M8391-0-MCTM
LOCATION/DESCRIPTION: E86 / UCODE<48:55>

LEFT COLUMN OF BIN DATA IS MSB
BINARY DATA "1" = HIGH
BINARY DATA "0" = LOW

THIS DRAWING AND SPECIFICATIONS, HEREIN, ARE THE PROPERTY OF DIGITAL EQUIPMENT CORPORATION AND SHALL NOT BE REPRODUCED OR COPIED OR USED IN WHOLE OR IN PART AS THE BASIS FOR THE MANUFACTURE OR SALE OF ITEMS WITHOUT WRITTEN PERMISSION. COPYRIGHT © 1981, DIGITAL EQUIPMENT CORPORATION

REVISIONS
CHK | CHANGE NO. | REV

digital
DRN. G M Hafner | DATE 27-OCT-81 | ENG. | DATE
CHK'D. | DATE | BOARD LOCATION: | SHEET 13 OF 16
DSK:GLMC13.T2P[1106,1500][27-OCT-81 18:26 | NEXT HIGHER ASSEMBLY: B-DD-M8391-0-0
FIRST USED ON OPTION/MODEL: 11/730

TITLE: MEM. CTLR. ROM AND PAL LISTINGS
SIZE D | CODE GL | NUMBER M8391-0-0 | REV. A

G.M. HAFNER, [1106,1500]GLMC13.DPL, SCALE 2, "D" RELEASE BOX
G.M. HAFNER GLMC13.PLO[1106,1500] 27-OCT-81 18:31

HEX LOC	HEX DAT	BIN DAT
000	00	00000000
001	00	00000000
002	00	00000000
003	00	00000000
004	00	00000000
005	00	00000000
006	00	00000000
007	E2	11100010
008	EA	11101010
009	62	01100010
00A	E2	11100010
00B	E2	11100010
00C	E2	11100010
00D	E2	11100010
00E	62	01100010
00F	E2	11100010
010	E2	11100010
011	62	01100010
012	E2	11100010
013	E2	11100010
014	62	01100010
015	62	01100010
016	62	01100010
017	62	01100010
018	62	01100010
019	E2	11100010
01A	62	01100010
01B	62	01100010
01C	E2	11100010
01D	E2	11100010
01E	E2	11100010
01F	E2	11100010
020	E2	11100010
021	62	01100010
022	E2	11100010
023	E2	11100010
024	E2	11100010
025	62	01100010
026	E2	11100010
027	E2	11100010
028	E2	11100010
029	E2	11100010
02A	E2	11100010
02B	62	01100010
02C	E2	11100010
02D	E2	11100010
02E	E2	11100010
02F	62	01100010
030	E2	11100010
031	E2	11100010
032	A2	10100010
033	E2	11100010
034	E2	11100010
035	A2	10100010
036	E2	11100010
037	E3	11100011
038	23	00100011
039	A3	10100011
03A	E2	11100010
03B	22	00100010
03C	A3	10100011
03D	E2	11100010
03E	E2	11100010
03F	E2	11100010

HEX LOC	HEX DAT	BIN DAT
040	E3	11100011
041	E2	11100010
042	E2	11100010
043	62	01100010
044	E2	11100010
045	E2	11100010
046	E2	11100010
047	E2	11100010
048	E2	11100010
049	62	01100010
04A	62	01100010
04B	E2	11100010
04C	E2	11100010
04D	E2	11100010
04E	62	01100010
04F	E2	11100010
050	E2	11100010
051	E2	11100010
052	E2	11100010
053	E2	11100010
054	E2	11100010
055	E2	11100010
056	62	01100010
057	E2	11100010
058	E2	11100010
059	E2	11100010
05A	E2	11100010
05B	E2	11100010
05C	E2	11100010
05D	E2	11100010
05E	E2	11100010
05F	62	01100010
060	E3	11100011
061	E2	11100010
062	E2	11100010
063	E2	11100010
064	E6	11100110
065	E2	11100010
066	E2	11100010
067	62	01100010
068	E2	11100010
069	E2	11100010
06A	E2	11100010
06B	A2	10100010
06C	E2	11100010
06D	82	10000010
06E	92	10010010
06F	E2	11100010
070	F3	11110011
071	E2	11100010
072	E2	11100010
073	E2	11100010
074	F2	11110010
075	E2	11100010
076	E2	11100010
077	E2	11100010
078	62	01100010
079	62	01100010
07A	62	01100010
07B	E2	11100010
07C	E2	11100010
07D	E2	11100010
07E	E2	11100010
07F	62	01100010

HEX LOC	HEX DAT	BIN DAT
080	62	01100010
081	E2	11100010
082	62	01100010
083	E2	11100010
084	E2	11100010
085	E2	11100010
086	63	01100011
087	E2	11100010
088	E2	11100010
089	E2	11100010
08A	62	01100010
08B	E2	11100010
08C	E2	11100010
08D	62	01100010
08E	E2	11100010
08F	E2	11100010
090	E2	11100010
091	E2	11100010
092	E2	11100010
093	E2	11100010
094	E2	11100010
095	E2	11100010
096	62	01100010
097	E2	11100010
098	E2	11100010
099	E2	11100010
09A	E2	11100010
09B	E2	11100010
09C	E2	11100010
09D	E2	11100010
09E	E2	11100010
09F	E2	11100010
0A0	62	01100010
0A1	62	01100010
0A2	62	01100010
0A3	E2	11100010
0A4	E2	11100010
0A5	62	01100010
0A6	E2	11100010
0A7	E2	11100010
0A8	E2	11100010
0A9	62	01100010
0AA	E2	11100010
0AB	62	01100010
0AC	E2	11100010
0AD	62	01100010
0AE	E2	11100010
0AF	62	01100010
0B0	E2	11100010
0B1	E2	11100010
0B2	E2	11100010
0B3	E2	11100010
0B4	E2	11100010
0B5	62	01100010
0B6	62	01100010
0B7	62	01100010
0B8	E2	11100010
0B9	E2	11100010
0BA	E2	11100010
0BB	E2	11100010
0BC	E2	11100010
0BD	62	01100010
0BE	E2	11100010
0BF	E2	11100010

HEX LOC	HEX DAT	BIN DAT
0C0	62	01100010
0C1	E6	11100110
0C2	62	01100010
0C3	A2	10100010
0C4	E6	11100110
0C5	E3	11100011
0C6	A2	10100010
0C7	E2	11100010
0C8	63	01100011
0C9	E2	11100010
0CA	62	01100010
0CB	EB	11101011
0CC	E2	11100010
0CD	E2	11100010
0CE	E2	11100010
0CF	E2	11100010
0D0	62	01100010
0D1	E2	11100010
0D2	E2	11100010
0D3	E2	11100010
0D4	62	01100010
0D5	E2	11100010
0D6	E2	11100010
0D7	E2	11100010
0D8	E2	11100010
0D9	E2	11100010
0DA	E2	11100010
0DB	E2	11100010
0DC	E2	11100010
0DD	E2	11100010
0DE	E2	11100010
0DF	62	01100010
0E0	62	01100010
0E1	E2	11100010
0E2	62	01100010
0E3	62	01100010
0E4	62	01100010
0E5	E2	11100010
0E6	E2	11100010
0E7	62	01100010
0E8	E6	11100110
0E9	E2	11100010
0EA	E2	11100010
0EB	E2	11100010
0EC	E6	11100110
0ED	E2	11100010
0EE	E2	11100010
0EF	E2	11100010
0F0	E2	11100010
0F1	E2	11100010
0F2	E2	11100010
0F3	E2	11100010
0F4	E2	11100010
0F5	E2	11100010
0F6	E2	11100010
0F7	E2	11100010
0F8	E2	11100010
0F9	E2	11100010
0FA	E2	11100010
0FB	E2	11100010
0FC	E2	11100010
0FD	E2	11100010
0FE	62	01100010
0FF	EE	11101110

HEX LOC	HEX DAT	BIN DAT
100	62	01100010
101	E2	11100010
102	62	01100010
103	E2	11100010
104	EA	11101010
105	E2	11100010
106	E2	11100010
107	E2	11100010
108	E2	11100010
109	E6	11100110
10A	E2	11100010
10B	E2	11100010
10C	E2	11100010
10D	E2	11100010
10E	E2	11100010
10F	E3	11100011
110	E2	11100010
111	E2	11100010
112	62	01100010
113	E2	11100010
114	E6	11100110
115	E2	11100010
116	E2	11100010
117	E2	11100010
118	E6	11100110
119	62	01100010
11A	E2	11100010
11B	62	01100010
11C	E2	11100010
11D	E2	11100010
11E	E2	11100010
11F	E2	11100010
120	E2	11100010
121	E2	11100010
122	E2	11100010
123	E2	11100010
124	E2	11100010
125	E2	11100010
126	E2	11100010
127	E2	11100010
128	E2	11100010
129	E2	11100010
12A	E2	11100010
12B	E2	11100010
12C	E2	11100010
12D	E2	11100010
12E	E2	11100010
12F	E2	11100010
130	E6	11100110
131	E2	11100010
132	E2	11100010
133	E2	11100010
134	E2	11100010
135	E2	11100010
136	E2	11100010
137	E2	11100010
138	E6	11100110
139	E2	11100010
13A	82	10000010
13B	E2	11100010
13C	E2	11100010
13D	E2	11100010
13E	E2	11100010
13F	E2	11100010

HEX LOC	HEX DAT	BIN DAT
140	91	10010001
141	E2	11100010
142	90	10010000
143	E6	11100110
144	62	01100010
145	E2	11100010
146	E2	11100010
147	E2	11100010
148	E2	11100010
149	E6	11100110
14A	E2	11100010
14B	92	10010010
14C	E6	11100110
14D	E2	11100010
14E	E3	11100011
14F	96	10010110
150	62	01100010
151	E6	11100110
152	E2	11100010
153	E6	11100110
154	E2	11100010
155	72	01110010
156	E3	11100011
157	F2	11110010
158	E2	11100010
159	E2	11100010
15A	62	01100010
15B	E2	11100010
15C	E2	11100010
15D	E2	11100010
15E	A2	10100010
15F	E2	11100010
160	E2	11100010
161	E2	11100010
162	E2	11100010
163	E2	11100010
164	62	01100010
165	E6	11100110
166	C2	11000010
167	E2	11100010
168	E2	11100010
169	E2	11100010
16A	E2	11100010
16B	E2	11100010
16C	62	01100010
16D	E2	11100010
16E	C2	11000010
16F	E2	11100010
170	E2	11100010
171	E2	11100010
172	E2	11100010
173	E2	11100010
174	62	01100010
175	E2	11100010
176	FA	11111010
177	E2	11100010
178	E2	11100010
179	E2	11100010
17A	EA	11101010
17B	E2	11100010
17C	E2	11100010
17D	E2	11100010
17E	E2	11100010
17F	E2	11100010

HEX LOC	HEX DAT	BIN DAT
180	62	01100010
181	E2	11100010
182	62	01100010
183	E2	11100010
184	E2	11100010
185	E2	11100010
186	FA	11111010
187	E2	11100010
188	E2	11100010
189	E2	11100010
18A	EA	11101010
18B	E2	11100010
18C	EA	11101010
18D	E2	11100010
18E	EA	11101010
18F	E2	11100010
190	E2	11100010
191	E2	11100010
192	E2	11100010
193	E2	11100010
194	E2	11100010
195	E2	11100010
196	E2	11100010
197	E6	11100110
198	E2	11100010
199	E2	11100010
19A	E2	11100010
19B	E2	11100010
19C	E2	11100010
19D	EA	11101010
19E	E2	11100010
19F	E2	11100010
1A0	E2	11100010
1A1	E2	11100010
1A2	E2	11100010
1A3	E2	11100010
1A4	E2	11100010
1A5	E2	11100010
1A6	E2	11100010
1A7	63	01100011
1A8	E6	11100110
1A9	A2	10100010
1AA	E2	11100010
1AB	E2	11100010
1AC	E2	11100010
1AD	E2	11100010
1AE	E2	11100010
1AF	63	01100011
1B0	E6	11100110
1B1	E2	11100010
1B2	E2	11100010
1B3	E2	11100010
1B4	62	01100010
1B5	62	01100010
1B6	E2	11100010
1B7	E2	11100010
1B8	E2	11100010
1B9	E2	11100010
1BA	E2	11100010
1BB	E2	11100010
1BC	62	01100010
1BD	E6	11100110
1BE	E2	11100010
1BF	E2	11100010

HEX LOC	HEX DAT	BIN DAT
1C0	62	01100010
1C1	62	01100010
1C2	E2	11100010
1C3	E2	11100010
1C4	62	01100010
1C5	62	01100010
1C6	E3	11100011
1C7	63	01100011
1C8	62	01100010
1C9	62	01100010
1CA	E2	11100010
1CB	E2	11100010
1CC	62	01100010
1CD	62	01100010
1CE	E3	11100011
1CF	E2	11100010
1D0	E2	11100010
1D1	EB	11101011
1D2	E2	11100010
1D3	E3	11100011
1D4	EA	11101010
1D5	E2	11100010
1D6	E2	11100010
1D7	E2	11100010
1D8	E2	11100010
1D9	E2	11100010
1DA	E2	11100010
1DB	E2	11100010
1DC	E2	11100010
1DD	E2	11100010
1DE	E2	11100010
1DF	E2	11100010
1E0	E6	11100110
1E1	62	01100010
1E2	62	01100010
1E3	E2	11100010
1E4	E2	11100010
1E5	E2	11100010
1E6	E2	11100010
1E7	62	01100010
1E8	E2	11100010
1E9	E2	11100010
1EA	62	01100010
1EB	E2	11100010
1EC	E2	11100010
1ED	EA	11101010
1EE	E2	11100010
1EF	E2	11100010
1F0	E2	11100010
1F1	E2	11100010
1F2	E2	11100010
1F3	E2	11100010
1F4	62	01100010
1F5	E2	11100010
1F6	FA	11111010
1F7	62	01100010
1F8	E2	11100010
1F9	E6	11100110
1FA	E2	11100010
1FB	E2	11100010
1FC	62	01100010
1FD	62	01100010
1FE	EA	11101010
1FF	62	01100010

PART NUMBER: 23-039D2-00
DEVICE TYPE:512 X 8
SCHEMATIC SHEET #:D-CS-M8391-0-MCTM
LOCATION/DESCRIPTION: E73 / UCODE<56:63>

LEFT COLUMN OF BIN DATA IS MSB
BINARY DATA "1" = HIGH
BINARY DATA "0" = LOW

THIS DRAWING AND SPECIFICATIONS, HEREIN, ARE THE PROPERTY OF DIGITAL EQUIPMENT CORPORATION AND SHALL NOT BE REPRODUCED OR COPIED OR USED IN WHOLE OR IN PART AS THE BASIS FOR THE MANUFACTURE OR SALE OF ITEMS WITHOUT WRITTEN PERMISSION. COPYRIGHT © 1981, DIGITAL EQUIPMENT CORPORATION

REVISIONS | CHK | CHANGE NO. | REV

digital | DRN. D M Hafner | DATE 27-OCT-81 | CHK'D. | DATE | ENG. | DATE
BOARD LOCATION:
SHEET 14 OF 16
DSK:GLMC14,T2P[1106,1500] 27-OCT-81 18:26
NEXT HIGHER ASSEMBLY: B-DD-M8391-0-0
FIRST USED ON OPTION/MODEL: 11/730
TITLE: MEM. CTLR. ROM AND PAL LISTINGS
SIZE D | CODE GL | NUMBER M8391-0-0 | REV. A

G.M. HAFNER, [1106,1500]GLMC14.DPL, SCALE 2, "D" RELEASE BOX
G.M. HAFNER GLMC14.PLO[1106,1500] 27-OCT-81 18:31

HEX LOC	HEX DAT	BIN DAT
000	00	00000000
001	00	00000000
002	00	00000000
003	00	00000000
004	00	00000000
005	00	00000000
006	00	00000000
007	43	01000011
008	C3	11000011
009	43	01000011
00A	43	01000011
00B	43	01000011
00C	43	01000011
00D	43	01000011
00E	43	01000011
00F	43	01000011
010	43	01000011
011	43	01000011
012	43	01000011
013	43	01000011
014	43	01000011
015	43	01000011
016	43	01000011
017	43	01000011
018	43	01000011
019	43	01000011
01A	43	01000011
01B	43	01000011
01C	43	01000011
01D	43	01000011
01E	43	01000011
01F	43	01000011
020	43	01000011
021	43	01000011
022	43	01000011
023	43	01000011
024	43	01000011
025	43	01000011
026	03	00000011
027	03	00000011
028	43	01000011
029	43	01000011
02A	43	01000011
02B	43	01000011
02C	43	01000011
02D	43	01000011
02E	41	01000001
02F	41	01000001
030	43	01000011
031	43	01000011
032	43	01000011
033	43	01000011
034	43	01000011
035	43	01000011
036	43	01000011
037	43	01000011
038	43	01000011
039	43	01000011
03A	43	01000011
03B	43	01000011
03C	43	01000011
03D	53	01010011
03E	50	01010000
03F	53	01010011

HEX LOC	HEX DAT	BIN DAT
040	43	01000011
041	C3	11000011
042	C3	11000011
043	43	01000011
044	43	01000011
045	43	01000011
046	43	01000011
047	43	01000011
048	43	01000011
049	43	01000011
04A	43	01000011
04B	43	01000011
04C	43	01000011
04D	43	01000011
04E	43	01000011
04F	43	01000011
050	43	01000011
051	43	01000011
052	43	01000011
053	43	01000011
054	43	01000011
055	43	01000011
056	43	01000011
057	43	01000011
058	43	01000011
059	43	01000011
05A	43	01000011
05B	43	01000011
05C	43	01000011
05D	43	01000011
05E	43	01000011
05F	43	01000011
060	43	01000011
061	43	01000011
062	43	01000011
063	43	01000011
064	52	01010010
065	43	01000011
066	52	01010010
067	43	01000011
068	5E	01011110
069	03	00000011
06A	51	01010001
06B	71	01110001
06C	52	01010010
06D	43	01000011
06E	43	01000011
06F	43	01000011
070	43	01000011
071	43	01000011
072	43	01000011
073	43	01000011
074	43	01000011
075	43	01000011
076	43	01000011
077	43	01000011
078	43	01000011
079	43	01000011
07A	43	01000011
07B	43	01000011
07C	43	01000011
07D	43	01000011
07E	43	01000011
07F	43	01000011

HEX LOC	HEX DAT	BIN DAT
080	43	01000011
081	43	01000011
082	43	01000011
083	43	01000011
084	43	01000011
085	43	01000011
086	43	01000011
087	43	01000011
088	43	01000011
089	43	01000011
08A	43	01000011
08B	43	01000011
08C	43	01000011
08D	43	01000011
08E	43	01000011
08F	43	01000011
090	43	01000011
091	43	01000011
092	43	01000011
093	43	01000011
094	43	01000011
095	43	01000011
096	43	01000011
097	43	01000011
098	43	01000011
099	43	01000011
09A	43	01000011
09B	43	01000011
09C	43	01000011
09D	43	01000011
09E	43	01000011
09F	43	01000011
0A0	43	01000011
0A1	43	01000011
0A2	43	01000011
0A3	43	01000011
0A4	43	01000011
0A5	43	01000011
0A6	43	01000011
0A7	43	01000011
0A8	43	01000011
0A9	43	01000011
0AA	43	01000011
0AB	43	01000011
0AC	43	01000011
0AD	43	01000011
0AE	43	01000011
0AF	43	01000011
0B0	43	01000011
0B1	43	01000011
0B2	43	01000011
0B3	43	01000011
0B4	43	01000011
0B5	43	01000011
0B6	43	01000011
0B7	41	01000001
0B8	41	01000001
0B9	43	01000011
0BA	23	00100011
0BB	43	01000011
0BC	45	01000101
0BD	41	01000001
0BE	43	01000011
0BF	43	01000011

HEX LOC	HEX DAT	BIN DAT
0C0	43	01000011
0C1	43	01000011
0C2	43	01000011
0C3	43	01000011
0C4	43	01000011
0C5	52	01010010
0C6	43	01000011
0C7	50	01010000
0C8	53	01010011
0C9	43	01000011
0CA	53	01010011
0CB	53	01010011
0CC	53	01010011
0CD	53	01010011
0CE	43	01000011
0CF	43	01000011
0D0	43	01000011
0D1	43	01000011
0D2	43	01000011
0D3	43	01000011
0D4	43	01000011
0D5	43	01000011
0D6	43	01000011
0D7	43	01000011
0D8	43	01000011
0D9	43	01000011
0DA	43	01000011
0DB	43	01000011
0DC	43	01000011
0DD	43	01000011
0DE	43	01000011
0DF	43	01000011
0E0	43	01000011
0E1	43	01000011
0E2	43	01000011
0E3	43	01000011
0E4	43	01000011
0E5	43	01000011
0E6	43	01000011
0E7	43	01000011
0E8	43	01000011
0E9	43	01000011
0EA	43	01000011
0EB	43	01000011
0EC	43	01000011
0ED	43	01000011
0EE	43	01000011
0EF	43	01000011
0F0	43	01000011
0F1	43	01000011
0F2	43	01000011
0F3	43	01000011
0F4	43	01000011
0F5	43	01000011
0F6	43	01000011
0F7	43	01000011
0F8	43	01000011
0F9	43	01000011
0FA	43	01000011
0FB	43	01000011
0FC	43	01000011
0FD	43	01000011
0FE	43	01000011
0FF	C3	11000011

HEX LOC	HEX DAT	BIN DAT
100	43	01000011
101	43	01000011
102	43	01000011
103	43	01000011
104	53	01010011
105	43	01000011
106	50	01010000
107	43	01000011
108	53	01010011
109	52	01010010
10A	43	01000011
10B	43	01000011
10C	52	01010010
10D	52	01010010
10E	43	01000011
10F	32	00110010
110	53	01010011
111	43	01000011
112	47	01000111
113	43	01000011
114	52	01010010
115	43	01000011
116	43	01000011
117	43	01000011
118	52	01010010
119	43	01000011
11A	43	01000011
11B	43	01000011
11C	43	01000011
11D	43	01000011
11E	C3	11000011
11F	43	01000011
120	43	01000011
121	43	01000011
122	43	01000011
123	43	01000011
124	47	01000111
125	43	01000011
126	43	01000011
127	43	01000011
128	52	01010010
129	43	01000011
12A	52	01010010
12B	43	01000011
12C	43	01000011
12D	43	01000011
12E	43	01000011
12F	43	01000011
130	43	01000011
131	43	01000011
132	03	00000011
133	43	01000011
134	43	01000011
135	43	01000011
136	C3	11000011
137	43	01000011
138	43	01000011
139	43	01000011
13A	43	01000011
13B	43	01000011
13C	43	01000011
13D	43	01000011
13E	43	01000011
13F	43	01000011

HEX LOC	HEX DAT	BIN DAT
140	43	01000011
141	43	01000011
142	43	01000011
143	43	01000011
144	43	01000011
145	43	01000011
146	43	01000011
147	43	01000011
148	43	01000011
149	43	01000011
14A	43	01000011
14B	43	01000011
14C	43	01000011
14D	43	01000011
14E	43	01000011
14F	43	01000011
150	03	00000011
151	43	01000011
152	43	01000011
153	43	01000011
154	43	01000011
155	43	01000011
156	43	01000011
157	43	01000011
158	43	01000011
159	43	01000011
15A	23	00100011
15B	43	01000011
15C	43	01000011
15D	43	01000011
15E	43	01000011
15F	43	01000011
160	43	01000011
161	43	01000011
162	43	01000011
163	07	00000111
164	41	01000001
165	43	01000011
166	43	01000011
167	03	00000011
168	50	01010000
169	50	01010000
16A	58	01011000
16B	50	01010000
16C	43	01000011
16D	43	01000011
16E	43	01000011
16F	43	01000011
170	50	01010000
171	50	01010000
172	58	01011000
173	58	01011000
174	13	00010011
175	53	01010011
176	43	01000011
177	45	01000101
178	43	01000011
179	43	01000011
17A	43	01000011
17B	43	01000011
17C	43	01000011
17D	43	01000011
17E	43	01000011
17F	43	01000011

HEX LOC	HEX DAT	BIN DAT
180	43	01000011
181	43	01000011
182	43	01000011
183	43	01000011
184	63	01100011
185	43	01000011
186	43	01000011
187	43	01000011
188	43	01000011
189	43	01000011
18A	43	01000011
18B	43	01000011
18C	63	01100011
18D	43	01000011
18E	43	01000011
18F	43	01000011
190	43	01000011
191	43	01000011
192	43	01000011
193	43	01000011
194	63	01100011
195	63	01100011
196	43	01000011
197	43	01000011
198	43	01000011
199	43	01000011
19A	43	01000011
19B	43	01000011
19C	63	01100011
19D	43	01000011
19E	43	01000011
19F	43	01000011
1A0	43	01000011
1A1	43	01000011
1A2	43	01000011
1A3	43	01000011
1A4	63	01100011
1A5	63	01100011
1A6	43	01000011
1A7	43	01000011
1A8	52	01010010
1A9	71	01110001
1AA	5E	01011110
1AB	52	01010010
1AC	63	01100011
1AD	63	01100011
1AE	43	01000011
1AF	43	01000011
1B0	43	01000011
1B1	43	01000011
1B2	43	01000011
1B3	43	01000011
1B4	43	01000011
1B5	43	01000011
1B6	43	01000011
1B7	43	01000011
1B8	43	01000011
1B9	43	01000011
1BA	43	01000011
1BB	43	01000011
1BC	43	01000011
1BD	43	01000011
1BE	43	01000011
1BF	43	01000011

HEX LOC	HEX DAT	BIN DAT
1C0	12	00010010
1C1	12	00010010
1C2	3A	00111010
1C3	52	01010010
1C4	43	01000011
1C5	43	01000011
1C6	43	01000011
1C7	43	01000011
1C8	12	00010010
1C9	12	00010010
1CA	3A	00111010
1CB	3A	00111010
1CC	43	01000011
1CD	43	01000011
1CE	43	01000011
1CF	43	01000011
1D0	43	01000011
1D1	53	01010011
1D2	43	01000011
1D3	32	00110010
1D4	43	01000011
1D5	43	01000011
1D6	43	01000011
1D7	C3	11000011
1D8	43	01000011
1D9	43	01000011
1DA	43	01000011
1DB	43	01000011
1DC	43	01000011
1DD	43	01000011
1DE	43	01000011
1DF	43	01000011
1E0	43	01000011
1E1	43	01000011
1E2	43	01000011
1E3	43	01000011
1E4	43	01000011
1E5	43	01000011
1E6	43	01000011
1E7	43	01000011
1E8	53	01010011
1E9	43	01000011
1EA	43	01000011
1EB	43	01000011
1EC	43	01000011
1ED	43	01000011
1EE	43	01000011
1EF	43	01000011
1F0	43	01000011
1F1	43	01000011
1F2	43	01000011
1F3	43	01000011
1F4	43	01000011
1F5	43	01000011
1F6	43	01000011
1F7	43	01000011
1F8	63	01100011
1F9	43	01000011
1FA	43	01000011
1FB	43	01000011
1FC	43	01000011
1FD	43	01000011
1FE	43	01000011
1FF	43	01000011

PART NUMBER: 23-040D2-00
DEVICE TYPE:512 X 8
SCHEMATIC SHEET #:D-CS-M8391-0-MCTM
LOCATION/DESCRIPTION: E111 / UCODE<64:71>

LEFT COLUMN OF BIN DATA IS MSB
BINARY DATA "1" = HIGH
BINARY DATA "0" = LOW

THIS DRAWING AND SPECIFICATIONS, HEREIN, ARE THE PROPERTY OF DIGITAL EQUIPMENT CORPORATION AND SHALL NOT BE REPRODUCED OR COPIED OR USED IN WHOLE OR IN PART AS THE BASIS FOR THE MANUFACTURE OR SALE OF ITEMS WITHOUT WRITTEN PERMISSION. COPYRIGHT © 1981, DIGITAL EQUIPMENT CORPORATION

REVISIONS | CHK | CHANGE NO. | REV

digital | DRN. D M Hafner | DATE 27-OCT-81 | ENG. | DATE
CHK'D. | DATE | BOARD LOCATION: | SHEET 15 OF 16
DSK:GLMC15.T2P[1106,1500][27-OCT-81 18:27 | NEXT HIGHER ASSEMBLY: B-DD-M8391-0-0
FIRST USED ON OPTION/MODEL: 11/730

TITLE: MEM. CTLR. ROM AND PAL LISTINGS

SIZE D | CODE GL | NUMBER M8391-0-0 | REV. A

G.M. HAFNER, [1106,1500]GLMC15.DPL, SCALE 2, "D" RELEASE BOX
G.M. HAFNER GLMC15.PLO[1106,1500] 27-OCT-81 18:32

HEX LOC	HEX DAT	BIN DAT	HEX LOC	HEX DAT	BIN DAT	HEX LOC	HEX DAT	BIN DAT	HEX LOC	HEX DAT	BIN DAT	HEX LOC	HEX DAT	BIN DAT	HEX LOC	HEX DAT	BIN DAT	HEX LOC	HEX DAT	BIN DAT	HEX LOC	HEX DAT	BIN DAT
000	E	1110	040	6	0110	080	6	0110	0C0	E	1110	100	6	0110	140	E	1110	180	E	1110	1C0	6	0110
001	E	1110	041	6	0110	081	6	0110	0C1	E	1110	101	6	0110	141	E	1110	181	E	1110	1C1	6	0110
002	E	1110	042	6	0110	082	6	0110	0C2	E	1110	102	6	0110	142	E	1110	182	E	1110	1C2	6	0110
003	E	1110	043	6	0110	083	6	0110	0C3	E	1110	103	6	0110	143	E	1110	183	E	1110	1C3	6	0110
004	A	1010	044	6	0110	084	6	0110	0C4	E	1110	104	2	0010	144	E	1110	184	E	1110	1C4	6	0110
005	A	1010	045	6	0110	085	2	0010	0C5	A	1010	105	2	0010	145	A	1010	185	A	1010	1C5	2	0010
006	A	1010	046	6	0110	086	2	0010	0C6	E	1110	106	2	0010	146	E	1110	186	A	1010	1C6	6	0110
007	A	1010	047	6	0110	087	2	0010	0C7	A	1010	107	2	0010	147	A	1010	187	A	1010	1C7	2	0010
008	A	1010	048	4	0100	088	4	0100	0C8	C	1100	108	2	0010	148	C	1100	188	A	1010	1C8	2	0010
009	A	1010	049	4	0100	089	2	0010	0C9	A	1010	109	2	0010	149	A	1010	189	A	1010	1C9	2	0010
00A	A	1010	04A	4	0100	08A	2	0010	0CA	A	1010	10A	2	0010	14A	C	1100	18A	A	1010	1CA	2	0010
00B	A	1010	04B	4	0100	08B	2	0010	0CB	A	1010	10B	2	0010	14B	A	1010	18B	A	1010	1CB	2	0010
00C	E	1110	04C	6	0110	08C	6	0110	0CC	E	1110	10C	6	0110	14C	E	1110	18C	E	1110	1CC	6	0110
00D	E	1110	04D	6	0110	08D	6	0110	0CD	E	1110	10D	6	0110	14D	E	1110	18D	E	1110	1CD	6	0110
00E	E	1110	04E	6	0110	08E	6	0110	0CE	E	1110	10E	6	0110	14E	E	1110	18E	E	1110	1CE	6	0110
00F	E	1110	04F	6	0110	08F	6	0110	0CF	E	1110	10F	6	0110	14F	E	1110	18F	E	1110	1CF	6	0110
010	6	0110	050	E	1110	090	E	1110	0D0	6	0110	110	E	1110	150	6	0110	190	6	0110	1D0	E	1110
011	6	0110	051	E	1110	091	E	1110	0D1	6	0110	111	E	1110	151	6	0110	191	6	0110	1D1	E	1110
012	6	0110	052	E	1110	092	E	1110	0D2	6	0110	112	E	1110	152	6	0110	192	6	0110	1D2	E	1110
013	6	0110	053	E	1110	093	E	1110	0D3	6	0110	113	E	1110	153	6	0110	193	6	0110	1D3	E	1110
014	2	0010	054	E	1110	094	E	1110	0D4	6	0110	114	A	1010	154	6	0110	194	6	0110	1D4	E	1110
015	2	0010	055	E	1110	095	A	1010	0D5	2	0010	115	A	1010	155	2	0010	195	2	0010	1D5	A	1010
016	2	0010	056	E	1110	096	A	1010	0D6	6	0110	116	A	1010	156	6	0110	196	2	0010	1D6	E	1110
017	2	0010	057	E	1110	097	A	1010	0D7	2	0010	117	A	1010	157	2	0010	197	2	0010	1D7	A	1010
018	2	0010	058	E	1110	098	E	1110	0D8	6	0110	118	A	1010	158	6	0110	198	2	0010	1D8	A	1010
019	2	0010	059	E	1110	099	A	1010	0D9	2	0010	119	A	1010	159	2	0010	199	2	0010	1D9	A	1010
01A	2	0010	05A	E	1110	09A	A	1010	0DA	2	0010	11A	A	1010	15A	6	0110	19A	2	0010	1DA	A	1010
01B	2	0010	05B	E	1110	09B	A	1010	0DB	2	0010	11B	A	1010	15B	2	0010	19B	2	0010	1DB	A	1010
01C	6	0110	05C	E	1110	09C	E	1110	0DC	6	0110	11C	E	1110	15C	6	0110	19C	6	0110	1DC	E	1110
01D	6	0110	05D	E	1110	09D	E	1110	0DD	6	0110	11D	E	1110	15D	6	0110	19D	6	0110	1DD	E	1110
01E	6	0110	05E	E	1110	09E	E	1110	0DE	6	0110	11E	E	1110	15E	6	0110	19E	6	0110	1DE	E	1110
01F	6	0110	05F	E	1110	09F	E	1110	0DF	6	0110	11F	E	1110	15F	6	0110	19F	6	0110	1DF	E	1110
020	6	0110	060	E	1110	0A0	E	1110	0E0	6	0110	120	E	1110	160	6	0110	1A0	6	0110	1E0	E	1110
021	6	0110	061	E	1110	0A1	E	1110	0E1	6	0110	121	E	1110	161	6	0110	1A1	6	0110	1E1	E	1110
022	6	0110	062	E	1110	0A2	E	1110	0E2	6	0110	122	E	1110	162	6	0110	1A2	6	0110	1E2	E	1110
023	6	0110	063	E	1110	0A3	E	1110	0E3	6	0110	123	E	1110	163	6	0110	1A3	6	0110	1E3	E	1110
024	6	0110	064	E	1110	0A4	E	1110	0E4	6	0110	124	E	1110	164	6	0110	1A4	6	0110	1E4	E	1110
025	6	0110	065	E	1110	0A5	E	1110	0E5	6	0110	125	E	1110	165	6	0110	1A5	6	0110	1E5	E	1110
026	6	0110	066	E	1110	0A6	E	1110	0E6	6	0110	126	E	1110	166	6	0110	1A6	6	0110	1E6	E	1110
027	2	0010	067	E	1110	0A7	A	1010	0E7	6	0110	127	A	1010	167	6	0110	1A7	2	0010	1E7	E	1110
028	4	0100	068	C	1100	0A8	C	1100	0E8	4	0100	128	C	1100	168	4	0100	1A8	2	0010	1E8	A	1010
029	4	0100	069	C	1100	0A9	A	1010	0E9	2	0010	129	A	1010	169	2	0010	1A9	2	0010	1E9	A	1010
02A	4	0100	06A	C	1100	0AA	A	1010	0EA	2	0010	12A	C	1100	16A	4	0100	1AA	2	0010	1EA	A	1010
02B	2	0010	06B	A	1010	0AB	A	1010	0EB	2	0010	12B	A	1010	16B	2	0010	1AB	2	0010	1EB	A	1010
02C	6	0110	06C	E	1110	0AC	E	1110	0EC	6	0110	12C	E	1110	16C	6	0110	1AC	6	0110	1EC	E	1110
02D	6	0110	06D	E	1110	0AD	E	1110	0ED	6	0110	12D	E	1110	16D	6	0110	1AD	6	0110	1ED	E	1110
02E	6	0110	06E	E	1110	0AE	E	1110	0EE	6	0110	12E	E	1110	16E	6	0110	1AE	6	0110	1EE	E	1110
02F	6	0110	06F	E	1110	0AF	E	1110	0EF	6	0110	12F	E	1110	16F	6	0110	1AF	6	0110	1EF	E	1110
030	E	1110	070	6	0110	0B0	6	0110	0F0	E	1110	130	6	0110	170	E	1110	1B0	E	1110	1F0	6	0110
031	E	1110	071	6	0110	0B1	6	0110	0F1	E	1110	131	6	0110	171	E	1110	1B1	E	1110	1F1	6	0110
032	E	1110	072	6	0110	0B2	6	0110	0F2	E	1110	132	6	0110	172	E	1110	1B2	E	1110	1F2	6	0110
033	E	1110	073	6	0110	0B3	6	0110	0F3	E	1110	133	6	0110	173	E	1110	1B3	E	1110	1F3	6	0110
034	E	1110	074	6	0110	0B4	6	0110	0F4	E	1110	134	6	0110	174	E	1110	1B4	E	1110	1F4	6	0110
035	E	1110	075	6	0110	0B5	6	0110	0F5	E	1110	135	6	0110	175	E	1110	1B5	E	1110	1F5	6	0110
036	E	1110	076	6	0110	0B6	6	0110	0F6	E	1110	136	6	0110	176	E	1110	1B6	E	1110	1F6	6	0110
037	A	1010	077	6	0110	0B7	2	0010	0F7	E	1110	137	2	0010	177	E	1110	1B7	A	1010	1F7	6	0110
038	E	1110	078	6	0110	0B8	6	0110	0F8	E	1110	138	6	0110	178	E	1110	1B8	A	1010	1F8	2	0010
039	E	1110	079	6	0110	0B9	2	0010	0F9	A	1010	139	2	0010	179	A	1010	1B9	A	1010	1F9	2	0010
03A	E	1110	07A	6	0110	0BA	2	0010	0FA	A	1010	13A	6	0110	17A	E	1110	1BA	A	1010	1FA	2	0010
03B	A	1010	07B	2	0010	0BB	2	0010	0FB	A	1010	13B	2	0010	17B	A	1010	1BB	A	1010	1FB	2	0010
03C	E	1110	07C	6	0110	0BC	6	0110	0FC	E	1110	13C	6	0110	17C	E	1110	1BC	E	1110	1FC	6	0110
03D	E	1110	07D	6	0110	0BD	6	0110	0FD	E	1110	13D	6	0110	17D	E	1110	1BD	E	1110	1FD	6	0110
03E	E	1110	07E	6	0110	0BE	6	0110	0FE	E	1110	13E	6	0110	17E	E	1110	1BE	E	1110	1FE	6	0110
03F	E	1110	07F	6	0110	0BF	6	0110	0FF	E	1110	13F	6	0110	17F	E	1110	1BF	E	1110	1FF	6	0110

PART NUMBER: 23-946A9-00
DEVICE TYPE:512 X 4
SCHEMATIC SHEET #:D-CS-M8391-0-MCTC
LOCATION/DESCRIPTION: E51 / PROTECTION ROM

LEFT COLUMN OF BIN DATA IS MSB
BINARY DATA "1" = HIGH
BINARY DATA "0" = LOW

THIS DRAWING AND SPECIFICATIONS, HEREIN, ARE THE PROPERTY OF DIGITAL EQUIPMENT CORPORATION AND SHALL NOT BE REPRODUCED OR COPIED OR USED IN WHOLE OR IN PART AS THE BASIS FOR THE MANUFACTURE OR SALE OF ITEMS WITHOUT WRITTEN PERMISSION. COPYRIGHT © 1981, DIGITAL EQUIPMENT CORPORATION

REVISIONS: CHK | CHANGE NO. | REV

digital — DRN. D M Hafner, DATE 27-OCT-81; CHK'D.; ENG.; BOARD LOCATION:; SHEET 16 OF 16
DSK:GLMC16.T2P[1106,1500] 27-OCT-81 18:27 — NEXT HIGHER ASSEMBLY: B-DD-M8391-0-0
FIRST USED ON OPTION/MODEL: 11/730

TITLE: MEM. CTLR. ROM AND PAL LISTINGS
SIZE D | CODE GL | NUMBER M8391-0-0 | REV. A

G.M. HAFNER, [1106,1500]GLMC16.DPL, SCALE 2, "D" RELEASE BOX
G.M. HAFNER GLMC16.PLO[1106,1500] 27-OCT-81 18:32

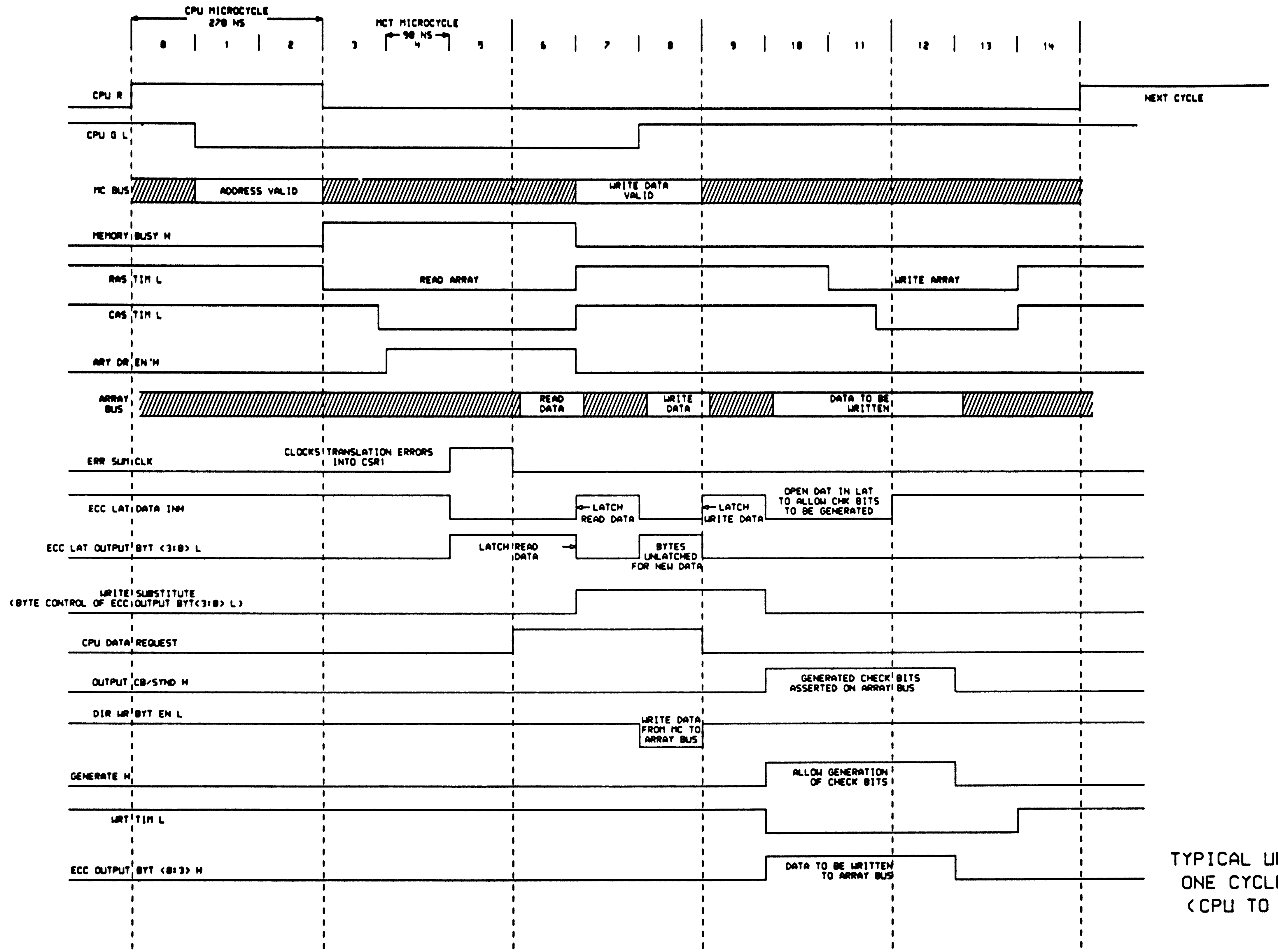

TYPICAL UNALIGNED
ONE CYCLE WRITE
(CPU TO ARRAY)

THIS DRAWING AND SPECIFICATIONS, HEREIN, ARE THE PROPERTY OF DIGITAL EQUIPMENT CORPORATION AND SHALL NOT BE REPRODUCED OR COPIED OR USED IN WHOLE OR IN PART AS THE BASIS FOR THE MANUFACTURE OR SALE OF ITEMS WITHOUT WRITTEN PERMISSION. COPYRIGHT © 1981, DIGITAL EQUIPMENT CORPORATION

REVISIONS		
CHK	CHANGE NO.	REV

digital

DRN. D.M. Hafner	DATE 10-DEC-81	ENG.	DATE
CHK'D.	DATE	BOARD LOCATION:	
		SHEET 1 OF 3	
[367,1500]MCTTD1.DRW	05-OCT-81 12:20	NEXT HIGHER ASSEMBLY:	
FIRST USED ON OPTION/MODEL: NEBULA			

TITLE: MCT TIMING DIAGRAM #1

SIZE	CODE	NUMBER	REV.
D	TD	M8391-0-0	A

G.M. HAFNER, [1186,1500]MCTTD1.DPL, SCALE 2, "D" RELEASE BOX
G.M. HAFNER MCTTD1.PLO[1186,1500] 10-DEC-81 17:43

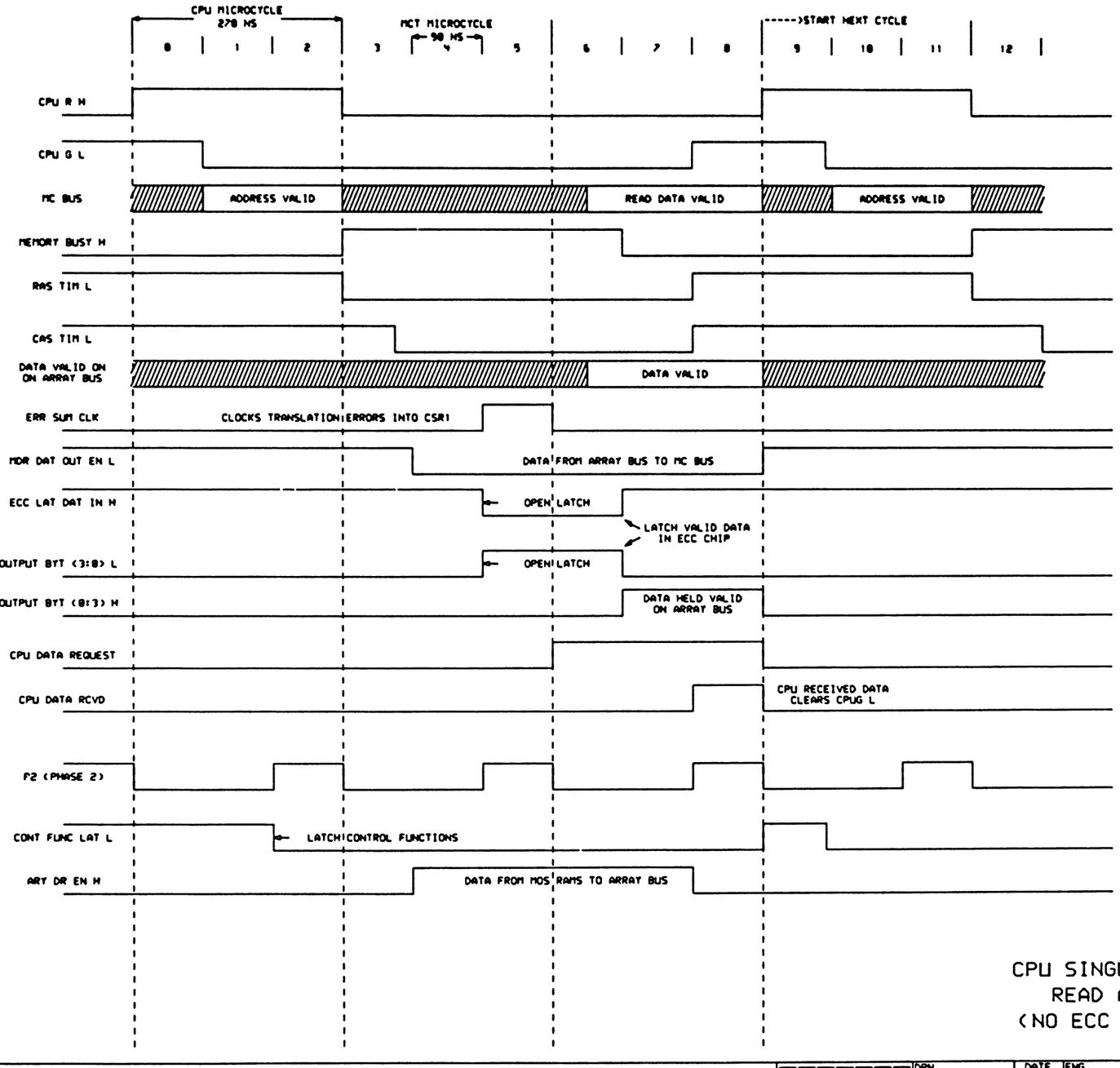

CPU SINGLE CYCLE
READ ARRAY
(NO ECC ERRORS)

"THIS DRAWING AND SPECIFICATIONS, HEREIN, ARE THE PROPERTY OF DIGITAL EQUIPMENT CORPORATION AND SHALL NOT BE REPRODUCED OR COPIED OR USED IN WHOLE OR IN PART AS THE BASIS FOR THE MANUFACTURE OR SALE OF ITEMS WITHOUT WRITTEN PERMISSION. COPYRIGHT © 1981, DIGITAL EQUIPMENT CORPORATION"

REVISIONS		
CHK	CHANGE NO.	REV

digital

DRN D.M.Hafner DATE 10-DEC-81 ENG. DATE
CHK'D. DATE BOARD LOCATION:
SHEET 2 OF 3
(367,1500)MCTTD2.DRW 05-OCT-81 12:28 NEXT HIGHER ASSEMBLY:
FIRST USED ON OPTION/MODEL: NEBULA

TITLE: MCT TIMING DIAGRAM #2

SIZE	CODE	NUMBER	REV.
D	TD	M8391-0-0	A

G.M. HAFNER, [1106,1500]MCTTD2.DPL, SCALE 2, "D" RELEASE BOX
G.M. HAFNER MCTTD2.PLO[1106,1500] 10-DEC-81 17:43

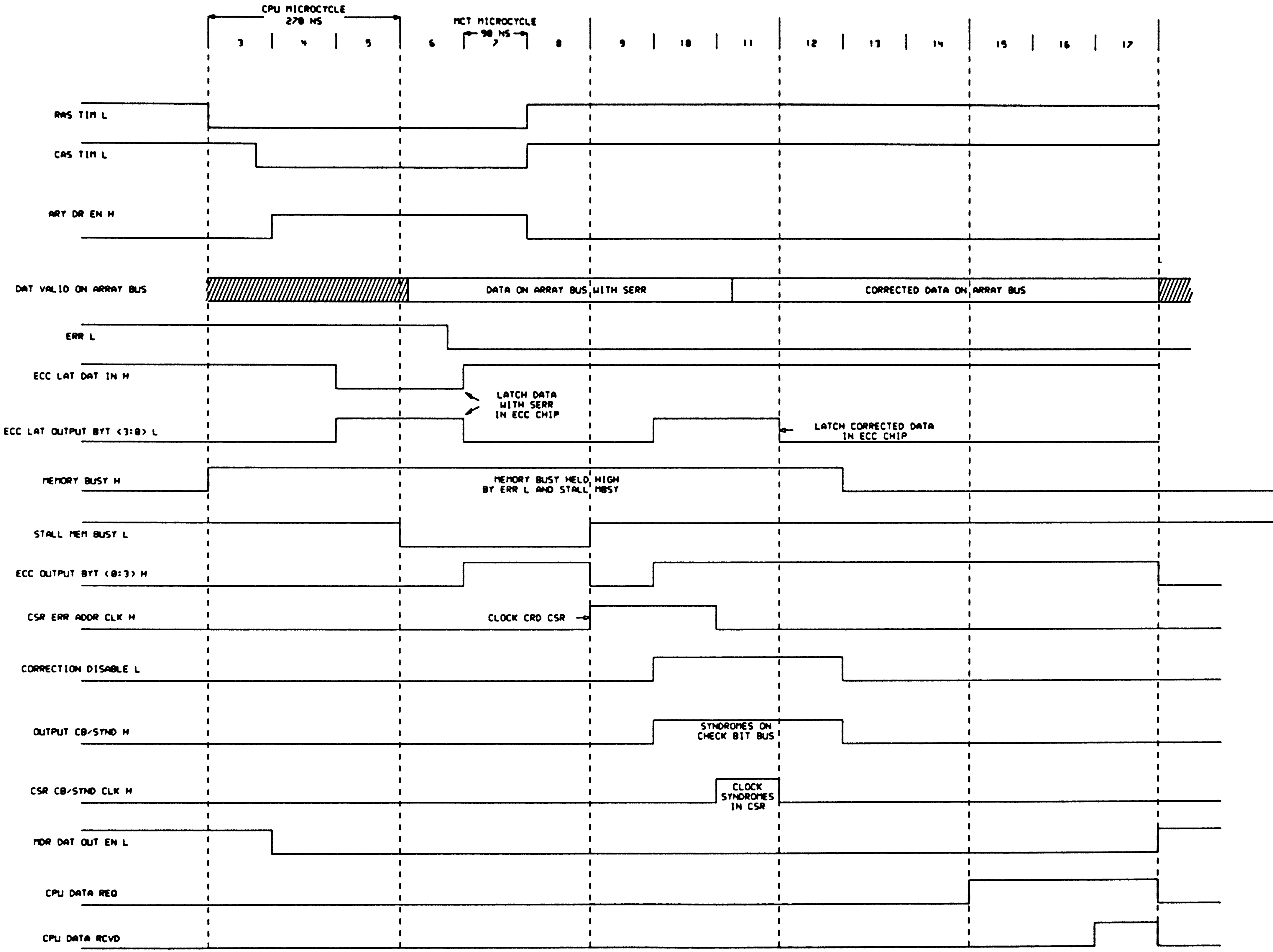

CPU SINGLE CYCLE
READ FROM ARRAY
W/SINGLE ECC ERROR

THIS DRAWING AND SPECIFICATIONS, HEREIN, ARE THE PROPERTY OF DIGITAL EQUIPMENT CORPORATION AND SHALL NOT BE REPRODUCED OR COPIED OR USED IN WHOLE OR IN PART AS THE BASIS FOR THE MANUFACTURE OR SALE OF ITEMS WITHOUT WRITTEN PERMISSION. COPYRIGHT © 1981, DIGITAL EQUIPMENT CORPORATION

REVISIONS		
CHK	CHANGE NO.	REV

digital

DRN. D.McHafner	DATE 10-DEC-81	ENG.	DATE	TITLE: MCT TIMING DIAGRAM #3
CHK'D.	DATE	BOARD LOCATION: SHEET 3 OF 3		
[367,1500]MCTTD3.DRW 05-OCT-81 12:20		NEXT HIGHER ASSEMBLY:		
FIRST USED ON OPTION/MODEL: NEBULA				

SIZE	CODE	NUMBER	REV.
D	TD	M8391-0-0	A

G.M. HAFNER, [1186,1500]MCTTD3.DPL, SCALE 2, "D" RELEASE BOX
G.M. HAFNER MCTTD3.PLO[1186,1500] 10-DEC-81 17:43

8 | D EC 5013893-0-0 B (printed upside down) | 6 | 5 | LAYER 1 | 3 | 2 | 1

THIS DRAWING AND SPECIFICATIONS HEREIN ARE THE PROPERTY OF DIGITAL EQUIPMENT CORPORATION AND SHALL NOT BE REPRODUCED OR COPIED OR USED IN WHOLE OR IN PART AS THE BASIS FOR THE MANUFACTURE OR SALE OF ITEMS WITHOUT WRITTEN PERMISSION

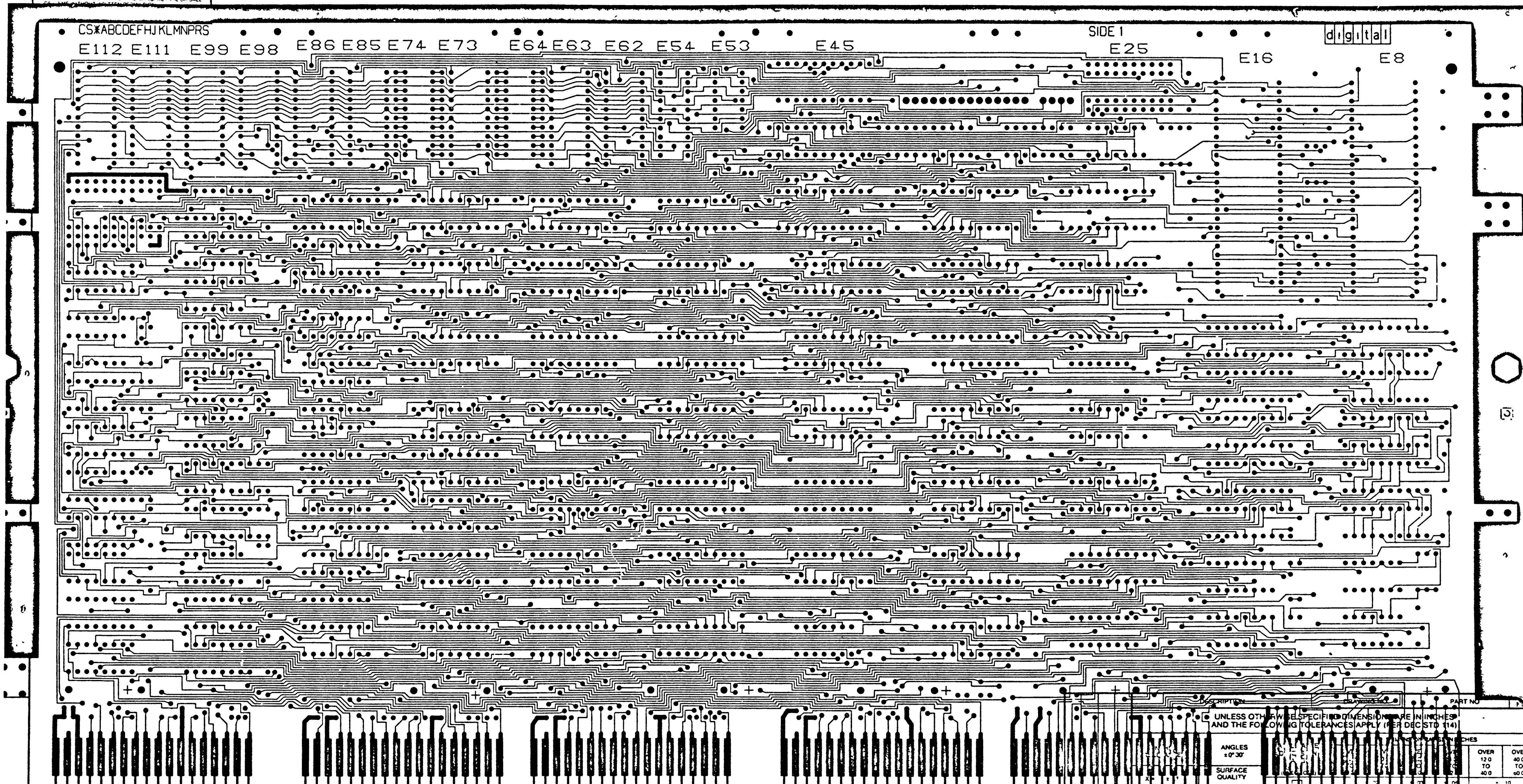

D
C
B
A

REVISION HISTORY		
DATE	ECO NUMBER	REV
	M8391 TW001	B
27-OCT-81	K OK	
23-FEB-82		

DEC 5013893-0-0 REV B

UNLESS OTHERWISE SPECIFIED DIMENSIONS ARE IN INCHES AND THE FOLLOWING TOLERANCES APPLY (PER DEC STD 114)

ANGLES ±0° 30'

SURFACE QUALITY

MICROINCHES

QUANTITY & VARIATION

X = ± .1
XX = ± .02
XXX = ± .005

OVER 12.0 TO 40.0

OVER 40.0 TO 60.0

± .004 | ± .008 | ± .012 | ± .016 | ± .024 | ± .04

THIRD ANGLE PROJECTION

DO NOT SCALE DRAWING

REMOVE BURRS AND BREAK SHARP CORNERS

MATERIAL

FINISH

DRN	J. Casey	DATE 7-9-80
CHKD	J. Casey	DATE 7-9-80
DES ENG		DATE 8-8-80
RESP ENG		DATE 8-8-80
MFG ENG		DATE 7-8-80
NEXT HIGHER DOC		

DESCRIPTION | DRAWING NO | PART NO

TITLE

digital

ETCH CUT DRAWING

DOCUMENT NUMBER

SIZE	CODE	NUMBER	REV
D	EC	5013893-0-0	B

SCALE 2:1 | SHEET 1 OF 3

8 | 7 | 6 | 5 | 4 | 3 | 2 | 1

8 | 7 | 6 | 5 | 4 | 3 | 2 | 1

D EC 5013893-0-0 B

LAYER 4

5013893B M8391

SIDE 2 MCT

D

C

B

A

REVISION HISTORY		
DATE	E.C.O NUMBER	REV.

TITLE: ETCH CUT DRAWING

DOCUMENT NUMBER			
SIZE	CODE	NUMBER	REV
D	EC	5013893-0-0	B
SCALE 2-1		SHEET 2 OF 3	

8 | 7 | 6 | 5 | 4 | 3 | 2 | 1

"THIS DRAWING AND SPECIFICATIONS, HEREIN ARE THE PROPERTY OF DIGITAL EQUIPMENT CORPORATION AND SHALL NOT BE REPRODUCED OR COPIED OR USED IN WHOLE OR IN PART AS THE BASIS FOR THE MANUFACTURE OR SALE OF ITEMS WITHOUT WRITTEN PERMISSION.
COPYRIGHT 1980 DIGITAL EQUIPMENT CORPORATION"

REV B | NUMBER 5013893 0 0 | SIZE CODE DEC

REWORK INSTRUCTIONS:

ETCH CUT SIDE 2:

~~0-1 BETWEEN E108-12 TO E105-7.~~

ECO#M8391 TW001

1-1 STEP *0-1 OF THIS DRAWING IS ELIMINATED AS PER ECO M8391-TW001.

REVISION HISTORY

DATE	ECO NUMBER	REV

DRD 127A

TITLE: ETCH CUT DRAWING

DOCUMENT NUMBER

SIZE	CODE	NUMBER	REV.
D	EC	5013893-0-0	B

SCALE 2-1 | SHEET 3 OF 3

TW

SIZE	CODE	NUMBER	REV.
B	DD	M8394-0	C

DRAWING NO.	NO. OF SHTS.	PART NO.	DESCRIPTION	REVISIONS
			MODULE REVISION	A B
B-DD-M8394-0	1		DRAWING DIRECTORY	A B
D-UA-M8394-0-0	3		UNIT ASSEMBLY	A B
K-PL-M8394-0-DBP	3		PARTS LIST	A B
		5014438	ETCH BOARD	A A
K-PC-M8394-0-DBC			PC DATA PATH	A A
D-MD-5014438-0-0	5		MECHANICAL DRAWINGS	A A
D-EC-5014438-0-0	3		ETCH CUT DRAWING	A B
K-CS-M8394-0-DBS	1		DESIGN DATA BASE SUDS	A B
D-CS-M8394-0-WCSA	1	*	8085, A/D BUS, AND CONTROL	A B
D-CS-M8394-0-WCSB	1	*	CONSOLE PANEL AND CPU CONTROL	A B
D-CS-M8394-0-WCSC	1	*	CONSOLE INTERFACE	A B
D-CS-M8394-0-WCSE	1	*	8085 MEMORY AND CONTROL	A B
D-CS-M8394-0-WCSF	1	*	BASIC CLOCK GENERATOR	A B
D-CS-M8394-0-WCSH	1	*	CONTROL STORE DATA (00:15)	A B
D-CS-M8394-0-WCSJ	1	*	CONTROL STORE DATA (16:23)	A B
D-CS-M8394-0-WCSK	1	*	MEMORY REFRESH CONTROL	A B
D-CS-M8394-0-WCSL	1	*	XCS WRITE AND SELECT CONTROL	A B
D-CS-M8394-0-WCSM	1	*	OPTIONAL CONTROL STORE - HIGH	A B
D-CS-M8394-0-WCSN	1	*	OPTIONAL CONTROL STORE - LOW	A B
D-CS-M8394-0-WCSP	1	*	MODEM INTERFACE AND 8085 RAM	A B
D-CS-M8394-0-WCSR	1	*	FILTER CAPACITORS	A B
D-BD-M8394-0-0	1	*	WCS BLOCK DIAGRAM	A
D-TD-M8394-0-0	1	*	WCS TIMING DIAGRAM	A
D-GL-M8394-0-0			ROM & PAL LISTINGS	A

NOTES:

*CONTROL SOURCE IS THE SUDS DATA BASE

NO CONTROLLED PAPER ORIGINALS EXIST

REVISIONS	REV	CHG NO.	DATE
	B	TW001	12-81

"THIS DRAWING AND SPECIFICATIONS, HEREIN, ARE THE PROPERTY OF DIGITAL EQUIPMENT CORPORATION AND SHALL NOT BE REPRODUCED OR COPIED OR USED IN WHOLE OR IN PART AS THE BASIS FOR THE MANUFACTURE OR SALE OF ITEMS WITHCUT WRITTEN PERMISSION.

COPYRIGHT© 1981 DIGITAL EQUIPMENT CORPORATION

digital

USED ON OPTION/MODEL

DRN.	J. CASEY	8-26-80
CHK'D	J. CASEY	8-26-80
ENG.	S. LACHEY	9-19-80
PROD.	C. CONSIDINE	10-8-80

TITLE: WCS

SIZE	CODE	NUMBER	REV.
B	DD	M8394-0	C

SHEET 1 OF 1

DRB 126

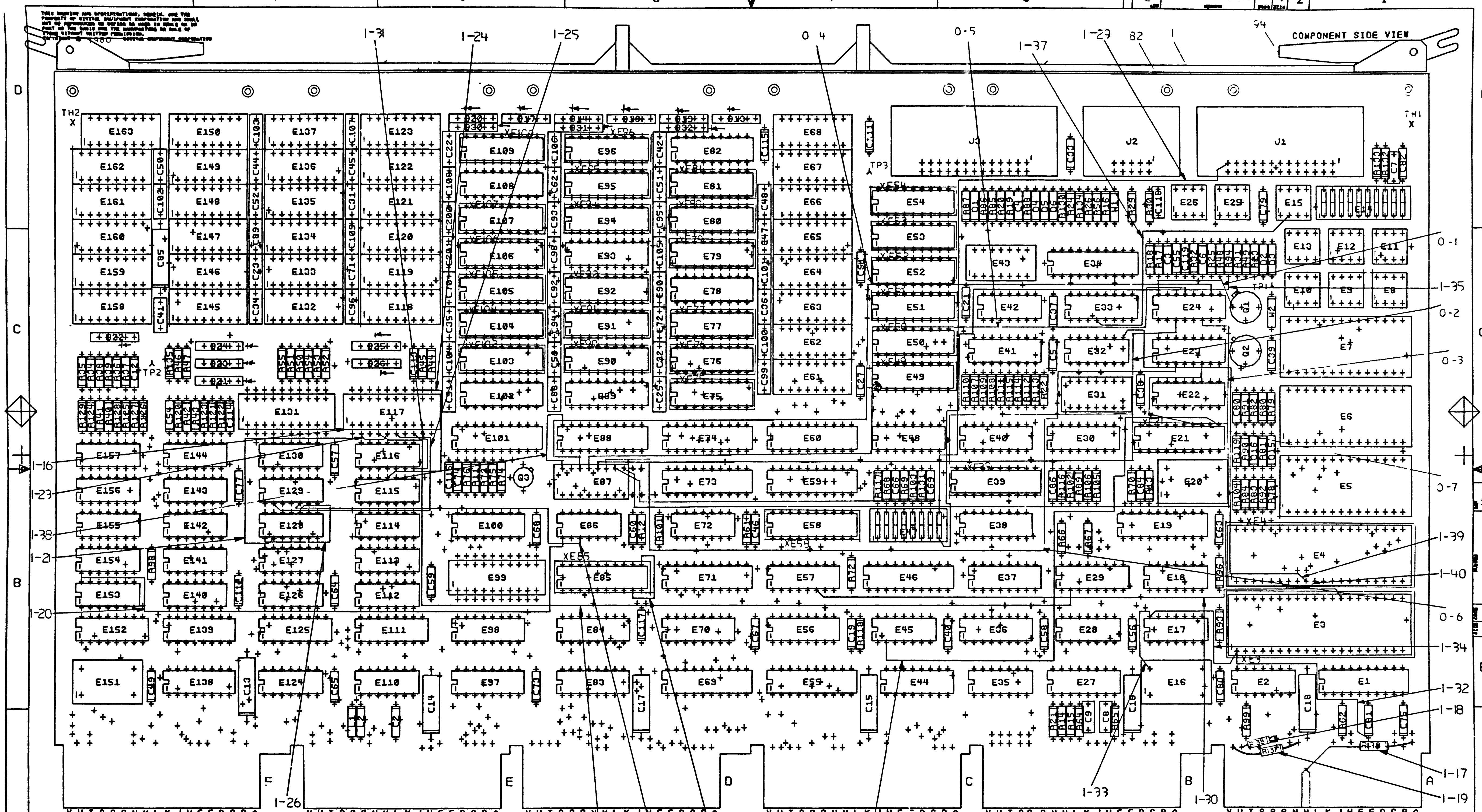

NOTES:

1. SPARE I.C. LOCATIONS ARE E99, E117, E131.
2. INSTALL SOCKET ITEM 97 AT E49 THRU E54, E75-E77, E79-E81, E90-E92, E94-E96, E103-E107, E109
3. INSTALL SOCKET ITEM 90 AT E21, E39, E58, E85.
4. INSTALL SOCKET ITEM 107 AT E3, E4

STEP &	↑ Y AXIS	Ø	STEP Ø	TIMES
REPEAT	→ X AXIS	Ø	STEP Ø	TIMES

CHK	CHANGE NO	REV
	M8394-TW001	B
	R. DAY	

ETCH REV.

DATA BASE REV A

SIGNATURES		DATE
DRN.	[illegible]	[illegible]
CHK'D.	E TGERRY	[illegible]
MECH.ENG.	[illegible]	[illegible]
PROJ.ENG.	[illegible]	[illegible]
PROD.	[illegible]	[illegible]
SCALE	2/1	
SHT.	1 OF 3	
NEXT HIGHER ASSY.	B-DD-M8394-0	

digital

TITLE WCS

SIZE	CODE	NUMBER	REV
D	UA	M8394-0-0	B

1 MS#170299A

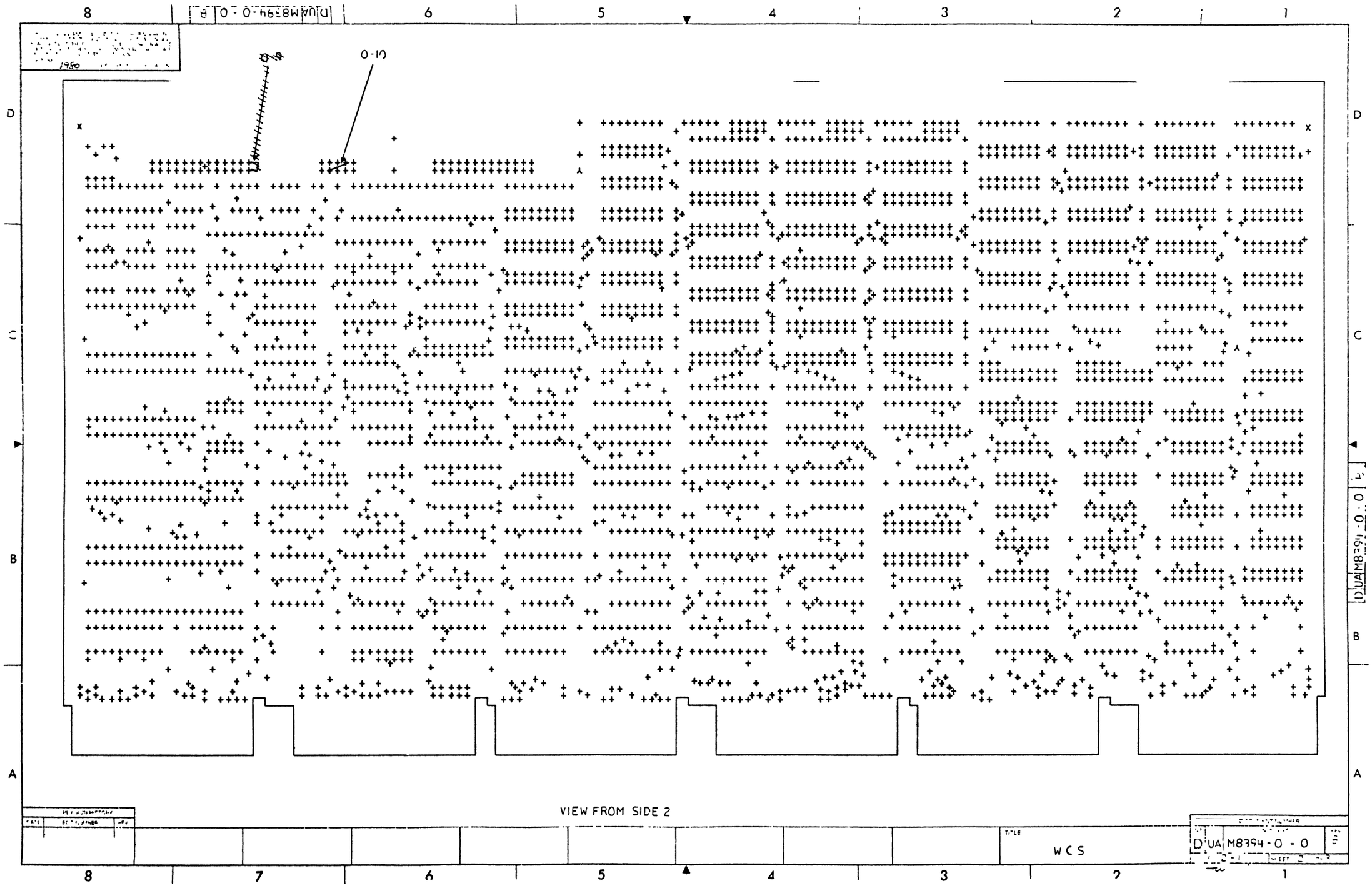
8
7
6
5
4
3
2
1
D
C
B
A
0-10
DUAM8394-0-0
VIEW FROM SIDE 2
TITLE
WCS
DUAM8394-0-0

"THIS DRAWING AND SPECIFICATIONS, HEREIN ARE THE PROPERTY OF DIGITAL EQUIPMENT CORPORATION AND SHALL NOT BE REPRODUCED OR COPIED OR USED IN WHOLE OR IN PART AS THE BASIS FOR THE MANUFACTURE OR SALE OF ITEMS WITHOUT WRITTEN PERMISSION.
COPYRIGHT © 1980 DIGITAL EQUIPMENT CORPORATION"

REWORK INSTRUCTIONS

WIRE ADDS SIDE 1:

0-1 FROM Q1-1 TO E24-16
0-2 FROM E24-3 TO E87-11
0-3 FROM E24-6 TO E87-8
0-4 FROM E24-10 TO E87-13
0-5 FROM E24-13 TO E87-12
0-6 FROM E23-3 TO E87-10
0-7 FROM E23-6 TO E87-9
~~0-8 FROM E87-18 TO E88-20~~

WIRE ADDS SIDE 2:

~~0-9 FROM J1-25 TO J1-24~~
0-10 FROM J2-4 TO J2-7

ECO#1

COMPONENT ADDS:

1-15 STEP 0-9 HAS BEEN ELIMINATED.
1-16 ADD A 74S175 IN SPARE LOCATION E117.
1-17 ADD A 100 OHM RESISTOR (R136) FROM PTH, CONNECTED TO AA2, TO FINGER PIN AM1.
1-18 ADD A 100 OHM RESISTOR (R138) FROM PTH, CONNECTED TO AV1 NEAR R99, TO PTH GOING TO AR1.
1-19 ADD A 100 OHM RESISTOR (R137) TO PTH, CONNECTED TO AV1 AND NEAR PTH MENTIONED IN STEP 1-4, TO PTH CONNECTED TO AM2 NEAR C81.

WIRE ADDS SIDE 1:

1-20 FROM E86-01 TO E154-01.
1-21 FROM E117-01 TO E128-03.
1-22 FROM E117-04 TO E29-02.
1-23 FROM E117-02 TO E117-05.
1-24 FROM E117-09 TO E115-11.
1-25 FROM E117-06 TO E129-02.
1-26 FROM E128-01 TO E128-10.
1-27 FROM E86-03 TO E129-05.
1-28 FROM E85-09 TO E85-11.
1-29 FROM E47-09 TO J1-25.
1-30 FROM E57-06 TO E3-28.
1-31 FROM E117-08 TO E116-7.
1-32 FROM BOTTOM OF C81 TO E3-01.
1-33 FROM E16-4 TO E17-14.
1-34 FROM E17-14 TO E3-01.

ECO#1

WIRE ADDS SIDE 1:

1-35 FROM E47-08 TO BOTTOM OF R94.
1-36 FROM E45-02 TO E21-11.
1-37 FROM E15-02 TO E33-04.
1-38 FROM E88-20 TO E87-14, REPLACES STEP 0-8.
1-39 FROM E4-09 TO E32-08.
1-40 FROM E4-10 TO E4-06.

REVISION HISTORY		
DATE	ECO NUMBER	REV

TITLE: WCS

DOCUMENT NUMBER: SIZE D | CODE UA | NUMBER M8394-0-0 | REV B

SCALE 2-1 | SHEET 3 OF 3

DRD 127A

AUTOMATED BY PRTLST,3N(43)

P A R T S L I S T

LINE	ITEM	DOCUMENT NUMBER	PART NUMBER	DESCRIPTION	QTY PER VARIATION 00	REFERENCE DESIGNATOR
1	1	D-MD-5014439-0-0	5014439-00	DRILL AND ETCH BRD WCS	1	
2	85		1000043-00	1000.0 MMF 250V 20% Y5F DISC	4	C7-C9,C118
3	86		1010274-01	.22 MFD 50V +80-20% Z5U CER	45	C22,C23,C25,C31,C32,C34-C36,C41,
						CONT C42,C44,C45,C47,C48,C50-C53,C62,
						CONT C70-C72,C88-C96,C98-C109,C200,
						CONT C201
4	88		1012784-00	.047 MFD 50V +80-20% CER	49	C2-C6,C12,C19,C21,C27,C33,
						CONT C37-C40,C46,C49,C54-C61,C63-C69,
						CONT C73-C75,C81-C84,C111-C117,C119,
						CONT C77,C79,C86
5	89		1013466-11	.22 MFD 50V +80-20% Z5U CER	1	C80
6	87		1017472-00	10 MFD 35V +50-10% AL EL	7	C13-C18,C85
7	90		1100122-00	1N 748A VZ= 3.9 5%	1	D15
8	91		1105796-00	1N 4004 PIV=400 I= 1A D041 SP	7	D1-D6,D16
9	93		1209941-09	HEADER 26POS RT ANGLE RCPT	2	J1,J3
10	92		1209941-05	HEADER,100 10POS RT ANGLE	1	J2
11	94		1216988-02	HANDLE,MODULE,HEX TWO EJECTORS	1	
12	95		1211164-04	SW,DIP 1P 1A 8POS	1	E47
13	96		1211164-06	SW,DIP 1P 1A 10POS	1	E14
14	97		1215006-03	SOCKET 18PIN IC LOW PROFILE	24	XE49-XE54,XE75-XE77,XE79-XE81,
						CONT XE90-XE92,XE94-XE96,XE103-XE107,
						CONT XE109
15	98		1215006-04	SOCKET 20PIN IC LOW PROFILE	4	XF21,XE39,XE85,XE58
16	2		1300197-00	33.0 .25 W 5.0 % CC	1	R80
17	3		1300229-00	100.0 .25 W 5.0 % CC	33	R11-R16,R25,R35,R37,R39,R41,R43,
						CONT R45,R47,R51,R53,R61,R62,R70,R74,
						CONT R93,R96,R98,R99,R101,R102,
						CONT R116-R118,R135,R17,R19,R21
18	4		1300295-00	330.0 .25 W 5.0 % CC	1	R73
19	5		1300309-00	390.0 .25 W 5.0 % CC	2	R64,R65

REVISION HISTORY			BASIC PART NO: M8394											
ENG	ECO NUMBER	REV	SECTION A OF A	DRN: J.CASEY	DATE: 12-JUN-80	D	I	G	I	T	A	L		
	INITIAL	A	SECTION,VARIATION INDEX	CHK'D: E.T.GERRY	DATE: 12-JUN-80	TITLE: PARTS LIST								
			[A] 00			WCS								
			[B]											
			[C]	DES.ENG: S.LACKEY	DATE: 7-29-80									
			[D]											
			[E]			DOCUMENT NUMBER								
			[F]	RESP.ENG.: S.LACKEY	DATE: 7-29-80									
			[H]			SIZE	CODE	NUMBER					REV	
			[J]											
			[K]	MFG.ENG.: J.CONSIDINE	DATE: 08-OCT-80	K	PL	M8394-0-DBP					A	
			[L]											
			[M]	ASSEMBLY NUMBER:	TOP DOCUMENT NUMBER:			FILE NAME:					EDIT #	
			[N]	D-UA-M8394-0-0				Z1272.PLS					19	

"THIS DRAWING AND SPECIFICATIONS HEREIN, ARE THE PROPERTY OF DIGITAL EQUIPMENT CORPORATION AND SHALL NOT BE REPRODUCED OR COPIED OR USED IN WHOLE OR IN PART AS THE BASIS FOR THE MANUFACTURE OR SALE OF ITEMS WITHOUT WRITTEN PERMISSION. COPYRIGHT (C) 1980, DIGITAL EQUIPMENT CORPORATION "

TW

LINE	ITEM	DOCUMENT NUMBER	PART NUMBER	DESCRIPTION	QTY PER VARIATION 00	REFERENCE DESIGNATOR
20	6		1300316-00	470.0 .25 W 5.0 % CC	2	R66,R67
21	7		1300365-00	1.0 K .25 W 5.0 % CC	13	R18,R20,R22,R32,R68,R69,R72,R76,
					CONT	R91,R94,R103,R119,R131
22	8		1302394-00	30.0 K .25 W 5.0 % CC	9	R24,R26,R29,R30,R56,R130,
					CONT	R132-R134
23	9		1300479-00	10.0 K .25 W 5.0 % CC	3	R89,R90,R106
24	11		1301322-00	180.0 .25 W 5.0 % CC	1	R75
25	12		1301522-00	27.0 .25 W 5.0 % CC	21	R34,R36,R38,R40,R42,R44,R50,R52,
					CONT	R54,R55,R120-R129,R46
26	13		1302177-00	47.0 K .25 W 5.0 % CC	4	R23,R31,R48,R49
27	14		1302379-00	75.0 .25 W 5.0 % CC	1	R78
28	15		1302391-00	20.0 K .25 W 5.0 % CC	1	R92
29	16		1302685-00	909.0 .25 W 1.0 % RN55D-F10	2	R81,R104
30	17		1303114-00	1.0 K .25 W 1.0 % RN55D-F10	1	R105
31	18		1303313-00	12.10 K .25 W 1.0 % RN55D-F10	1	R86
32	19		1309295-00	1.80 K .25 W .10% RN55E-B 2	1	R84
33	20		1310634-00	2.67 K .25 W 1.0 % RN55D-F10	1	R87
34	21		1312628-00	R NETWORK 14-176.5 14-375 16PIN	2	E57,E84
35	22		1312990-00	12.70 K .25 W 1.0 % RN55D 10	1	R85
36	23		1313150-00	430.0 .25 W 5.0 % CC	1	R79
37	24		1313155-00	604.0 .25 W 1.0 % RN55D-F10	2	R82,R83
38	25		1313595-00	17.40 K .25 W 1.0 % RN55D-F10	1	R88
39	26		1314386-00	91.0 .25 W 5.0 % CC	9	R107-R115
40	27		1501913-00	2N 2904A PNP 600MW SI 60 40 Y	2	Q1,Q2
41	28		1503100-00	DEC3009B NPN 200MW SI 20 25	1	Q3
42	29		1601562-00	1.0 UH 10% 475MA #DD1.00	1	L2
43	30		1612946-01	33 UH 10% 260MA	1	L1
44	31		1616322-00	DELAY= 75NS,5TAPS	1	E130
45	32		1811660-01	OSCILLATOR, XTAL 10.000 MHZ	1	E20
46	33		1811660-26	OSCILLATOR, XTAL 44.4444 MHZ	1	E151
47	34		1813951-00	OSCILLATOR, XTAL 1.0 KHZ	1	E16
48	35		1910532-00	74S00 NAND GATE-QUAD 2IN	1	E86
49	36		1910534-00	74S04 INVERTER GATE-HEX 1I	5	E18,E114,E124,E144,E157
50	37		1910536-00	74S10 NAND GATE-TRIPLE 3IN	1	E128
51	38		1910544-00	74S74 FF-D DUAL,EDGE TRIGG	2	E113,E140
52	39		1910545-00	74S112 FF-JK DUAL,EDGE TRIG	1	E41
53	40		1910550-00	74S174 FF-D HEX	1	E38
54	41		1910552-00	74S194 SHIFT REG.,4BIT RIGH	6	E98,E111,F125,E138,E139,R152
55	42		1910957-00	74S175 FF-D QUAD COMMON CLO	2	E36,E97
56	43		1911579-00	8641 TRANSCEIVER,BUS,QUA	5	E27,E44,E56,E70,E83
57	44		1911676-00	74S139 DECODER-DUAL TWO-INP	2	E30,E100
58	45		1911712-00	74S51 AND-OR GATE-INVERT D	2	E35,E127
59	46		1912108-00	339 VOLT CMPRTR,QUAD	1	E31
60	47		1912388-00	74S02 NOR GATE-QUAD 2IN,PO	1	E112
61	48		1912647-00	LS257 MUX 1 OF 2 (QUAD)	2	E23,E24
62	49		1912648-00	LS251 MUX 8 INPUT,TRI-STA	2	E29,E33
63	50		1912746-00	DEC 74S37 NAND GATE-QUAD 2IN	3	E110,E115,E129
64	51		1912799-00	LS00 NAND-GATE-QUAD 2IN,P	2	E17,E32

D	I	G	I	T	A	L	TITLE	SECTION A OF A
							WCS	

SIZE	CODE	DOCUMENT NUMBER	REV
K	PL	M8394-0-DBP	A

TW

AUTOMATED BY PRTLST,3N(43) — P A R T S L I S T — SHEET A3 OF A3

LINE	ITEM	DOCUMENT NUMBER	PART NUMBER	DESCRIPTION	QTY PER VARIATION 00	REFERENCE DESIGNATOR
65	52		1912808-00	LS11 AND GATE-TRIPLE 3IN	1	E28
66	53		1912824-00	LS74 FF-D DUAL,EDGE TR'GG	1	E42
67	54		1912830-00	LS90 COUNTER,ASYNCH UP,DE	1	E43
68	55		1912860-00	LS259 LATCH 8BIT	2	E22,E37
69	56		1913340-00	74S32 OR GATE-QUAD 2IN	1	E116
70	57		1913462-00	74S240 OCTAL BUFFER,INVERTI	2	E46,E34
71	58		1913493-00	74S241 OCTAL BUFFER,TRI-STA	1	E19
72	59		1913670-00	74S373 LATCH 8BIT TRASP TR	3	E55,E60,E69
73	60		1913671-00	74S374 FF-D OCTAL TRISTATE	1	E7[illegible]
74	61		1913777-00	LS240 DRIVER,LINE,OCTAL,T	1	E1
75	62		1913887-00	74S258 MUX 1 OF 2(QUAD)TRI	2	E40,E48
76	63		1914214-00	LS374 FF-D OCTAL EDGE TRIG	3	E74,E88,E101
77	64		1914451-00	74LS393 COUNTER,BINARY,4BIT	4	E2,E45,E72,E154
78	65		1915019-00	74S38 NAND BUFFER-QUAD 2IN	7	E126,E141-E143,E153,E155,E156
79	66		1915218-00	LS245 TRANSCEIVER,BUS,OCT	1	E73
80	67		1915219-00	LS373 FF-D OCTAL-TRANSPARE	1	E59
81	68		1915415-00	9636 DRIVER,DUAL,EIA RS-	4	E13,E9,E10,E12
82	69		1915416-00	9637 RECEIVER,DUAL,RS-42	5	E8,E11,E15,E25,E26
83	70		2115103-00	RECEIVER-PCI	3	E5-E7
84	71		2116957-02	1K MOS RAM 70NS 1	6	E78,E82,E89,E93,E102,E108
85	72		2116962-00	UP,8-BIT NMOS .8MICRO SEC. INSTR	1	E4
86	73		2117247-02	2118-1	8	E61-E68
87	74		2117247-04	2118 RAM,16KX1,DYNAMIC,10	24	E118-E123,E132-E137,E145-E150,
					CONT	E158-E163
88	75		2117497-00	9513 SYSTEM TIMING CONTRO	1	E3
89	77		23002K5-00	K5-01	1	E85
90	78		23012K4-00	K4-01 PAL ARRAY	1	E39
91	79		23024K3-00	K3-01 PAL,REG, CONT	1	E58
92	80		23045J5-00	J5-01 PAL,LOGIC,CONT	1	E21
93	81		7010918-01	DIODE STICK G652	15	D13,D14,D17-D26,D30-D32
94	82		9000024-01	EYELET, ROLLED FLANGE, .121 OD X	12	
95	83		9009149-00	PIN, STAKING, P.C. BOARD, .025 X	3	TP1-TP3
96	84		9009185-00	JUMPER, WIRE, INSULATED, BLACK B	2	W1,W2
97	100		1300005-04	R NETWORK 15-470 5.0 % 16PIN	1	E87
98	102		23034F2-00	F2-01	1	E54
99	103		23035F2-00	F2-01	1	E53
100	104		23036F2-00	F2-01	1	E51
101	105		23037F2-00	F2-01	1	E49
102	106		1215006-02	*** THIS ITEM IS NOT USED ***	-	
103	107		1215006-08	SOCKET 40PIN IC LOW PROFILE	2	XE3,XE4

D	I	G	I	T	A	L	TITLE	SIZE	CODE	DOCUMENT NUMBER	REV
							WCS	K	PL	M8394-0-D8P	A
							SECTION A OF A				

TW

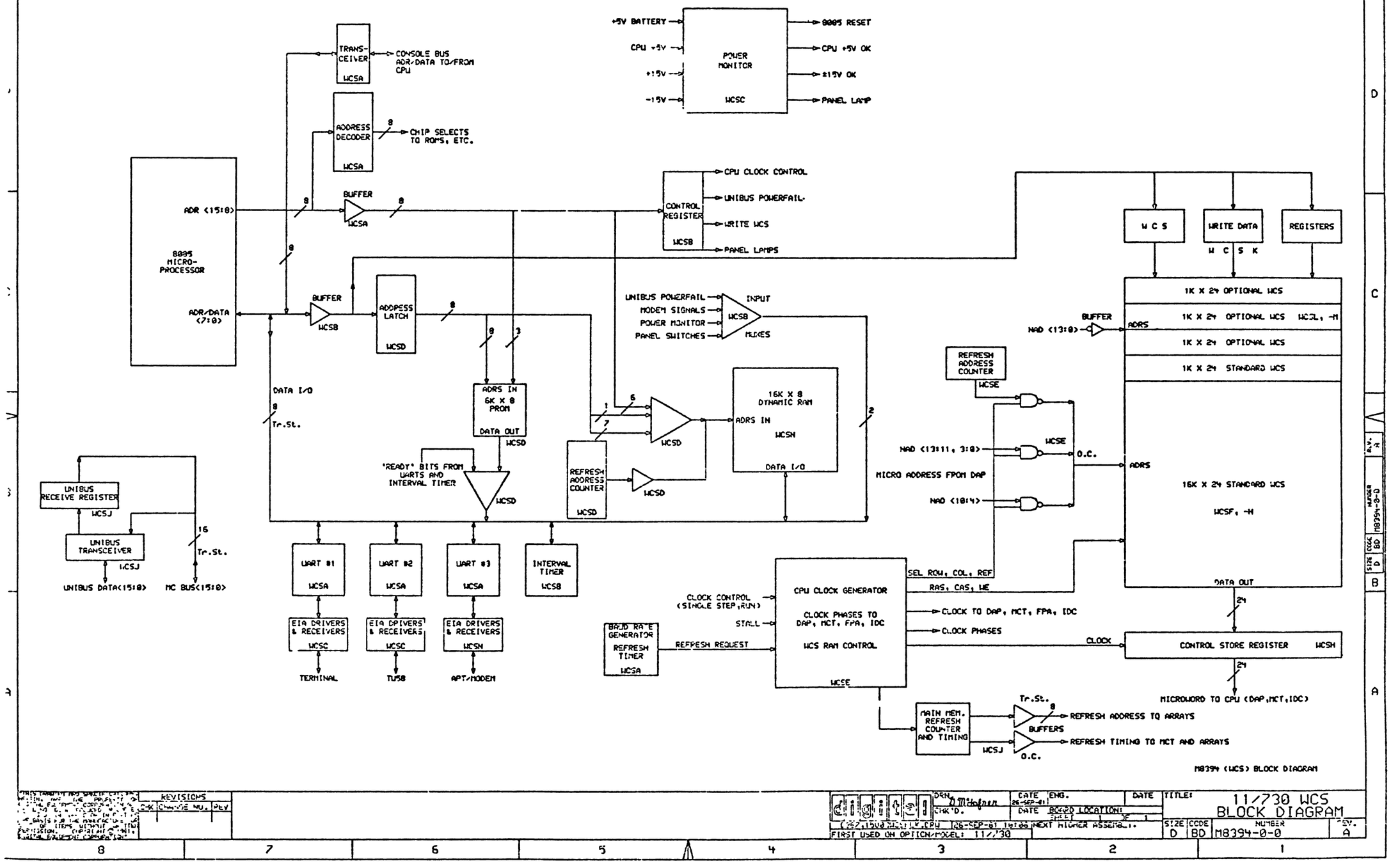

R PROGRAM 2A(11) ** SEP-81 11:35:54 SCALE: 0.500 WCSBLK.P_0
+5V BATTERY
CPU +5V
+15V
-15V
POWER MONITOR
WCSC
8085 RESET
CPU +5V OK
±15V OK
PANEL LAMP
TRANS-CEIVER
WCSA
CONSOLE BUS ADR/DATA TO/FROM CPU
ADDRESS DECODER
WCSA
CHIP SELECTS TO ROMS, ETC.
8085 MICRO-PROCESSOR
ADR <15:0>
ADR/DATA <7:0>
BUFFER
WCSA
BUFFER
WCSB
ADDRESS LATCH
WCSD
CONTROL REGISTER
WCSB
CPU CLOCK CONTROL
UNIBUS POWERFAIL
WRITE WCS
PANEL LAMPS
UNIBUS POWERFAIL
MODEM SIGNALS
POWER MONITOR
PANEL SWITCHES
INPUT
MUXES
WCSB
ADRS IN
6K X 8 PROM
DATA OUT
WCSD
DATA I/O
Tr.St.
'READY' BITS FROM UARTS AND INTERVAL TIMER
WCSD
REFRESH ADDRESS COUNTER
WCSD
16K X 8 DYNAMIC RAM
ADRS IN
WCSN
DATA I/O
UNIBUS RECEIVE REGISTER
WCSJ
UNIBUS TRANSCEIVER
WCSJ
UNIBUS DATA<15:0>
MC BUS<15:0>
Tr.St.
UART #1
WCSA
UART #2
WCSA
UART #3
WCSA
INTERVAL TIMER
WCSB
EIA DRIVERS & RECEIVERS
WCSC
EIA DRIVERS & RECEIVERS
WCSC
EIA DRIVERS & RECEIVERS
WCSN
TERMINAL
TU58
APT/MODEM
BAUD RATE GENERATOR
REFRESH TIMER
WCSA
REFRESH REQUEST
CLOCK CONTROL (SINGLE STEP,RUN)
STALL
CPU CLOCK GENERATOR
CLOCK PHASES TO DAP, MCT, FPA, IDC
WCS RAM CONTROL
WCSE
SEL ROW, COL, REF
RAS, CAS, WE
CLOCK TO DAP, MCT, FPA, IDC
CLOCK PHASES
CLOCK
MAIN MEM. REFRESH COUNTER AND TIMING
WCSJ
Tr.St.
BUFFERS
O.C.
REFRESH ADDRESS TO ARRAYS
REFRESH TIMING TO MCT AND ARRAYS
W C S
WRITE DATA
W C S K
REGISTERS
1K X 24 OPTIONAL WCS
1K X 24 OPTIONAL WCS WCSL, -M
1K X 24 OPTIONAL WCS
1K X 24 STANDARD WCS
BUFFER
NAD <13:0>
ADRS
REFRESH ADDRESS COUNTER
WCSE
NAD <13:11, 3:0>
MICRO ADDRESS FROM DAP
NAD <10:4>
WCSE
O.C.
ADRS
16K X 24 STANDARD WCS
WCSF, -H
DATA OUT
CONTROL STORE REGISTER
WCSH
MICROWORD TO CPU (DAP,MCT,IDC)
M8394 (WCS) BLOCK DIAGRAM
REVISIONS
CHK CHANGE NO. REV
digital
DRN. D.McHafner
CHK'D.
DATE 26-SEP-81
ENG.
DATE
DATE BOARD LOCATION:
SHEET 1 OF 1
26-SEP-81 10:06
NEXT HIGHER ASSEMBLY
FIRST USED ON OPTION/MODEL: 11/730
TITLE: 11/730 WCS BLOCK DIAGRAM
SIZE D
CODE BD
NUMBER M8394-0-0
REV. A

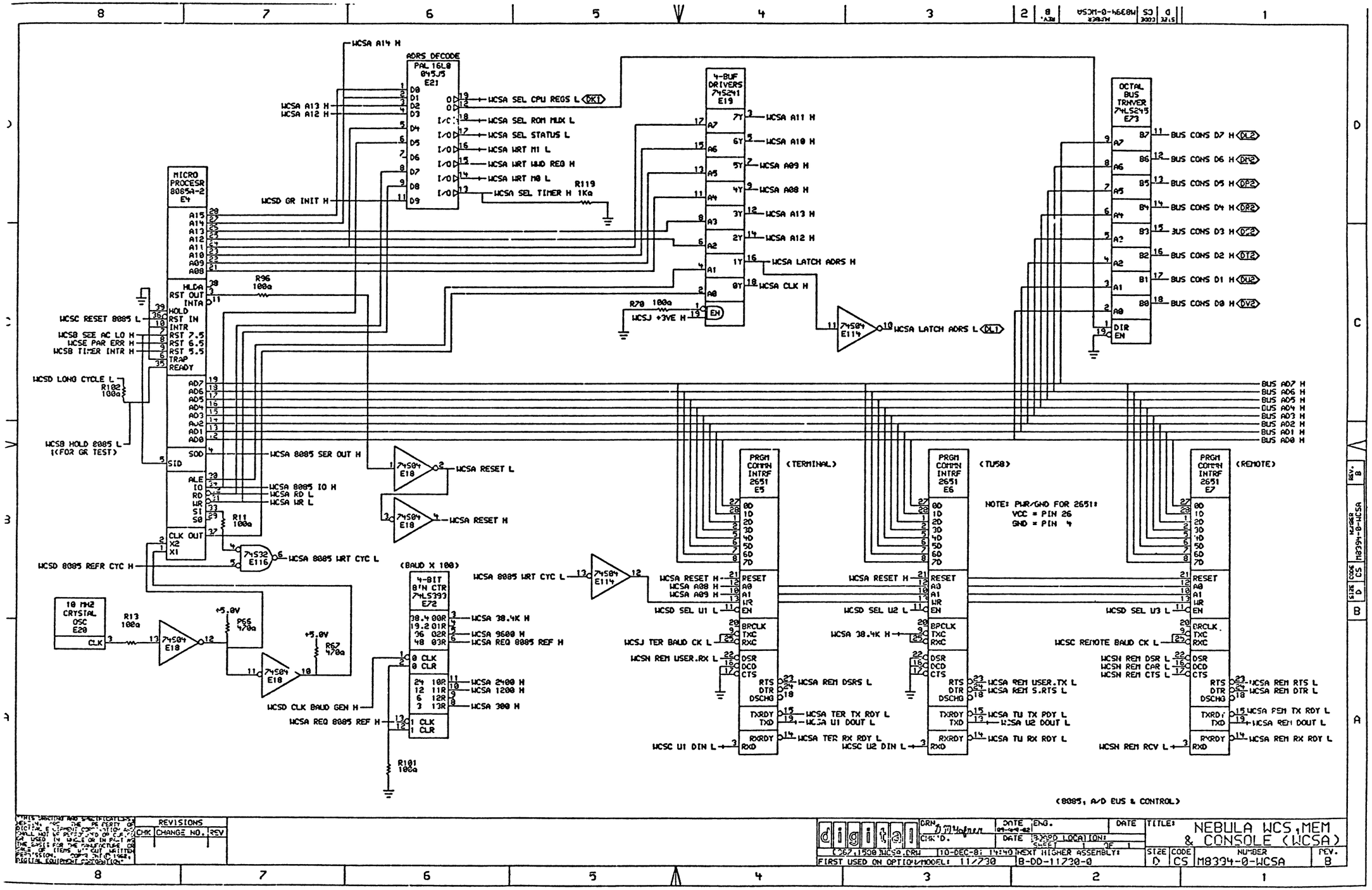

ADRS DECODE
PAL 16L8
045J5
E21
WCSA A14 H
WCSA A13 H
WCSA A12 H
WCSA SEL CPU REGS L
WCSA SEL ROM MUX L
WCSA SEL STATUS L
WCSA WRT M1 L
WCSA WRT WWD REG H
WCSA WRT M0 L
WCSA SEL TIMER H
R119
1Ka
WCSD GR INIT H
MICRO PROCESR
8085A-2
E4
R96
100a
WCSC RESET 8085 L
WCSB SEE AC LO H
WCSE PAR ERR H
WCSB TIMER INTR H
WCSD LONG CYCLE L
R102
100a
WCSB HOLD 8085 L
(FOR GR TEST)
WCSA 8085 SER OUT H
WCSA 8085 IO H
WCSA RD L
WCSA WR L
R11
100a
WCSA 8085 WRT CYC L
WCSD 8085 REFR CYC H
10 MHZ
CRYSTAL
OSC
E20
R13
100a
+5.0V
R66
470a
R67
470a
WCSD CLK BAUD GEN H
WCSA REQ 8085 REF H
(BAUD X 100)
4-BIT
BIN CTR
74LS393
E72
WCSA 38.4K H
WCSA 9600 H
WCSA REQ 8085 REF H
WCSA 2400 H
WCSA 1200 H
WCSA 300 H
R101
100a
4-BUF
DRIVERS
74S241
E19
WCSA A11 H
WCSA A10 H
WCSA A09 H
WCSA A08 H
WCSA A13 H
WCSA A12 H
WCSA LATCH ADRS H
WCSA CLK H
R70 100a
WCSJ +3VE H
74S04
E114
WCSA LATCH ADRS L
OCTAL
BUS
TRNVER
74LS245
E73
BUS CONS D7 H
BUS CONS D6 H
BUS CONS D5 H
BUS CONS D4 H
BUS CONS D3 H
BUS CONS D2 H
BUS CONS D1 H
BUS CONS D0 H
BUS AD7 H
BUS AD6 H
BUS AD5 H
BUS AD4 H
BUS AD3 H
BUS AD2 H
BUS AD1 H
BUS AD0 H
74S04
E18
WCSA RESET L
WCSA RESET H
74S32
E116
WCSA 8085 WRT CYC L
74S04
E114
PRGM
COMMN
INTRF
2651
E5
(TERMINAL)
WCSA RESET H
WCSA A08 H
WCSA A09 H
WCSD SEL U1 L
WCSJ TER BAUD CK L
WCSN REM USER.RX L
WCSA REM DSRS L
WCSA TER TX RDY L
WCSA U1 DOUT L
WCSA TER RX RDY L
WCSC U1 DIN L
PRGM
COMMN
INTRF
2651
E6
(TU58)
WCSA RESET H
WCSD SEL U2 L
WCSA 38.4K H
WCSA REM USER.TX L
WCSA REM S.RTS L
WCSA TU TX RDY L
WCSA U2 DOUT L
WCSA TU RX RDY L
WCSC U2 DIN L
NOTE: PWR/GND FOR 2651:
VCC = PIN 26
GND = PIN 4
PRGM
COMMN
INTRF
2651
E7
(REMOTE)
WCSD SEL U3 L
WCSC REMOTE BAUD CK L
WCSN REM DSR L
WCSN REM CAR L
WCSN REM CTS L
WCSA REM RTS L
WCSA REM DTR L
WCSA REM TX RDY L
WCSA REM DOUT L
WCSA REM RX RDY L
WCSN REM RCV L
(8085, A/D BUS & CONTROL)
REVISIONS
CHK
CHANGE NO.
REV
digital
DRN
CHK'D.
DATE
ENG.
DATE
BOARD LOCATION:
SHEET 1 OF 1
TITLE:
NEBULA WCS, MEM
& CONSOLE (WCSA)
C067,1500 WCSA.DRW
10-DEC-81 14:40
NEXT HIGHER ASSEMBLY:
B-DD-11730-0
FIRST USED ON OPTION/MODEL: 11/730
SIZE
D
CODE
CS
NUMBER
M8394-0-WCSA
REV.
B

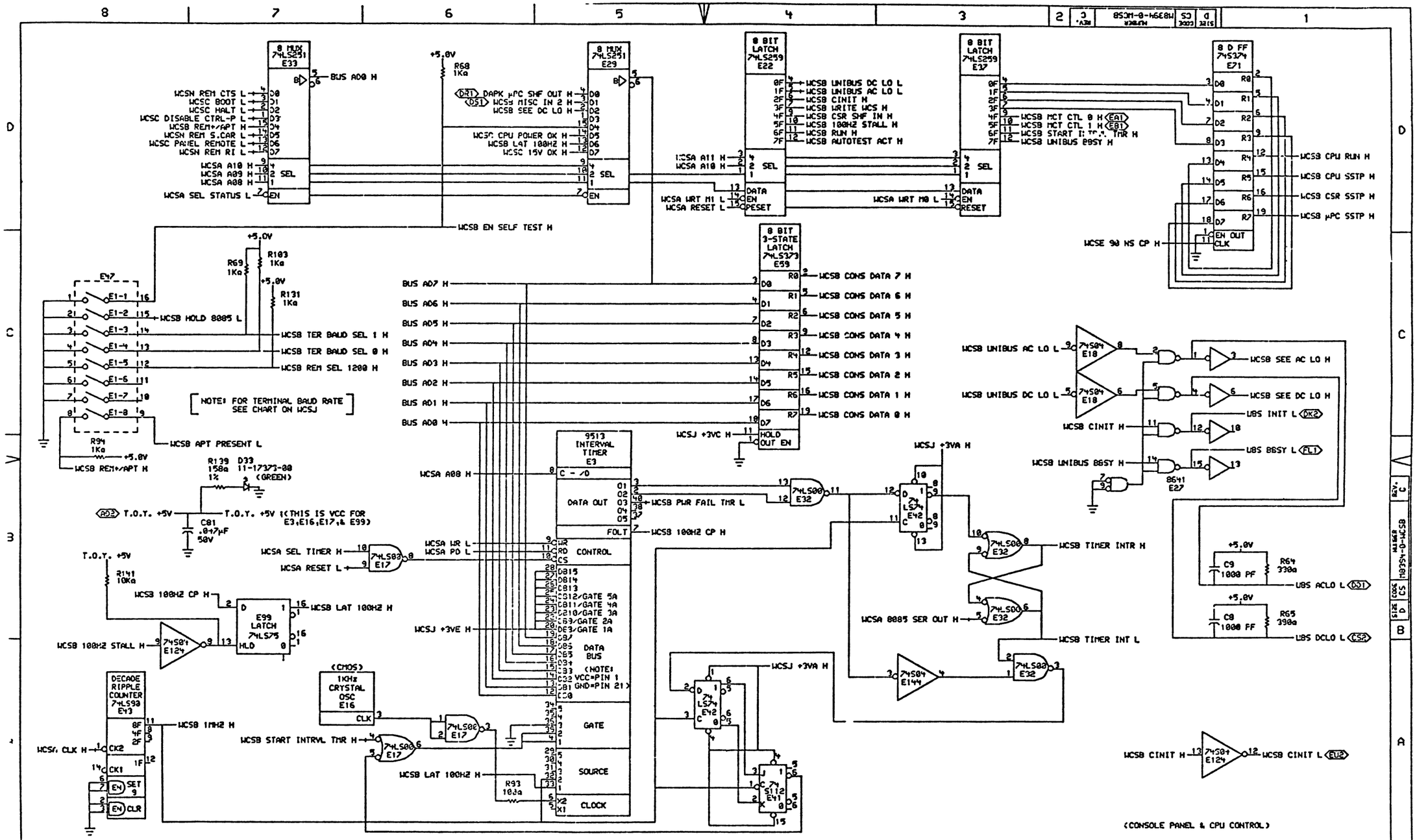

digital	DRN. D.M.Hofner	DATE 09-APR-82	ENG.	DATE
	CHK'D.	DATE	BOARD LOCATION: SHEET 1 OF 1	
C367,1500 WCSB.DRW	10-DEC-81 14:40	NEXT HIGHER ASSEMBLY: B-DD-11730-0		
FIRST USED ON OPTION/MODEL: 11/730				

TITLE: NEBULA WCS, MEM & CONSOLE (WCSB)

SIZE	CODE	NUMBER	REV.
D	CS	M8394-0-WCSB	C

REVISIONS

C-#	CHANGE NO.	REV

D4 1N4004 D5 1N4004 D6 1N4004
CB2 -15V — WCSC V-
WCSC +VB
CU1 +15V — WCSC V+
D1 1N4004 D2 1N4004 D3 1N4004

WCSC CPU POWER OK H
WCSC 15V OK H
WCSA RESET L
74LS11 E28
E34 — R14 100Ω — WCSC DC ON L DN1
WCSB RUN H — E34 — R15 100Ω — WCSC RUN L DN1
WCSB AUTOTEST ACT H — E34 — R16 100Ω — WCSC REMOTE L DP1
AS1 PANEL REMOTE H — R25 100Ω — E34 — WCSC PANEL REMOTE L
C119 .047μF 50V
R32 1KΩ
74S240 E34

CONSOLE TERMINAL
J3
WCSC XMIT OUT 1 H
WCSC.REC IN 1

RD MODEM/APT HOST
J1
WCSN REM XMIT H
WCSC REM RCV H — WCSC REM S.RCV H
WCSN REM RTS H
WCSC REM CTS H — WCSN REM USER.TX H
WCSC REM DSR H — WCSN REM S.RTS H
WCSN REM DTR H
WCSC REM CAR H
WCSC REM RI H
WCSN REM DSRS H
WCSC REM S.CAR H — WCSC REM USEP.RX H
WCSB APT PRESENT L

TU58 DEVICE
J2
AR2 W2 WCSC XMIT OUT 2 H
WCSC REC IN 2
W1 AT2

NOTE: W1 AND W2 ARE INSERTED ONLY WHEN THIS MODULE IS INSTALLED IN THE 70-18080 BACKPLANE ASSEMBLY

L1 33 μh L2 1 μh
+5.0V — PANEL +5V FILT EP2
C2 .047μF 50V

R17 100Ω — EK2 PANEL BOOT H — C3 .047μF 50V — R18 1Kω — E34 — WCSC BOOT L
R19 100Ω — EL2 PANEL HALT H — C4 .047μF 50V — R20 1Kω — E34 — WCSC HALT L
R21 100Ω — EM2 PANEL DISABLE H — C5 .047μF 50V — R22 1Kω — E34 — WCSC DISABLE CTRL-P L
E34 — 74S240 E34

WCSA 300 H
WCSB REM SEL 1200 H
WCSA 1200 H
74S32 E116
74S08 E86
WCSB REM+/APT H
WCSA 38.4K H
74S51 E35 — WCSC REMOTE BAUD CK L

WCSC REC IN 1
WCSC REC IN 2
WCSC V-
9637 E26 — WCSC U1 DIN L
9637 E26 — WCSC U2 DIN L
R29 30Kω R30 30Kω C118 1000PF 250V

NOTE: R81-R88,R104 & R105 ARE METAL FILM PREC. RESISTORS RATED 1% TOLERANCE (EXCEPT R84 WHICH IS .1 %)

+5.0V
R78 75Ω 1/4W 5%
R79 430Ω 1/4W 5%
[+4.1V] Q1 2N2904A
R80 33Ω 1/4W 5%
[+3.9V]
D15 1N748A 3.9V .4W 5%
R81 909Ω 1/4W 1%
[+4.8V] Q2 2N2904A
R90 10Kω 1/4W 5%
D16 1N4004 [+3.2V] WCSC RESET 8085 L BA1
R91 1Kω 1/4W 5%
C88 .22μF 50V
R92 20Kω 1/4W 5%

+15V
R86 12.1Kω 1/4W 1%
R85 12.7Kω 1/4W 1%
R88 17.4Kω 1/4W 1%
-15V
R87 2.67Kω 1/4W 1%
R32 604Ω 1/4W 1%
[+2.9V] [+2.1V] LM339 E31 — R89 10Kω — [+4.4V] WCSC 15V OK H
[+2.6V] [+2.3V] LM339 E31

AU1 CPU +5V SENSE H
R83 604Ω 1/4W 1%
R84 1.8KΩ 1/4W .1%
R104 909Ω 1%
R105 1Kω 1%
[+2.3V] [+2.6V] E31 — R106 10Kω — [+4.4V] WCSC CPU POWER OK H

WCSC V-
WCSC V+
C6 .047μF 50V
VCC+
VCC-
WCSA U1 DOUT L — E13 — WCSC XMIT OUT 1 H
EIA LINE DRIVER 9636 E13
WCSA U2 DOUT L — E13 — WCSC XMIT OUT 2 H
WAVE SHAPE
R23 47Kω

(CONSOLE INTERFACE)

THIS DRAWING AND SPECIFICATIONS, AS AN UNPUBLISHED WORK OF DIGITAL EQUIPMENT CORPORATION, SHALL NOT BE REPRODUCED OR COPIED OR USED IN WHOLE OR IN PART AS THE BASIS FOR THE MANUFACTURE OR SALE OF ITEMS WITHOUT WRITTEN PERMISSION. COPYRIGHT © 1984 DIGITAL EQUIPMENT CORPORATION

REVISIONS
CHK | CHANGE NO. | REV

DRN [illegible] DATE 09-APR-82 | ENG. | DATE
CHK'D. | DATE | PCBRD LOCATION: | SHEET 1 OF 1
C:\67.1500\WCSC.DRW | 10-DEC-81 14:40 | NEXT HIGHER ASSEMBLY: B-DD-11730-0
FIRST USED ON OPTION/MODEL: 11/730

TITLE: NEBULA WCS, MEM & CONSOLE (WCSC)
SIZE D | CODE CS | NUMBER M8394-0-WCSC | REV. B

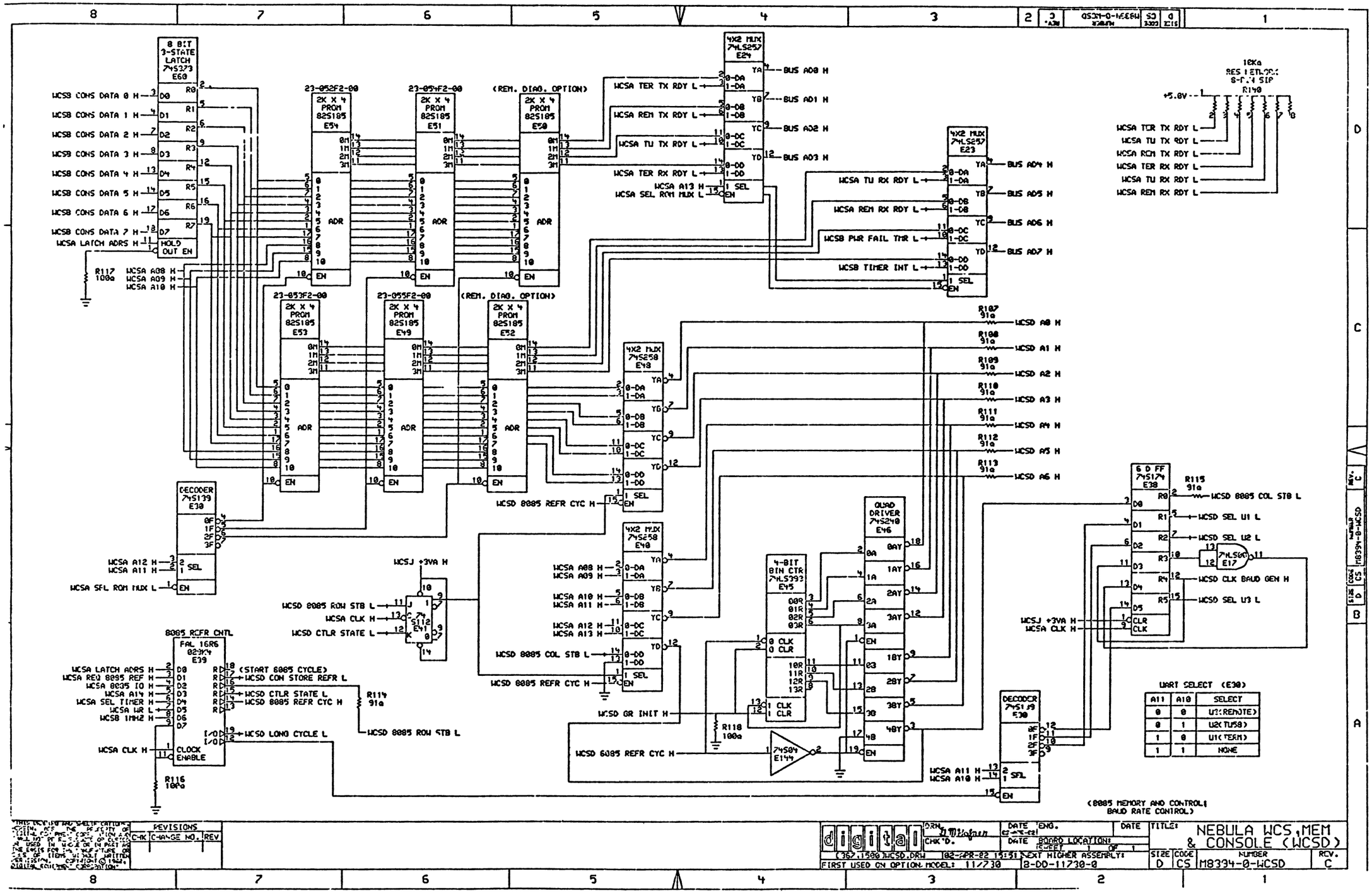
8 BIT 3-STATE LATCH 74S373 E60
WCSB CONS DATA 0 H
WCSB CONS DATA 1 H
WCSB CONS DATA 2 H
WCSB CONS DATA 3 H
WCSB CONS DATA 4 H
WCSB CONS DATA 5 H
WCSB CONS DATA 6 H
WCSB CONS DATA 7 H
WCSA LATCH ADRS H
HOLD OUT EN
R117 100a
WCSA A08 H
WCSA A09 H
WCSA A10 H
23-052F2-00
2K X 4 PROM 82S185 E54
23-054F2-00
2K X 4 PROM 82S185 E51
(REM. DIAG. OPTION)
2K X 4 PROM 82S185 E50
23-053F2-00
2K X 4 PROM 82S185 E53
23-055F2-00
2K X 4 PROM 82S185 E49
(REM. DIAG. OPTION)
2K X 4 PROM 82S185 E52
ADR
EN
4X2 MUX 74LS257 E24
WCSA TER TX RDY L
WCSA REM TX RDY L
WCSA TU TX RDY L
WCSA TER RX RDY L
WCSA A13 H
WCSA SEL ROM MUX L
BUS AD0 H
BUS AD1 H
BUS AD2 H
BUS AD3 H
4X2 MUX 74LS257 E23
WCSA TU RX RDY L
WCSA REM RX RDY L
WCSB PWR FAIL TMR L
WCSB TIMER INT L
BUS AD4 H
BUS AD5 H
BUS AD6 H
BUS AD7 H
10Ka RES NETWORK 8-PIN SIP R140
+5.0V
WCSA TER TX RDY L
WCSA TU TX RDY L
WCSA REM TX RDY L
WCSA TER RX RDY L
WCSA TU RX RDY L
WCSA REM RX RDY L
4X2 MUX 74S258 E48
WCSD 8085 REFR CYC H
R107 91a
WCSD A0 H
R108 91a
WCSD A1 H
R109 91a
WCSD A2 H
R110 91a
WCSD A3 H
R111 91a
WCSD A4 H
R112 91a
WCSD A5 H
R113 91a
WCSD A6 H
DECODER 74S139 E30
WCSA A12 H
WCSA A11 H
WCSA SEL ROM MUX L
WCSJ +3VA H
WCSD 8085 ROW STB L
WCSA CLK H
WCSD CTLR STATE L
74S112 E41
4X2 MUX 74S258 E40
WCSA A08 H
WCSA A09 H
WCSA A10 H
WCSA A11 H
WCSA A12 H
WCSA A13 H
WCSD 8085 COL STB L
WCSD 8085 REFR CYC H
QUAD DRIVER 74S240 E46
4-BIT BIN CTR 74LS393 E45
WCSD GR INIT H
R118 100a
WCSD 6085 REFR CYC H
74S04 E144
6 D FF 74S174 E38
R115 91a
WCSD 8085 COL STB L
WCSD SEL U1 L
WCSD SEL U2 L
74LS00 E17
WCSD CLK BAUD GEN H
WCSD SEL U3 L
WCSJ +3VA H
WCSA CLK H
8085 REFR CNTL FAL 16R6 029K4 E39
WCSA LATCH ADRS H
WCSA REQ 8085 REF H
WCSA 8085 IO H
WCSA A14 H
WCSA SEL TIMER H
WCSA WR L
WCSB 1MHZ H
WCSA CLK H
(START 8085 CYCLE)
WCSD CON STORE REFR L
WCSD CTLR STATE L
WCSD 8085 REFR CYC H
WCSD LONG CYCLE L
CLOCK ENABLE
R114 91a
WCSD 8085 ROW STB L
R116 100a
DECODER 74S139 E30
WCSA A11 H
WCSA A10 H
WART SELECT (E30)
A11 A10 SELECT
0 0 U3(REMOTE)
0 1 U2(TU58)
1 0 U1(TERM)
1 1 NONE
(8085 MEMORY AND CONTROL; BAUD RATE CONTROL)
REVISIONS
CHK CHANGE NO. REV
digital
DRN. D.M. Hofner
CHK'D.
DATE 02-APR-82
ENG.
DATE
BOARD LOCATION: SHEET 1 OF 1
(367.1500)WCSD.DRW 02-APR-82 15:51
FIRST USED ON OPTION MODEL: 11/730
NEXT HIGHER ASSEMBLY: B-DD-11730-0
TITLE: NEBULA WCS, MEM & CONSOLE (WCSD)
SIZE D CODE CS NUMBER M8394-0-WCSD REV. C

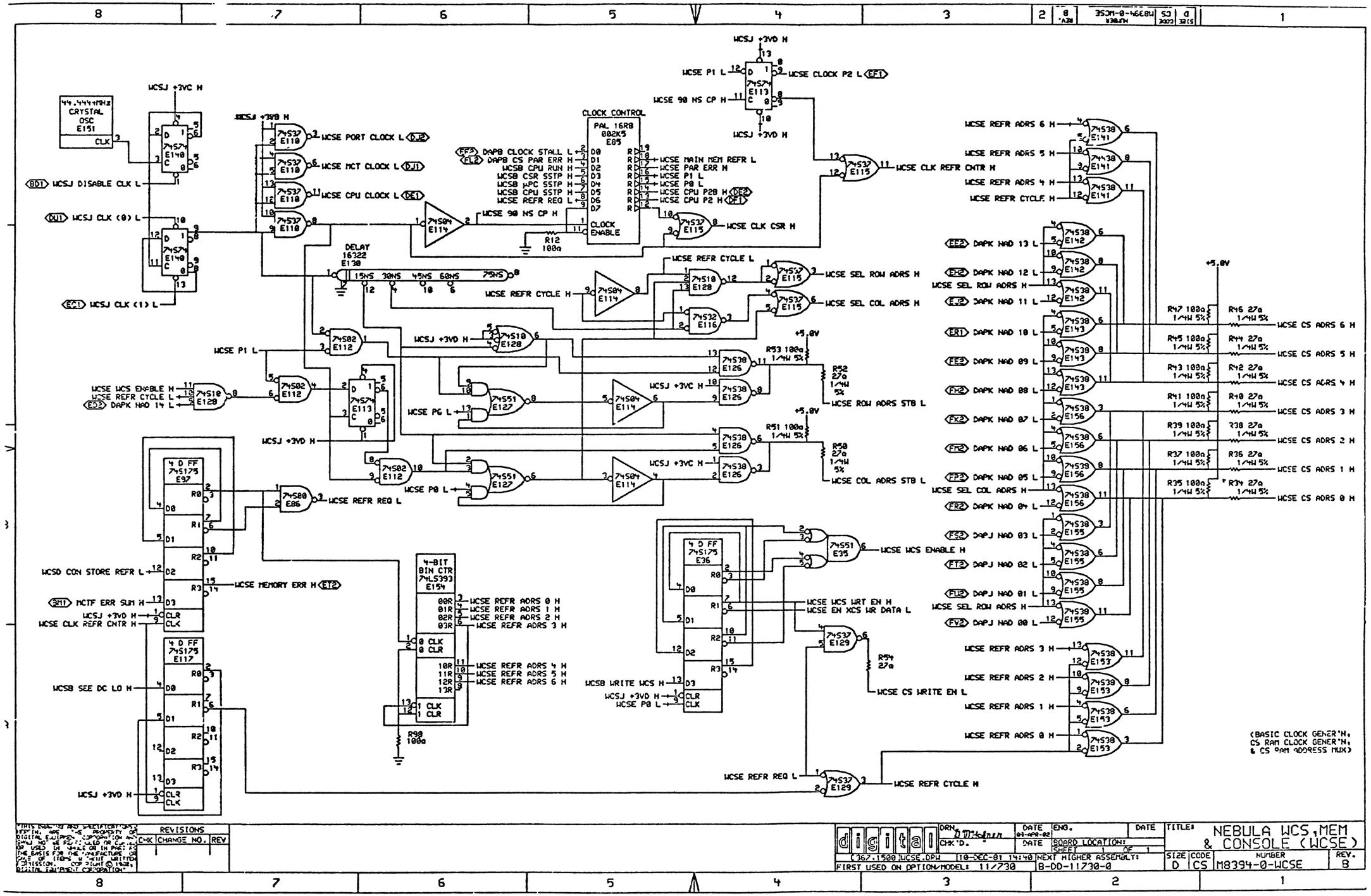

REVISIONS		
CHK	CHANGE NO.	REV

digital

DRN. D. McAdner | DATE 03-APR-82 | ENG. | DATE

CHK'D. | DATE | BOARD LOCATION: SHEET 1 OF 1

(367.1500)WCSE.DPW | 10-DEC-81 14:40 | NEXT HIGHER ASSEMBLY: B-DD-11730-0

FIRST USED ON OPTION/MODEL: 11/730

TITLE: NEBULA WCS, MEM & CONSOLE (WCSE)

SIZE	CODE	NUMBER	REV.
D	CS	M8394-0-WCSE	B

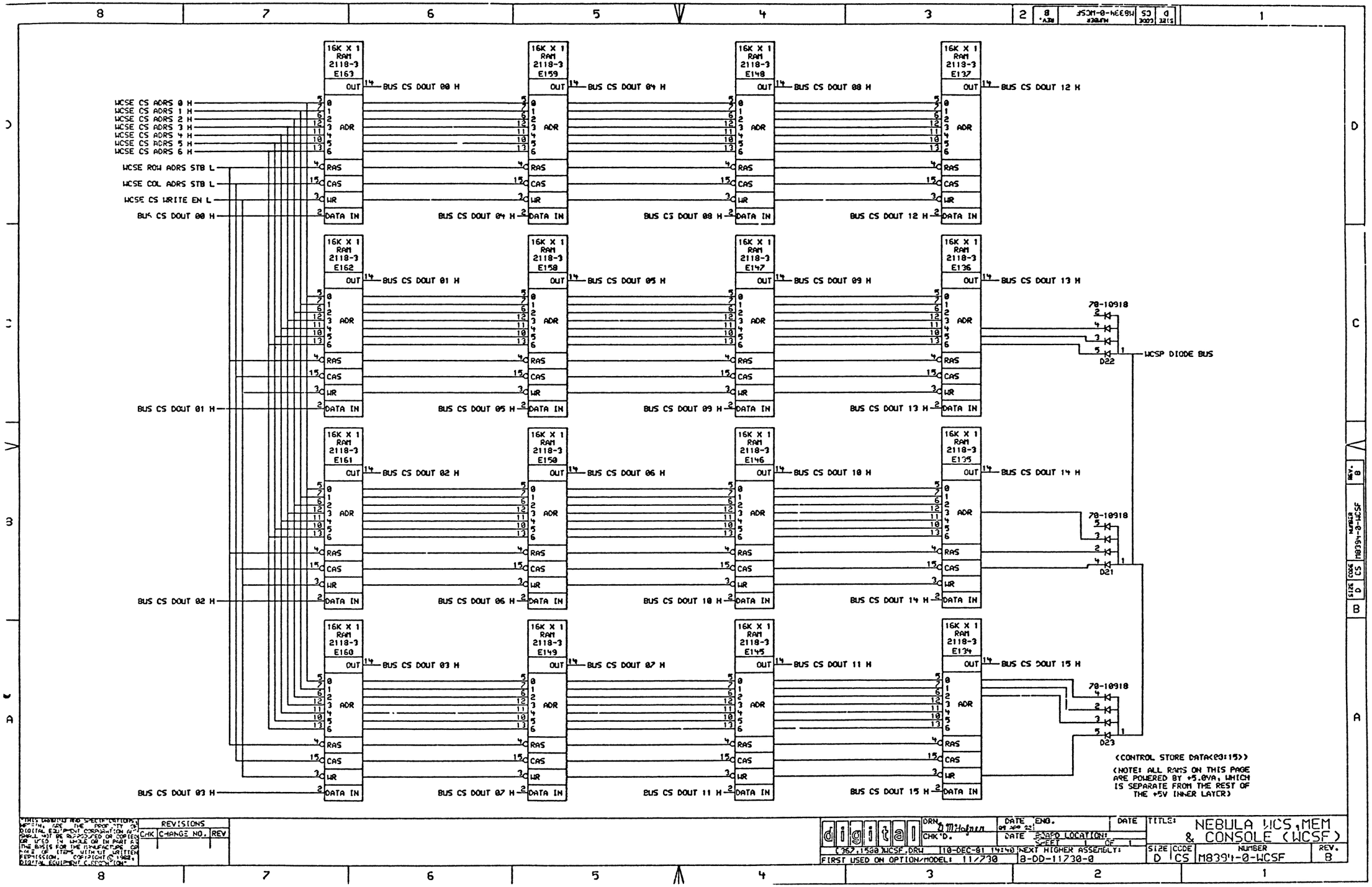

REVISIONS		
CHK	CHANGE NO.	REV

digital

DRN. D.M.Hofner | DATE 09 APR 82 | ENG. | DATE

CHK'D. | DATE | BOARD LOCATION: SHEET 1 OF 1

(367,1500)WCSF.DRW | 10-DEC-81 14:40 | NEXT HIGHER ASSEMBLY: B-DD-11730-0

FIRST USED ON OPTION/MODEL: 11/730

TITLE: NEBULA WCS,MEM & CONSOLE (WCSF)

SIZE	CODE	NUMBER	REV.
D	CS	M8394-0-WCSF	B

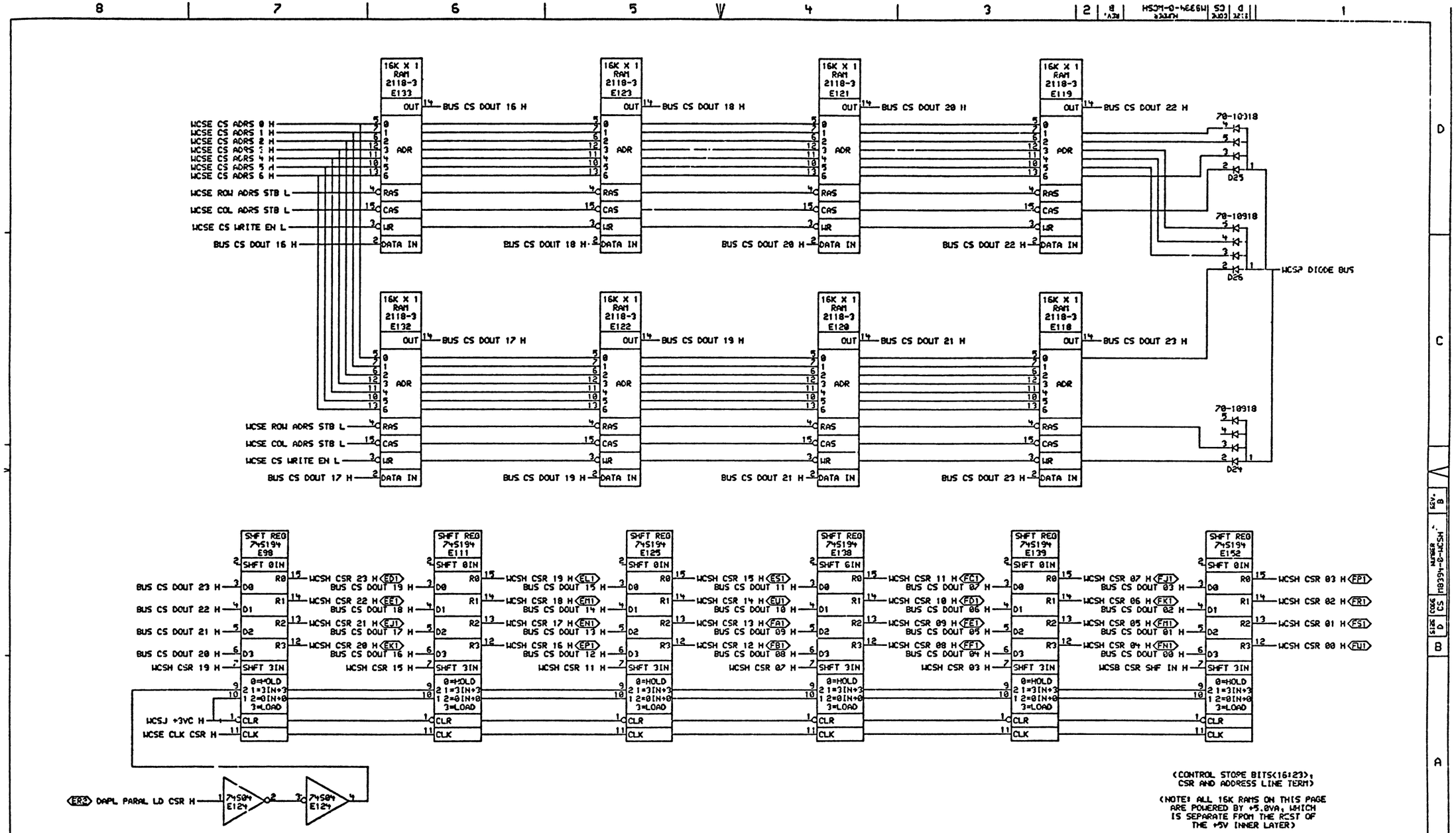

REVISIONS		
CHK	CHANGE NO.	REV

digital

DRN D.M.Hofner | DATE 09-APR-82 | ENG. | DATE

CHK'D. | DATE | BOARD LOCATION: SHEET 1 OF 1

(367,1530)WCSH.DPW | 19-DEC-81 14:40 | NEXT HIGHER ASSEMBLY: B-DD-11730-0

FIRST USED ON OPTION/MODEL: 11/730

TITLE: NEBULA WCS,MEM & CONSOLE (WCSH)

SIZE	CODE	NUMBER	REV.
D	CS	M8394-0-WCSH	B

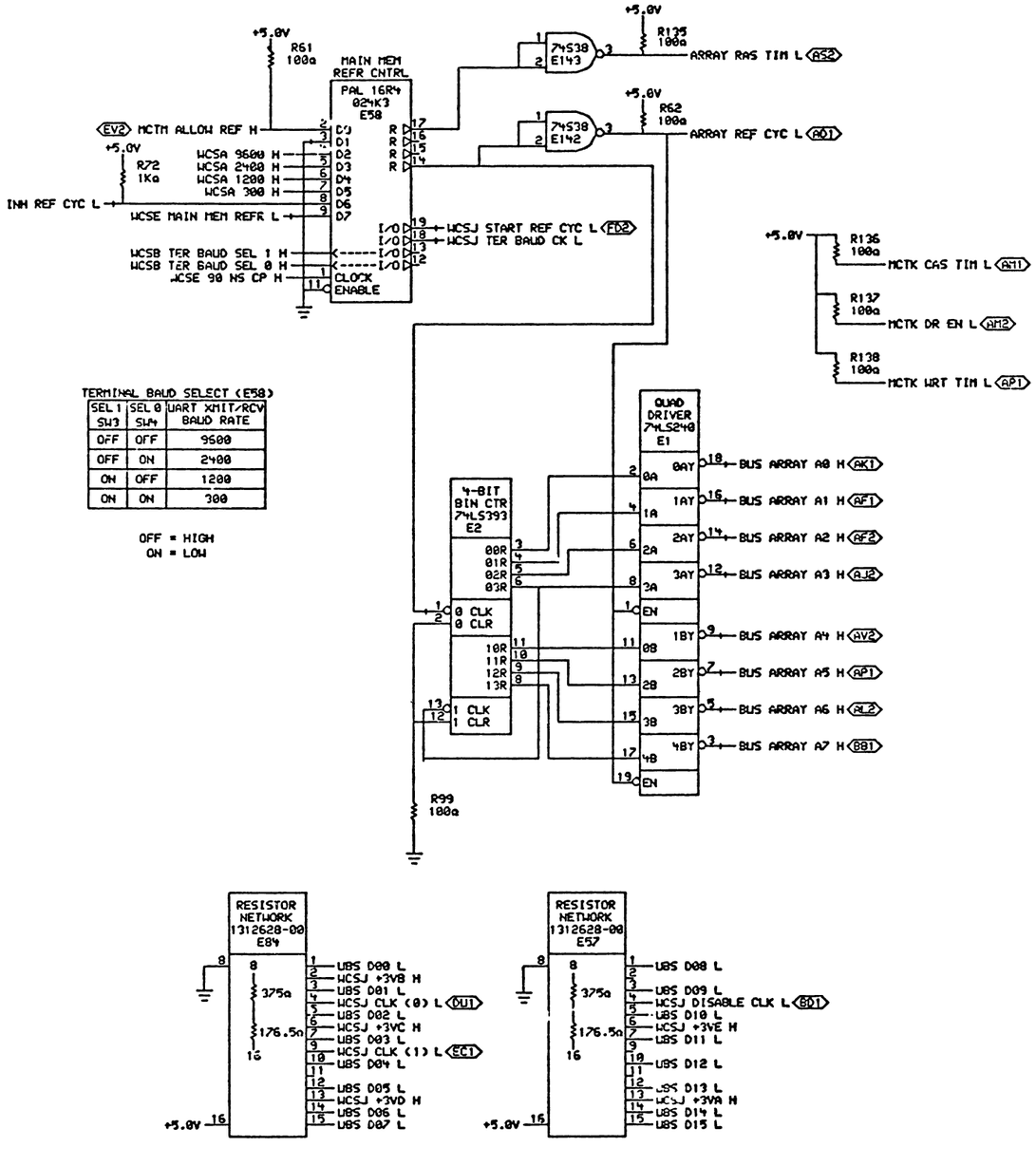

REVISIONS		
CHK	CHANGE NO.	REV

DRN. M.M.Holmes	DATE 24-SEP-81	ENG.	DATE
CHK'D.	DATE	BOARD LOCATION: SHEET 1 OF 1	
C:367,1500 WCSJ.DRW	18-DEC-81 14:40	NEXT HIGHER ASSEMBLY: B-DD-11730-0	
FIRST USED ON OPTION/MODEL: 11/730			

TITLE: NEBULA WCS, MEM & CONSOLE (WCSJ)

SIZE	CODE	NUMBER	REV.
D	CS	M8394-0-WCSJ	B

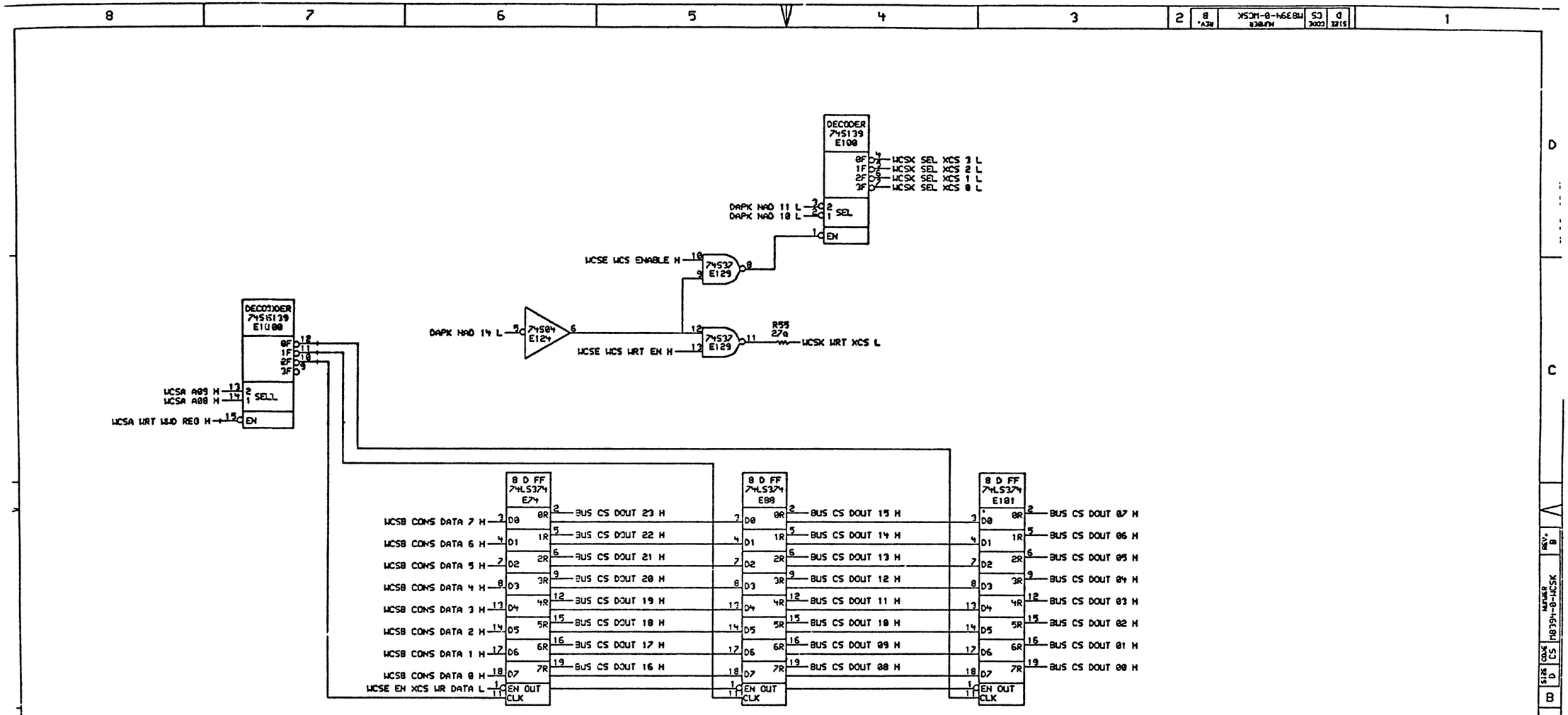

REVISIONS		
CHK	CHANGE NO.	REV

digital

DRN D.M.Hofner | DATE 09-APR-82 | ENG. | DATE

CHK'D. | DATE | BOARD LOCATION: SHEET 1 OF 1

(367.1500) WCSK.DRW 10-DEC-81 14:40 | NEXT HIGHER ASSEMBLY: B-DD-11730-0

FIRST USED ON OPTION/MODEL: 11/730

TITLE: NEBULA WCS, MEM & CONSOLE (WCSK)

SIZE	CODE	NUMBER	REV.
D	CS	M8394-0-WCSK	B

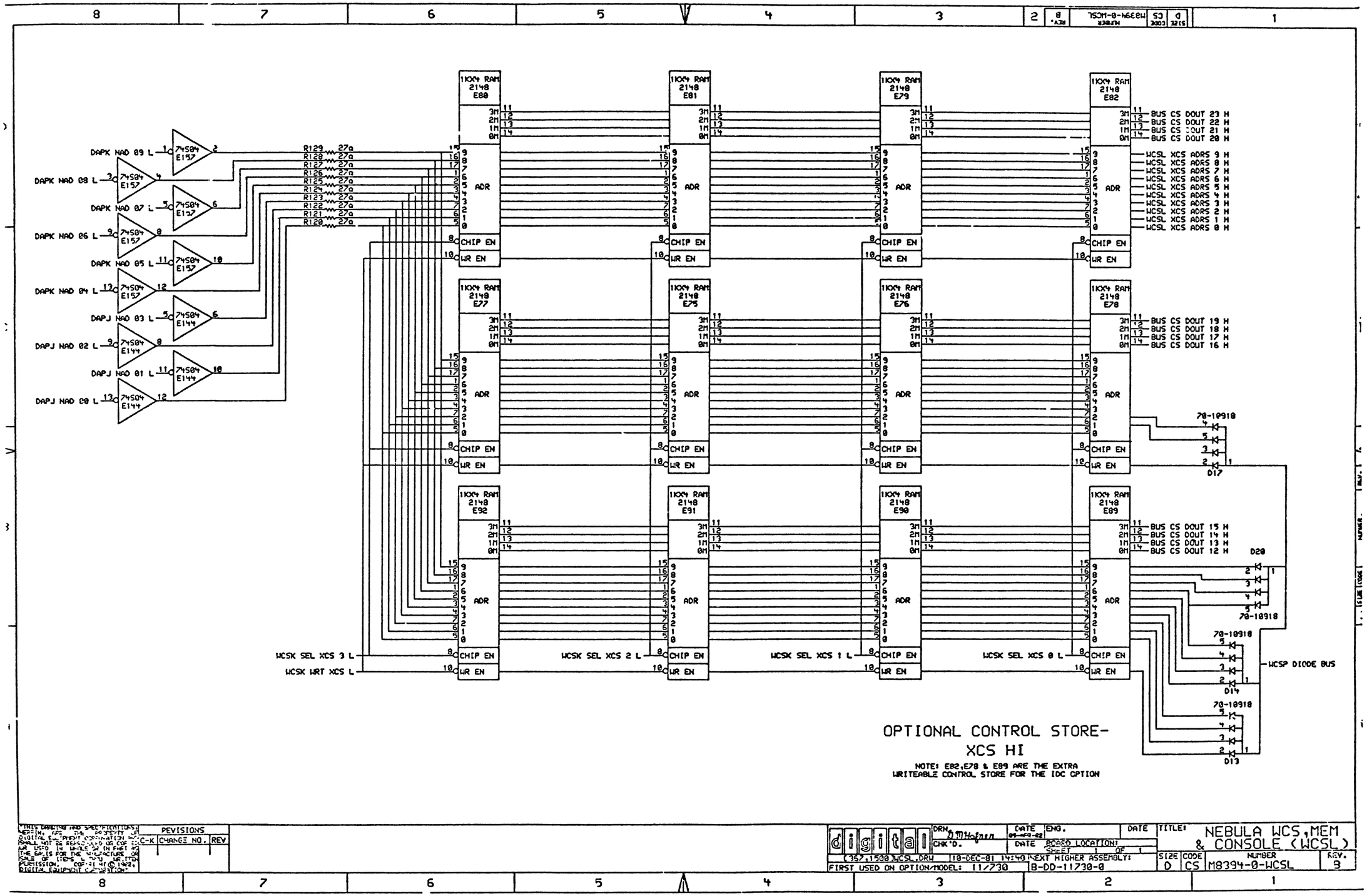

OPTIONAL CONTROL STORE-
XCS HI

NOTE: E82,E78 & E89 ARE THE EXTRA WRITEABLE CONTROL STORE FOR THE IDC OPTION

REVISIONS		
C-K	CHANGE NO.	REV

digital

DRN. D.M.Hofner | DATE 09-FEB-82 | ENG. | DATE

CHK'D. | DATE | BOARD LOCATION: SHEET 1 OF 1

(367,1500)WCSL.DRW 10-DEC-81 14:40 | NEXT HIGHER ASSEMBLY: B-DD-11730-0

FIRST USED ON OPTION/MODEL: 11/730

TITLE: NEBULA WCS,MEM & CONSOLE (WCSL)

SIZE	CODE	NUMBER	REV.
D	CS	M8394-0-WCSL	B

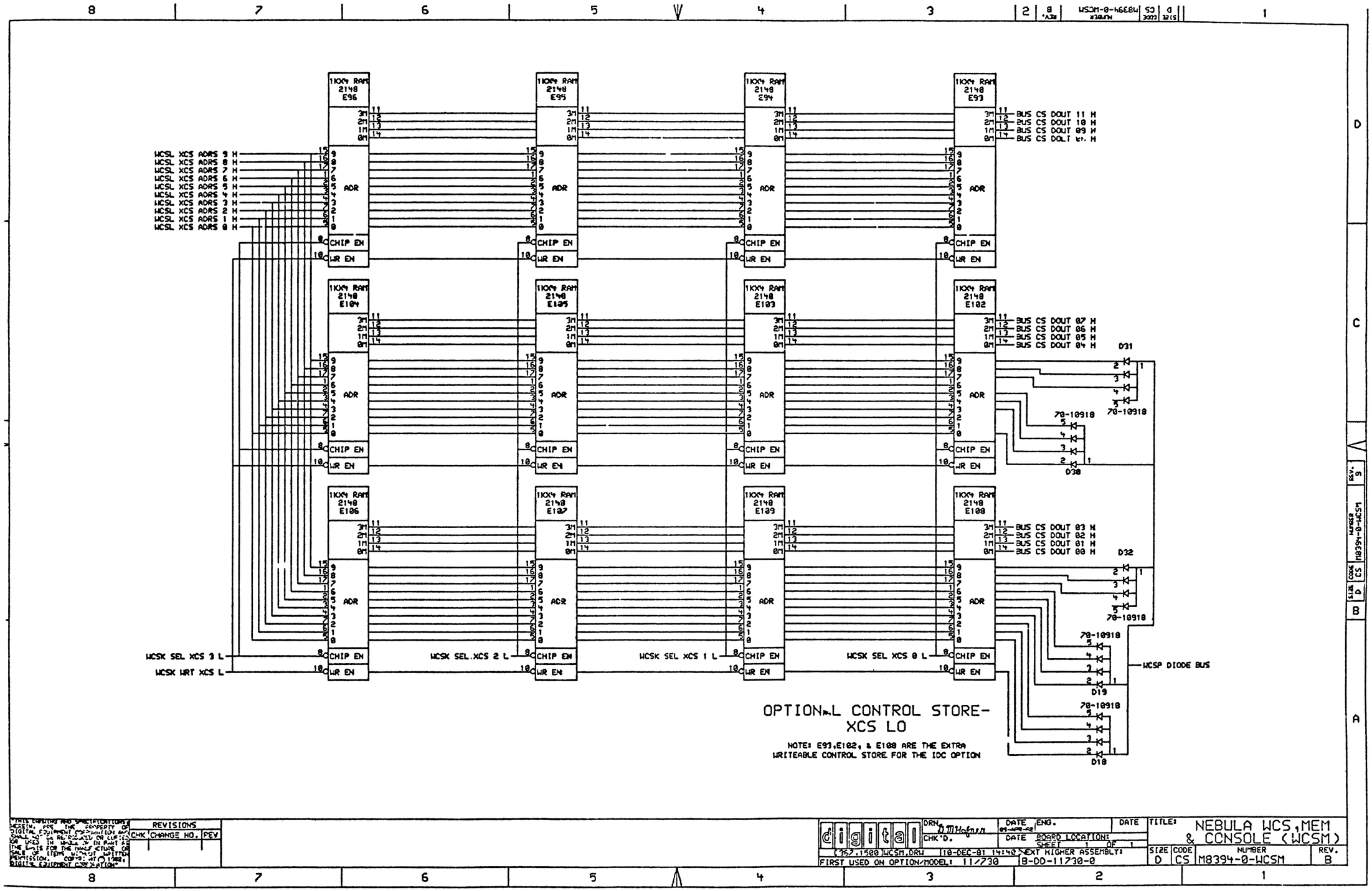

REVISIONS		
CHK	CHANGE NO.	REV

digital

DRN. D M Hofner | DATE 09-APR-82 | ENG. | DATE

CHK'D. | DATE | BOARD LOCATION: SHEET 1 OF 1

(367,1500)WCSM.DRW | 10-DEC-81 14:40 | NEXT HIGHER ASSEMBLY: B-DD-11730-0

FIRST USED ON OPTION/MODEL: 11/730

TITLE: NEBULA WCS,MEM & CONSOLE (WCSM)

SIZE	CODE	NUMBER	REV.
D	CS	M8394-0-WCSM	B

"THIS DRAWING AND SPECIFICATIONS HEREIN, ARE THE PROPERTY OF DIGITAL EQUIPMENT CORPORATION AND SHALL NOT BE REPRODUCED OR COPIED OR USED IN WHOLE OR IN PART AS THE BASIS FOR THE MANUFACTURE OR SALE OF ITEMS WITHOUT WRITTEN PERMISSION. COPYRIGHT © 1982, DIGITAL EQUIPMENT CORPORATION"

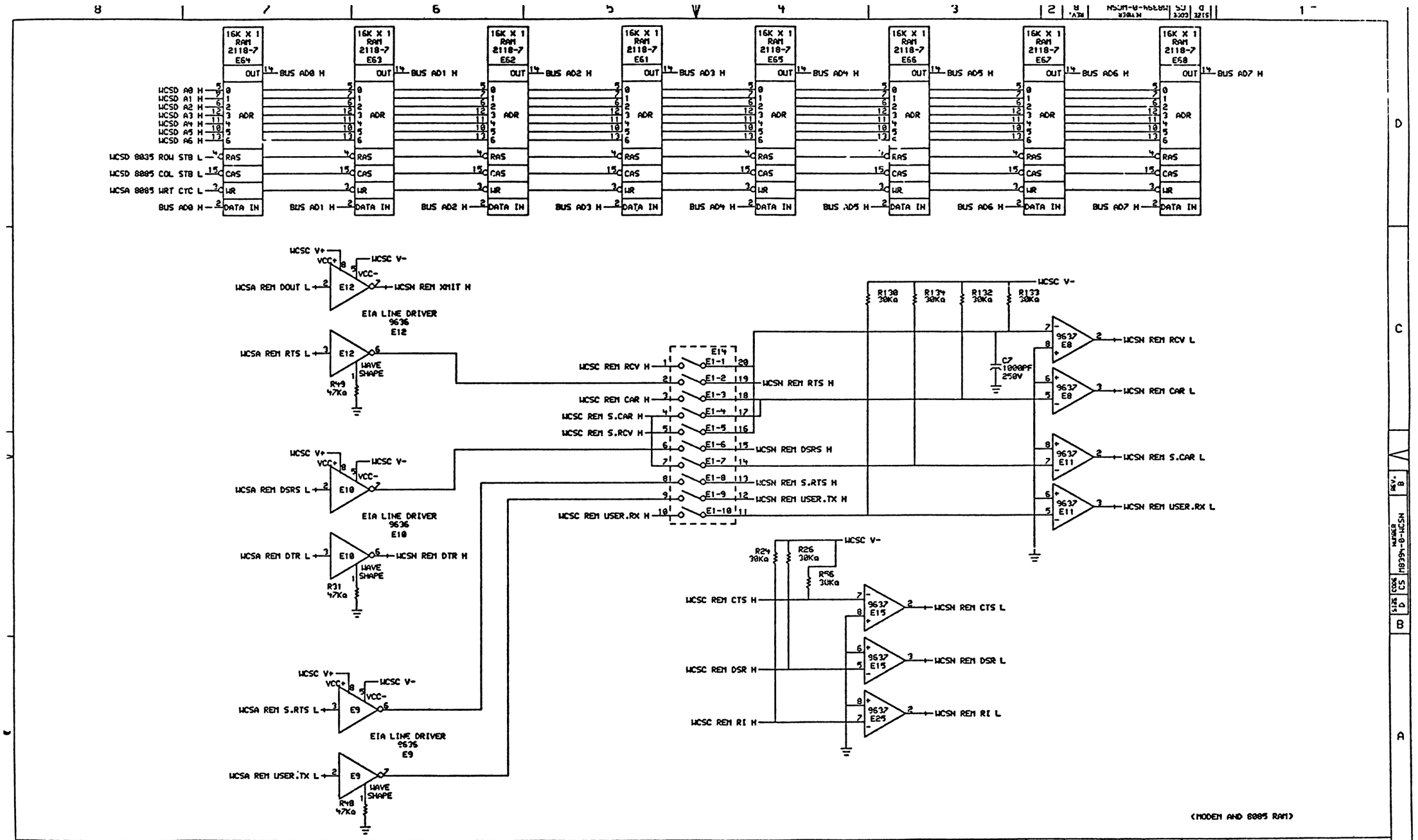

DRN. D.M.Hojner	DATE 09-APR-82	ENG.	DATE	TITLE: NEBULA WCS,MEM & CONSOLE (WCSN)	
CHK'D.	DATE	BOARD LOCATION: SHEET 1 OF 1			
(367,1500)WCSN.DPW	10-DEC-81 14:40	NEXT HIGHER ASSEMBLY: B-DD-11730-0		SIZE D	CODE CS
FIRST USED ON OPTION/MODEL: 11/730				NUMBER M8394-0-WCSN	REV. B

REVISIONS

CHK	CHANGE NO.	REV

THIS DRAWING AND SPECIFICATIONS HEREIN, ARE THE PROPERTY OF DIGITAL EQUIPMENT CORPORATION AND SHALL NOT BE REPRODUCED OR COPIED OR USED IN WHOLE OR IN PART AS THE BASIS FOR THE MANUFACTURE OR SALE OF ITEMS WITHOUT WRITTEN PERMISSION. COPYRIGHT © 1982, DIGITAL EQUIPMENT CORPORATION

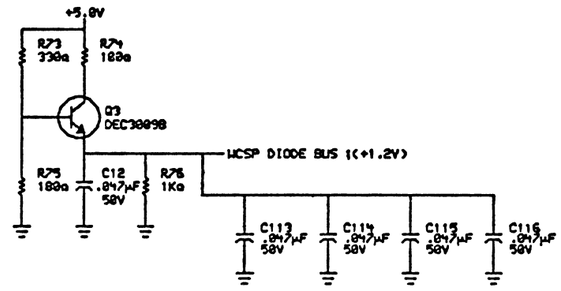

(DIODE BUS FOR ADDRESS LINE TERMINATION)

"THIS DRAWING AND SPECIFICATIONS, HEREIN, ARE THE PROPERTY OF DIGITAL EQUIPMENT CORPORATION AND SHALL NOT BE REPRODUCED OR COPIED OR USED IN WHOLE OR IN PART AS THE BASIS FOR THE MANUFACTURE OR SALE OF ITEMS WITHOUT WRITTEN PERMISSION. COPYRIGHT © 1982, DIGITAL EQUIPMENT CORPORATION"

REVISIONS		
CHK	CHANGE NO.	REV

digital

DRN. D M Hofner | DATE 09-APR-82 | ENG. | DATE
CHK'D. | DATE | BOARD LOCATION: SHEET 1 OF 1
(367,1500)WCSP.DRW | 10-DEC-81 14:43 | NEXT HIGHER ASSEMBLY: B-DD-11730-0
FIRST USED ON OPTION/MODEL: 11/730

TITLE: NEBULA WCS,MEM & CONSOLE (WCSP)

SIZE	CODE	NUMBER	REV.
D	CS	M8394-0-WCSP	B

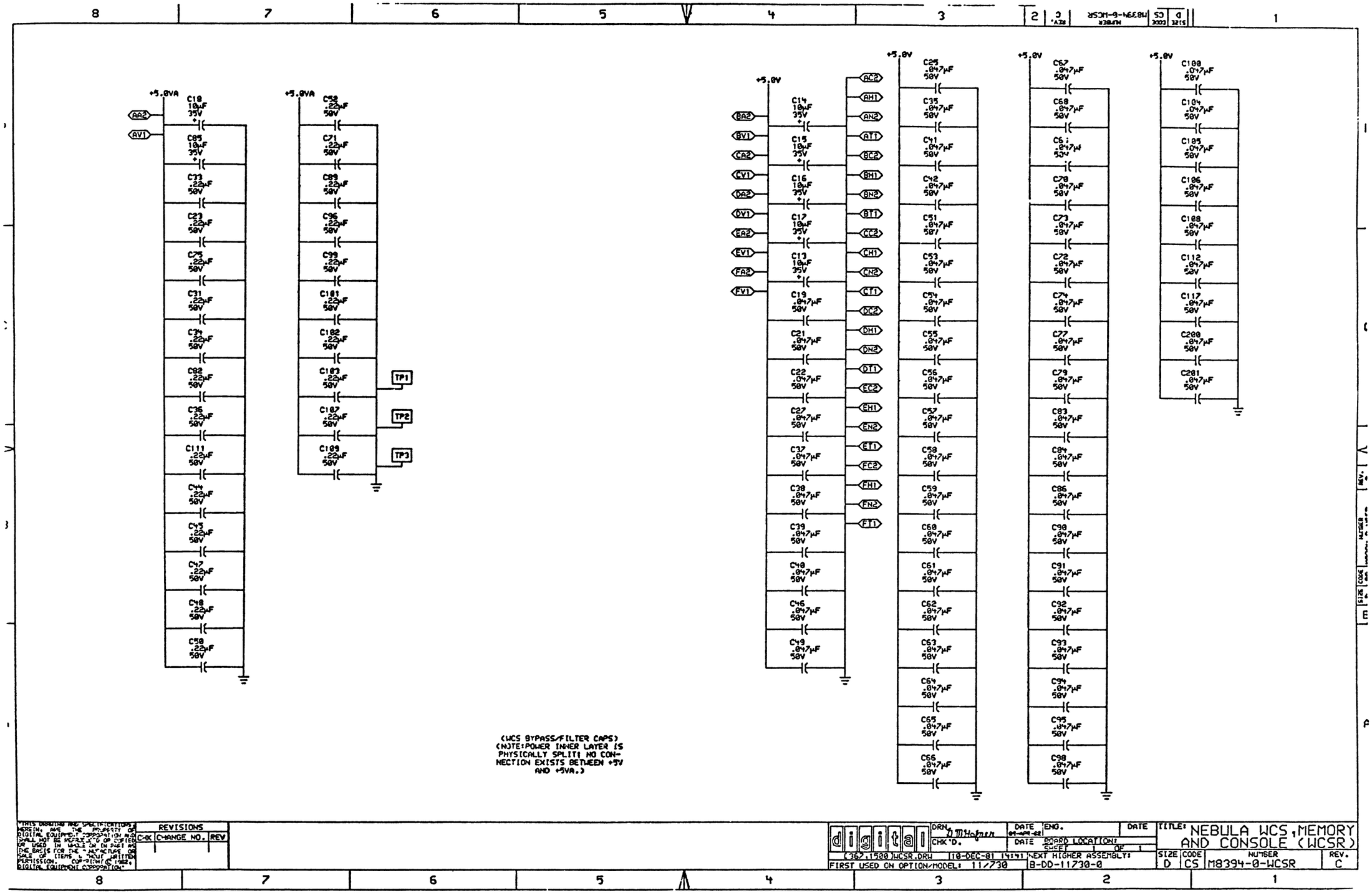

"THIS DRAWING AND SPECIFICATIONS HEREIN, ARE THE PROPERTY OF DIGITAL EQUIPMENT CORPORATION AND SHALL NOT BE REPRODUCED OR COPIED OR USED IN WHOLE OR IN PART AS THE BASIS FOR THE MANUFACTURE OR SALE OF ITEMS WITHOUT WRITTEN PERMISSION. COPYRIGHT © 1982, DIGITAL EQUIPMENT CORPORATION"

REVISIONS		
CHK	CHANGE NO.	REV

digital

DRN. D.M.Hofner | DATE 09-APR-82 | ENG. | DATE
CHK'D. | DATE | BOARD LOCATION: SHEET 1 OF 1

(367,1500)WCSR.DRW | 10-DEC-81 14:41 | NEXT HIGHER ASSEMBLY: B-DD-11730-0

FIRST USED ON OPTION/MODEL: 11/730

TITLE: NEBULA WCS, MEMORY AND CONSOLE (WCSR)

SIZE	CODE	NUMBER	REV.
D	CS	M8394-0-WCSR	C

PART NUMBER: 23-045J5-

DEVICE TYPE: PAL16L8

SCHEMATIC SHEET #:D-CS -M8394-0-WCSA

LOCATION/DESCRIPTION: E21/ ADDRESS DECODE
ASSIGNED PIN NUMBER:

1= A7	8=/RD	15= WRT.WND.REG
2= A6	9=/WR	16=/WRITE.M1
3= A5	10= GROUND	17=/SEL.STATUS
4= A4	11=/TSE	18=/SEL.ROM.MUX
5= A3	12= DIR	19=/SEL.CPU.REGS
6= IO	13= SEL.TIMER	20= VCC
7= NC	14=/WRITE.M0	

EQUATIONS:

IF(TSE) SEL.CPU.REGS:= IO=A7*/A6*/A5*/A4*/A3*RD
+IO=A7*WR

IF(TSE) SEL.ROM.MUX:= /IO=A7*/A6*/A5*RD
+IO=/A7*/A6*A5*RD

IF(TSE) SEL.STATUS:= IO=A7*/A6*A5*/A4*/A3*RD

IF(TSE) WRITE.M1:= IO=A7*A6*A5*A4*WR

IF(TSE) /WRT.WND.REG:= IO=A7*/A6*/A5*/A4*A3*WR

IF(TSE) WRITE.M0:= IO=A7*A6*A5*/A4*WR

IF(TSE) /SEL.TIMER:= /IO
+A7
+A5
+/A4
+/A3

IF(TSE) /DIR:= IO=/A7*A6*/A5*/A4*/A3*RD

PART NUMBER: 23-024K3-00

DEVICE TYPE: PAL16R4

SCHEMATIC SHEET #:D-CS-M8394-0-WCSJ

LOCATION/DESCRIPTION: E58/ MEMORY REFRESH CONTROL AND SEQUENCER

ASSIGNED PIN NUMBER:

1= REGISTER.CLK	8=/INHIBIT.REFRESH	15=/REFR.PENDING
2= ALLOW.REFR.CYC	9=/REFR.REQUEST	16=/STATE
3= PRELOAD	10= GROUND	17= RAS
4= 9600.BAUD	11= REG.OUT.EN	18= TERM.BAUD
5= 2400.BAUD	12= BAUD.SEL.0	19=/START.REFR.CYC
6= 1200.BAUD	13= BAUD.SEL.1	20= V
7= 300.BAUD	14= REFR.CYCLE	

EQUATIONS:

IF(VCC) START.REFR.CYC:=REFR.PENDING*ALLOW.REFR.CYC
+STATE
+REFR.CYCLE

STATE:=REFR.PENDING*/REFR.CYCLE*/STATE*ALLOW.REFR.CYC*/PRELOAD
+REFR.PENDING*RAS*/PRELOAD
+PRELOAD*ALLOW.REFR.CYC

REFR.PENDING:=REFR.REQUEST*/REFR.PENDING*/REFR.CYCLE
/INHIBIT.REFRESH/PRELOAD
+REFR.PENDING*/RAS*/PRELOAD
+PRELOAD=INHIBIT.REFRESH

/REFR.CYCLE:=/REFR.PENDING*/RAS*/PRELOAD
+/REFR.CYCLE*/STATE*/PRELOAD
+PRELOAD*REFR.REQUEST

/RAS:=/REFR.PENDING*/STATE*/PRELOAD
+/REFR.CYCLE*/PRELOAD
+PRELOAD=BAUD.SEL.0

IF(VCC) /TERM.BAUD:=/BAUD.SEL.1*/BAUD.SEL.0*300.BAUD
+/BAUD.SEL.1*BAUD.SEL.0*1200.BAUD
+BAUD.SEL.1*/BAUD.SEL.0*9600.BAUD
+BAUD.SEL.1*BAUD.SEL.0*9600.BALD

PART NUMBER: 23-024K4-00

DEVICE TYPE: PAL16R6

SCHEMATIC SHEET #:D-CS-M8394-0-WCSD

LOCATION/DESCRIPTION: E39/ MICRO PROCESSOR DYNAMIC RAM CONTROLLER

ASSIGNED PIN NUMBER:

1= CLOCK	8= NC	15= STATE
2= ALE	9= RESET	16=/RAS
3= REQUEST.REFR	10= GROUND	17= REFRESH.DONE
4= IO	11= OUT.EN	18=/START.8085.CYC
5= A14	12=/UART.CHIP.SEL	19=/LONG.CYCLE
6= NC	13=/UART.ENA	20= VCC
7= NC	14= REFRESH.CYC	

EQUATIONS:

START.8085.CYC:=ALE
+REFRESH.CYC*START.8085.CYC*A14

RAS:=/RAS*REFRESH.CYC
+RAS*STATE
+START.8085.CYC*/RAS*/IO*A14
+RESET

/STATE:=/START.8085.CYC
+RAS
+/A14

/REFRESH.CYC:=START.8085.CYC
+RAS*REFRESH.CYC
+RAS*STATE
+/REFRESH.CYC*/REQUEST.REFR
+/REFRESH.CYC*REFRESH.DONE
+/REFRESH.CYC*/RAS*ALE*/STATE
+UART.ENA
+RESET

/REFRESH.DONE:=/REQUEST.REFR
+/REFRESH.DONE*/REFRESH.CYC

IF(VCC)LONG.CYCLE:=START.8085.CYC*A14

IF(VCC)UART.CHIP.SEL:=START.8085.CYC*IO*A14*/RAS
+/RAS*STATE

UART.ENA:=START.8085.CYC*IO*A14*/RAS
+/RAS*STATE

23-045J5-00
23-024K3-00
23-024K4-00

REVISIONS		
CHK	CHANGE NO.	REV

THIS DRAWING AND SPECIFICATIONS, AS AN UNPUBLISHED WORK OF DIGITAL EQUIPMENT CORPORATION (DEC), ARE THE PROPERTY OF DEC AND SHALL NOT BE REPRODUCED OR COPIED OR USED IN WHOLE OR IN PART AS THE BASIS FOR MANUFACTURE OR SALE OF ITEMS WITHOUT WRITTEN PERMISSION. COPYRIGHT 1984 BY DIGITAL EQUIPMENT CORPORATION

digital

DRN: J.M.Hafner DATE: 10-DEC-81
CHK: D. DATE:
ENG. DATE
ISSUED LOCATION: B-DEC 1 OF 2
DSK:GLCSB1.TZK[1186,1259] 10-DEC-81 10:29
FIRST USED ON OPTION/MODEL: 11/730
NEXT HIGHER ASSEMBLY: B-DD-M8394-0-0

TITLE: WCS ROM AND PAL LISTINGS

SIZE	CODE	NUMBER	REV.
D	GL	M8394-0-0	A

8 7 6 5 4 3 2 1

PART NUMBER: 23-002K5-00

DEVICE TYPE: PAL16R8

SCHEMATIC SHEET #:D-CS-M8394-0-WCSE

LOCATION/DESCRIPTION: E85/ CLOCK CONTROL AND SINGLE STEP

ASSIGNED PIN NUMBER:

1= REGISTER.CLOCK.H	8=/REFR.REQ	15=/P0
2=/STALL	9= RESET	16=/P1
3= CSPE	10= GROUND	17= PAR.ERR
4= CPU.RUN	11= REG.OUT.EN.L	18=/MAIN.MEM.REFR.REQ
5= CSR.STEP	12= CLK.CSR	19=/WAIT
6= UPC.STEP	13= CLK.CPU	20= VCC
7= CPU.STEP	14= CLK.UPC	

EQUATIONS:

```
WAIT:= CSR.STEP*CLK.CSR
     +WAIT*CSR.STEP
     +UPC.STEP*CLK.UPC
     +WAIT*UPC.STEP
     +CPU.STEP*CLK.CPU
     +WAIT*CPU.STEP
     +RESET

MAIN.MEM.REFR.REQ:= REFR.REQ*/P0*/P1

/PAR.ERR:= P0*/PAR.ERR
     +P1*/PAR.ERR
     +/P0*/P1*/CSPE
     +RESET

P1:= P0
     +RESET

P0:= /P0*/P1
     +RESET

/CLK.UPC:= /P1
     +STALL*CPU.RUN
     +STALL*CPU.STEP
     +REFR.REQ
     +/CPU.RUN*/UPC.STEP*/CPU.STEP
     +/CPU.RUN*WAIT
     +RESET

/CLK.CPU:= /P1
     +STALL
     +REFR.REQ
     +/CPU.RUN*/CPU.STEP
     +/CPU.RUN*WAIT
     +RESET

/CLK.CSR:= /P1
     +STALL*CPU.RUN
     +STALL*CPU.STEP
     +REFR.REQ
     +/CPU.RUN*/CSR.STEP*/CPU.STEP
     +/CPU.RUN*WAIT
     +RESET
```

23-002K5-00

REVISIONS		
CHK	CHANGE NO.	REV

digital

DRN. G. McHafner DATE 10-DEC-81 ENG. DATE

CHK'D. DATE BOARD LOCATION: SHEET 2 OF 2

DSK:GLCSE.TZP[1106,15003] 10-DEC-81 10:29

FIRST USED ON OPTION/MODEL: 11/730

NEXT HIGHER ASSEMBLY: B-DD-M8394-0-0

TITLE: WCS ROM AND PAL LISTINGS

SIZE	CODE	NUMBER	REV.
D	GL	M8394-0-0	A

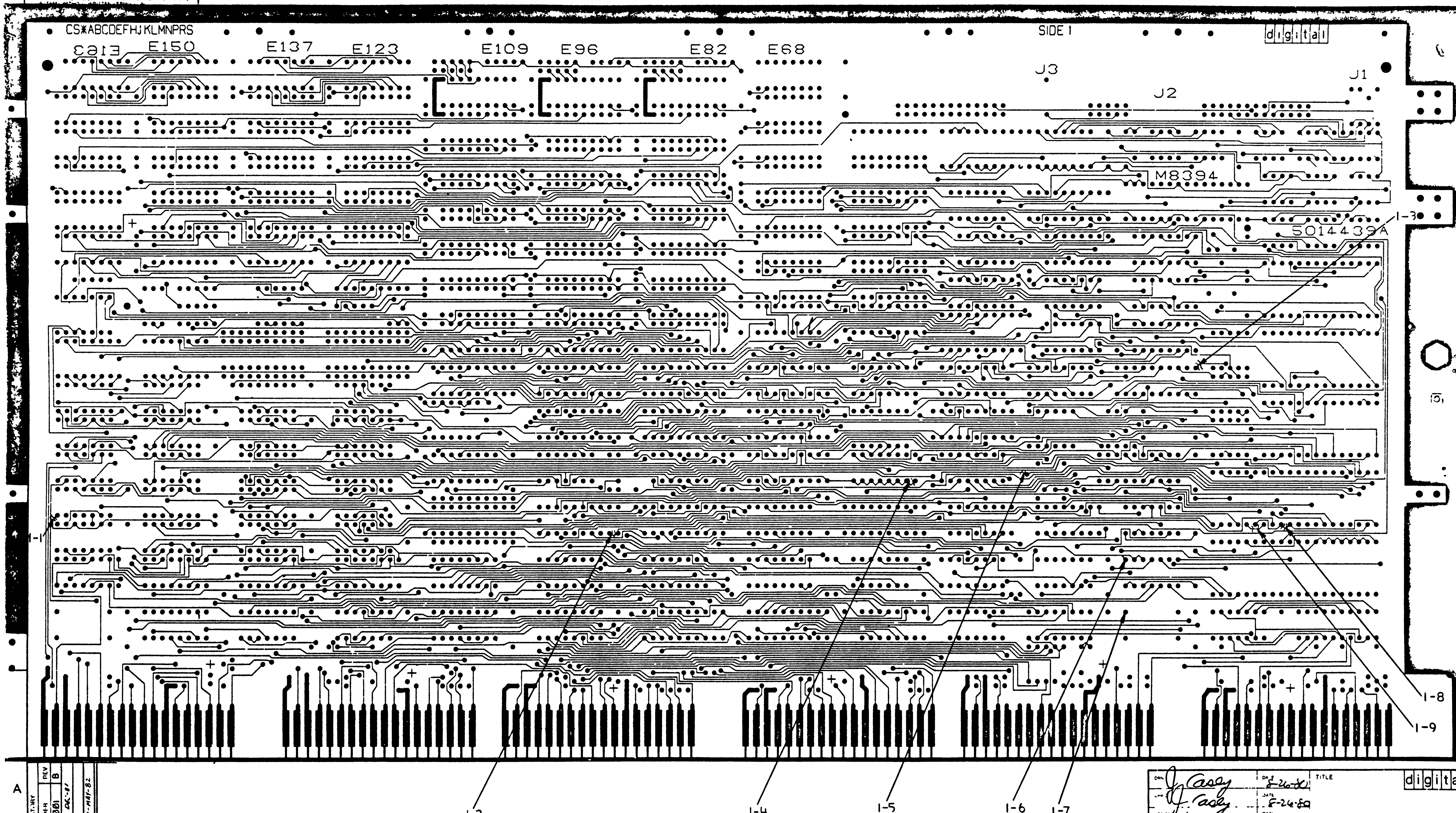

REVISION HISTORY		
DATE	ECO NUMBER	REV
	M8394-TW001	B
N DEC-81		
R. DAY		
21-MAY-82		

DRN	J Casey — DATE 8-26-80
CHK	J Casey — DATE 8-26-80
ES ENG	DATE
MFG ENG	DATE
MFG ENG	DATE

TITLE: ETCH CUT DRAWING

digital

DOCUMENT NUMBER: D EC 5014439-0-0 B

LAYER 4

5014439A
WCS SIDE 2

1-13

1-10

1-12

1-14

REVISION HISTORY		
DATE	ECO # NUMBER	REV

TITLE: ETCH CUT DRAWING

DEC 5014439-0-0 B

SHEET 2 OF 3

DEC 5014439-0-0 B

THIS DRAWING AND SPECIFICATIONS, HEREIN, ARE THE PROPERTY OF DIGITAL EQUIPMENT CORPORATION AND SHALL NOT BE REPRODUCED OR COPIED OR USED IN WHOLE OR IN PART AS THE BASIS FOR THE MANUFACTURE OR SALE OF ITEMS WITHOUT WRITTEN PERMISSION.
COPYRIGHT ©
DIGITAL EQUIPMENT CORPORATION

REWORK INSTRUCTIONS

ECO #1

ETCH CUTS SIDE 1:

1-1 NEAR E154-01 GOING FROM E154-01 TO E153-12.
1-2 BETWEEN E85-09 GOING TO E85-10.
1-3 NEAR E21-11 GOING FROM E21-11 TO E19-01.
1-4 BETWEEN E47-07 GOING TO E47-08.
1-5 NEAR PTH TO THE LEFT OF R66 SEPARATING ETCH FROM E38-01 AND E19-19.
1-6 DRILL OUT PTH AT E17-14.
1-7 DRILL OUT PTH AT E16-4.
1-8 BETWEEN E4-09 GOING TO E4-10.
1-9 BETWEEN E4-09 GOING TO E4-06.

ETCH CUTS SIDE 2

1-10 NEAR E129-02 GOING FROM E129-02 TO E128-03.
1-11 BETWEEN E128-10 GOING TO E129-05.
1-12 BETWEEN E128-10 AND PTH GOING TO E86-03.
1-13 NEAR BOTTOM OF R94 GOING TO J1-26.
1-14 BETWEEN E3-01 GOING TO E2-14.

REVISION HISTORY

DATE	ECO NUMBER	REV

TITLE: ETCH CUT DRAWING

DOCUMENT NUMBER

SIZE	CODE	NUMBER	REV.
D	EC	5014439-0-0	B

SCALE NONE SHEET 3 OF 3

SIZE	CODE	NUMBER	REV.
B	DD	G7273 - 0	*

DRAWING NO.	NO. OF SHTS.	PART NO.	DESCRIPTION	REVISIONS
		G7273	MODULE REVISION	*
B-DD-G7273-0	1		DOUBLE GRANT	*
D-UA-G7273-0-C	3		DOUBLE GRANT	*
K-FL-G7273-0-DBP	1		DOUBLE GRANT	*
D-MD-5013871-0-C	3		DRILL AND ETCH DRAWING	*
		5013871	ETCHED BOARD	A
K-FC-G7273-0-DBG			FC DESIGN DATA BASE	A

NOTES:

REVISIONS	
REV.	
CHG NO.	
DATE	

"THIS DRAWING AND SPECIFICATIONS, HEREIN, ARE THE PROPERTY OF DIGITAL EQUIPMENT CORPORATION AND SHALL NOT BE REPRODUCED OR COPIED OR USED IN WHOLE OR IN PART AS THE BASIS FOR THE MANUFACTURE OR SALE OF ITEMS WITHOUT WRITTEN PERMISSION.

COPYRIGHT© 1980 DIGITAL EQUIPMENT CORPORATION

digital

USED ON OPTION/MODEL

DRN.	J. Casey	4-30-80
CHK'D	J. Casey	4-30-80
ENG.	[illegible]	4-30-80
PROD.	[illegible]	5-5-80

TITLE DOUBLE GRANT

SIZE	CODE	NUMBER	REV.
B	DD	G7273 - 0	*

SHEET 1 OF 1

TW

DRB 126

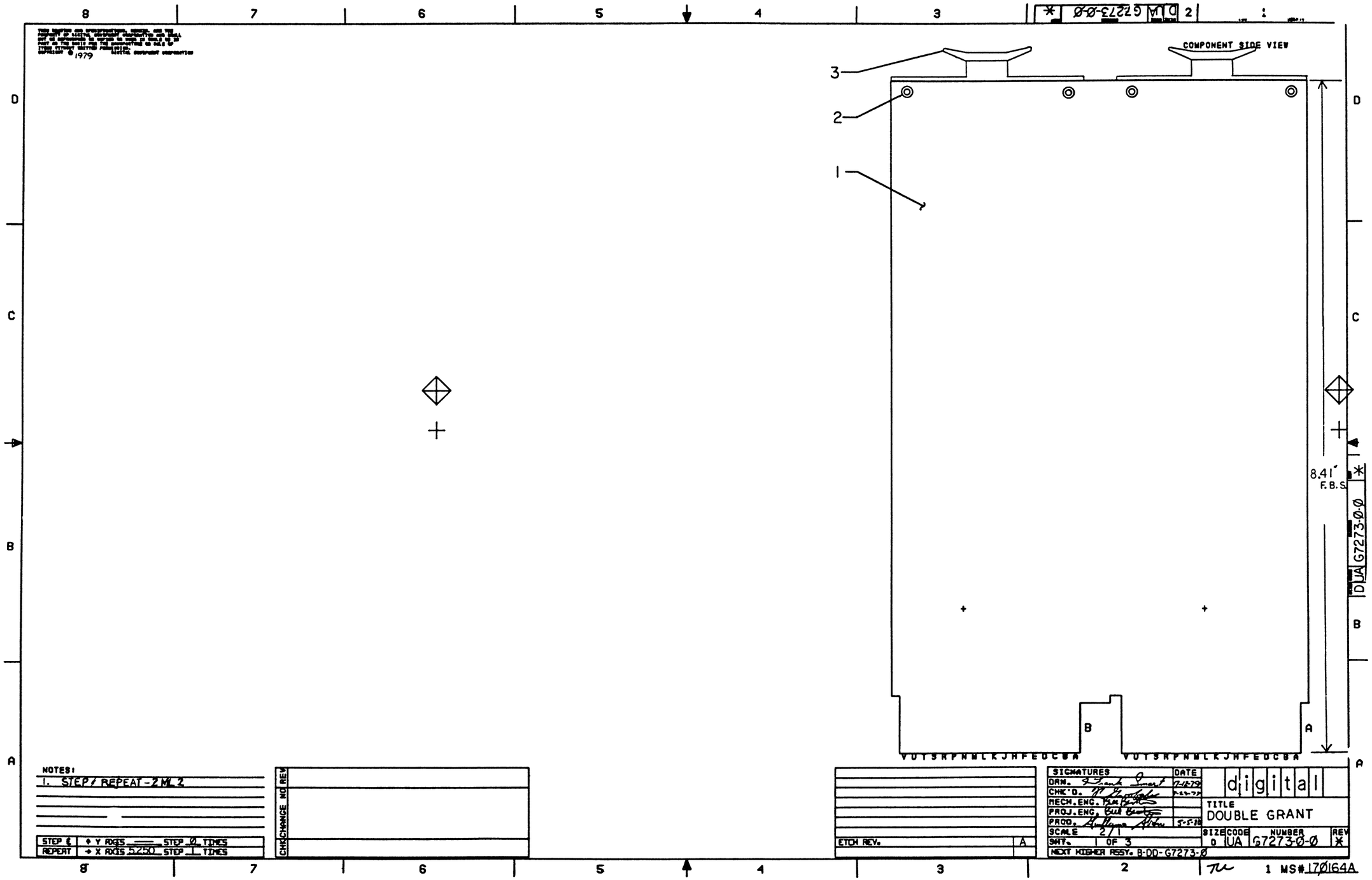

NOTES:
1. STEP / REPEAT - 2 ML 2

STEP ℄	↑ Y AXIS ___	STEP Ø TIMES
REPEAT	→ X AXIS 5250	STEP 1 TIMES

CHK	CHANGE NO	REV

ETCH REV. A

SIGNATURES	DATE
DRN. [signature]	7-12-79
CHK'D. [signature]	7-23-79
MECH. ENG. [signature]	
PROJ. ENG. [signature]	
PROD. [signature]	5-5-80
SCALE 2/1	
SHT. 1 OF 3	
NEXT HIGHER ASSY. B-DD-G7273-Ø	

digital

TITLE
DOUBLE GRANT

SIZE	CODE	NUMBER	REV
D	UA	G7273-Ø-Ø	*

1 MS# 17Ø164A

"THIS DRAWING AND SPECIFICATIONS, HEREIN, ARE THE PROPERTY OF DIGITAL EQUIPMENT CORPORATION AND SHALL NOT BE REPRODUCED OR COPIED OR USED IN WHOLE OR IN PART AS THE BASIS FOR THE MANUFACTURE OR SALE OF ITEMS WITHOUT WRITTEN PERMISSION.
COPYRIGHT © DIGITAL EQUIPMENT CORPORATION"

REVISIONS			
CHK	CHANGE #	ECO	

TITLE	SIZE	CODE	NUMBER	REV
DOUBLE GRANT	D	UA	G7273-0-0	*
SCALE 2-1 SHEET 2 OF 3	DIST			

DUA G7273-0-0 *

THIS DRAWING AND SPECIFICATIONS, HEREIN, ARE THE PROPERTY OF DIGITAL EQUIPMENT CORPORATION AND SHALL NOT BE REPRODUCED OR COPIED OR USED IN WHOLE OR IN PART AS THE BASIS FOR THE MANUFACTURE OR SALE OF ITEMS WITHOUT WRITTEN PERMISSION.
COPYRIGHT © DIGITAL EQUIPMENT CORPORATION

L4 L4

501387-1A
67273
SIDE 2

501387-1A
67273
SIDE 2

DOUBLE GRANT

DOUBLE GRANT

UAG7273-0-0 *

REVISIONS		
CHK	CHANGE NO.	REV

TITLE	SIZE	CODE	NUMBER	
DOUBLE GRANT	D	UA	G7273 - 0 - 0	*
SCALE 2 - 1 SHEET 3 OF 3	DIST			

AUTOMATED BY PRTLST.3L(32)

P A R T S L I S T

SHEET A1 OF A1

LINE	ITEM	DOCUMENT NUMBER	PART NUMBER	DESCRIPTION	QUANTITY PER VARIATION ØØ
1	1	D-MD-5013871-0-0	5013871-00	(11/24) BOARD FOR G7273	1
2	2		9006732-00	FYFLET, ROLLED FLANGE, .121 OD X	4
3	3		9008337-01	HANDLE, FLIP CHIP, GREEN	2

REVISION HISTORY			BASIC PART NO: G7273											
ENG	ECO NUMBER	REV	SECTION A OF A	DRN: F.SMART	DATE: 18-JUL-79		D	I	G	I	T	A	L
---	INITIAL	*	SECTION, VARIATION INDEX	CHK'D: F.GAROFALO	DATE: 18-JUL-79	TITLE	PARTS LIST						
			[A] ØØ			DOUBLE GRANT							
			[B]	DES.ENG.: R.GRUDA	DATE: 5-MAY-80								
			[C]			DOCUMENT NUMBER							
			[D]	RESP.ENG.: P.GRUDA	DATE: 5-MAY-80	SIZE	CODE	NUMBER				REV	
			[E]	MFG.ENG.: G.ABREU	DATE: 5-MAY-80	K	PL	G7273-Ø-DBP				*	
			[F]	ASSEMBLY NUMBER: D-UA-G7273-0-0	TOP DOCUMENT NUMBER: B-DD-G7273-0-0			FILE NAME: Z1264.PLS				EDIT #: 4	

"THIS DRAWING AND SPECIFICATIONS HEREIN, ARE THE PROPERTY OF DIGITAL EQUIPMENT CORPORATION AND SHALL NOT BE REPRODUCED OR COPIED OR USED IN WHOLE OR IN PART AS THE BASIS FOR THE MANUFACTURE OR SALE OF ITEMS WITHOUT WRITTEN PERMISSION. COPYRIGHT (C) 1980, DIGITAL EQUIPMENT CORPORATION "

TW

THIS DRAWING AND SPECIFICATIONS HEREIN ARE THE PROPERTY OF DIGITAL EQUIPMENT CORPORATION AND SHALL NOT BE REPRODUCED OR COPIED OR USED IN WHOLE OR IN PART AS THE BASIS FOR THE MANUFACTURE OR SALE OF ITEMS WITHOUT WRITTEN PERMISSION
COPYRIGHT ©1974 DIGITAL EQUIPMENT CORPORATION

D CS M9302-YA-1 *

NOTES:
1.) THE FOLLOWING REFERENCE DESIGNATIONS ARE NOT USED: C8, R64, AND R11Ø.

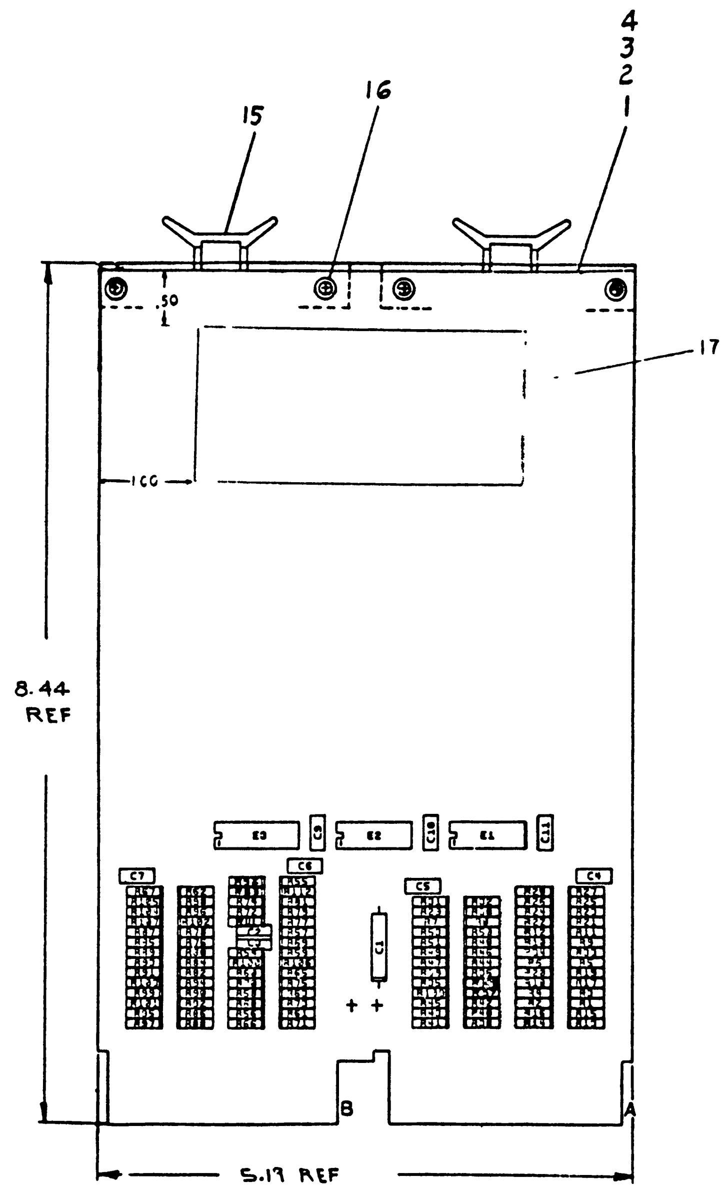

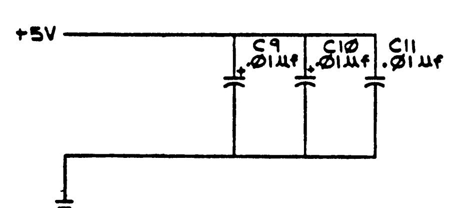

QTY	REF DESIGNATION	DESCRIPTION	PART NO	ITEM NO
REF		X-Y HOLE COORDINATE HOLE LOCATION	K CO M9302 0 4	1
REF		ASSY DRILLING HOLE LAYOUT	D AH M9302 0 5	2
				3
1		ETCHED CIRCUIT BOARD	5011311	4
3	C9 C10 C11	CAP .01 uf 100V 20% DISC	1001610 01	5
1	C1	CAP 39 µf 10V 10%	1000076	6
~~1~~	~~C8~~	~~CAP 6.8 µf 35V 10%~~	~~1005308~~	7
4	C4 THRU C7	CAP 22 µf 50V X%	1010274 01	8
2	C2 C3	CAP .001 µf 250V 20% DISC	1000043	9
56	R2 R4 R6 R8 R10 R12 R14 R16 R18 R20 R22 R24 R26 R28 R30 R32 R34 R36 R38 R40 R42 R44 R46 R48 R50 R54 R56 R58 R60 R62 R66 R69 R70 R72 R74 R76 R78 R80 R82 R84 R86 R88 R90 R92 R94 R96 R98 R100 R102 R57 R68, R37, R52, R93, R108, R111	RES 220 OHM 1/4W 5%	1300271	10
54	R1 R3 R5 R7 R9 R11 R13 R15 R17 R19 R21 R23 R25 R27 R29 R31 R33 R35 R39 R41 R43 R45 R47 R49 R51 R53 R55 R59 R61 R63 R65 R67 R71 R73 R75 R77 R79 R81 R85 R87 R89 R91 R93 R95 R97 R99 R101 R103 THRU R107 R109 R112	RES 15 OHM 1/4W 5%	1300250	11
1	E2	I C DEC 7430	1905578	12
1	E1	I C DEC 8881	1909705	13
1	E3	I C DEC 8837	1911116	14
2		HANDLE, FLIP-CHIP (MAGENTA)	9008337 6	15
4		EYELETS	9006732	16
1		DECAL	B 3C-74 679 -C-C	17

PARTS LIST

IC TYPE	GND	+5V
IC DEC 8837	8	16

GND AND 5V ARE USUALLY PIN 7 AND 14 RESPECTIVELY EXCEPTIONS ARE STATED ABOVE

IC PIN LOCATIONS

FIRST USED ON OPTION MODEL

ETCH BOARD REV B

REV | CHANGE NO | CHK | REVISIONS

DEC NO	EIA NO	DEC NO	EIA NO

SEMICONDUCTOR CONVERSION CHART

E Tobey -15/76
E Tobey 9/7/76
E Tobey 6/28/76
E Tobey 6/28/76
Wentlia 6 Dec 76

NEXT HIGHER ASSY

SCALE
SHEET 1 OF 2

digital EQUIPMENT CORPORATION MAYNARD, MASSACHUSETTS

TITLE
UNIBUS TERMINATOR

SIZE D CODE CS NUMBER M9302-YA-1 REV. *

DIST

D CS M9302-YA-1 *

THIS DRAWING AND SPECIFICATIONS, HEREIN, ARE THE PROPERTY OF DIGITAL EQUIPMENT CORPORATION AND SHALL NOT BE REPRODUCED OR COPIED OR USED IN WHOLE OR IN PART AS THE BASIS FOR THE MANUFACTURE OR SALE OF ITEMS WITHOUT WRITTEN PERMISSION
COPYRIGHT ©1975 DIGITAL EQUIPMENT CORPORATION

+5V — AA2, BA2

C4 THRU C7 .22µF

C1 39µF 10V 10%

GND — AB2, AC2, AN1, AP1, AR1, AS1, AT1, AV2, BB2, BC2, BD1, BE1, BT1, BV2

R1 150	R3 150	R5 150	R7 150	R9 150	R11 150	R13 150	R15 150	R17 150	R19 150	R21 150	R23 150	R25 150	R27 150	R29 150	R31 150	R33 150	R35 150	R10Ø 150	R39 150	R41 150	R43 150	R45 150	R47 150	R49 150	R51 150	R53 150	R55 150
R2 220	R4 220	R6 220	R8 220	R1Ø 220	R12 220	R14 220	R16 220	R18 220	R2Ø 220	R22 220	R24 220	R26 220	R28 220	R3Ø 220	R32 220	R34 220	R1Ø8 220	R37 220	R36 220	R38 220	R4Ø 220	R42 220	R44 220	R46 220	R48 220	R5Ø 220	R52 220
BUS DØ5 L	BUS DØ7 L	BUS DØ9 L	BUS DI1 L	BUS DØ3 L	BUS DØ1 L	BUS DØ4 L	BUS DØ6 L	BUS DØ8 L	BUS DI0 L	BUS DØ2 L	BUS DØØ L	BUS INTR L	BUS INIT L	BUS PA L	BUS DI4 L	BUS DI2 L	BUS NPG H	BUS BG7 H	BUS SACK L	BUS NPR L	BUS BR7 L	BUS BRG L	BUS BBSY L	BUS PB L	BUS DI5 L	BUS DI3 L	BUS BGG H
AF2	AH2	AJ2	AK2	AE2	AD2	AE1	AF1	AH1	AJ1	AD1	AC1	AB1	AA1	AM1	AL1	AK1	AU1	AV1	AR2	AS2	AT2	AU2	AP2	AN2	AM2	AL2	BA1

R57 220	R59 150	R61 150	R63 150	R65 150	R67 150	R69 220	R71 150	R73 150	R75 150	R77 150	R79 150	R81 150	R112 150	R85 150	R87 150	R89 150	R91 150	R93 150	R95 150	R97 150	R99 150	R101 150	R103 150	R104 150	R105 150	R106 150	R107 150
C2 .001 µF	R54 220	R56 220	R58 220	R60 220	R62 220	C3 .001 µF	R66 220	R68 220	R70 220	R111 220	R72 220	R74 220	R83 220	R76 220	R78 220	R80 220	R82 220	R84 220	R86 220	R88 220	R90 220	R92 220	R94 220	R96 220	R98 220	R100 220	R102 220
BUS AC LO L	BUS AØ1 L	BUS AØ3 L	BUS AØ5 L	BUS AØ7 L	BUS AØ9 L	BUS DC LOL	BUS AØØ L	BUS AØ2 L	BUS AØ4 L	BUS BG4 H	BUS BR4 L	BUS BR5 L	BUS BG5 H	BUS AI2 L	BUS AI3 L	BUS AI5 L	BUS AI7 L	BUS AI4 L	BUS AI6 L	BUS CI L	BUS CØ L	BUS SSYN L	BUS MSYN L	BUS AIØ L	BUS AØ8 L	BUS AØ6 L	BUS AI1 L
BF1	BH1	BJ1	BK1	BL1	BM1	BF2	BH2	BJ2	BK2	BE2	BD2	BC1	BB1	BP2	BP1	BR1	BS1	BR2	BS2	BT2	BU2	BU1	BV1	BN2	BM2	BL2	BN1

SPARES

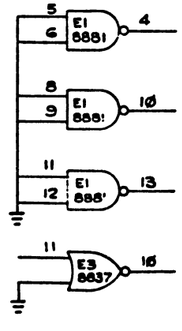

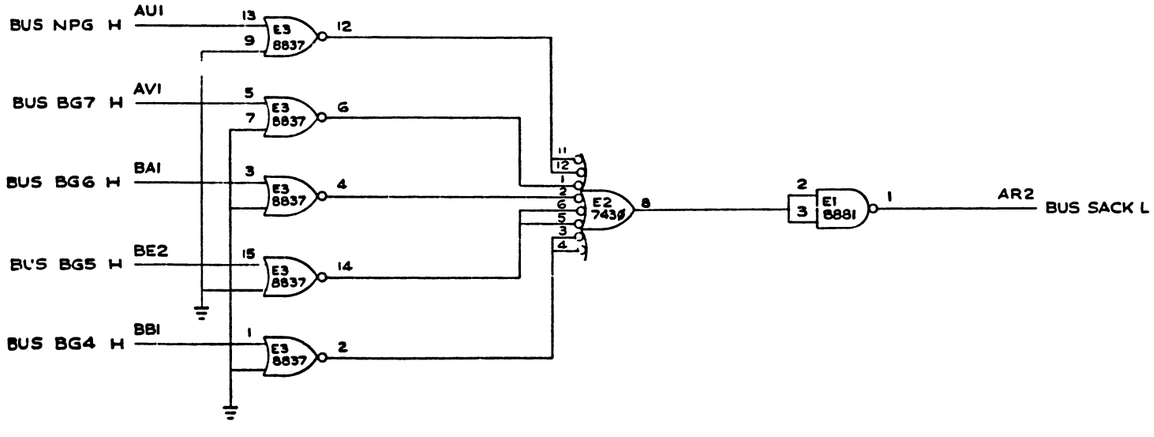

REVISIONS

CHK	CHANGE NO	REV

TITLE: UNIBUS TERMINATOR

SIZE D | CODE CS | NUMBER M9302-YA-1 | REV *

SCALE — | SHEET 2 OF 2 | DIST

DCS M9302-YA-1

"THE MATERIAL HEREIN IS FOR INFORMATION PURPOSES ONLY AND IS SUBJECT TO CHANGE WITHOUT NOTICE. DIGITAL EQUIPMENT CORPORATION ASSUMES NO RESPONSIBILITY FOR ANY ERRORS WHICH MAY APPEAR HEREIN."

FIELD MAINTENANCE PRINT SET

"THIS DRAWING AND SPECIFICATIONS, HEREIN, ARE THE PROPERTY OF DIGITAL EQUIPMENT CORPORATION AND SHALL NOT BE REPRODUCED OR COPIED OR USED IN WHOLE OR IN PART AS THE BASIS FOR THE MANUFACTURE OR SALE OF ITEMS WITHOUT WRITTEN PERMISSION. COPYRIGHT © 1982 DIGITAL EQUIPMENT CORPORATION."

TABLE OF CONTENTS

B-TC-MS730-C-1	FIELD MAINT. PRINT SET MP01366
B-DD-MS730-C	1 MB 64K ECC MEMORY ARRAY - DRAWING DIRECTORY
B-PL-MS730-C-0	1 MB 64K ECC MEMORY ARRAY - PARTS LIST
B-DD-M8750-0	MOS MEMORY ARRAY - DRAWING DIRECTORY
D-UA-M8750-0-0	MOS MEMORY ARRAY ASSY
K-PL-M8750-CA-DBP	MOS MEMORY ARRAY - PARTS LIST
D-CS-M8750-0-1	MOS MEMORY ARRAY - CIRCUIT SCHEMATIC

UNIT VARIATIONS COVERED BY THIS PRINT SET
MS730-CA
MS730-CB
MS730-CC
MS730-CD
MS730-CF

MS730-C

Field Maintenance Print Set

Digital Equipment Corporation

PRINT SET ORDER
NO. MP01366

REV. A | NUMBER MS730-C-1 | CODE TC | SIZE B

REVISIONS	REV	CHG. NO.	DATE

USED ON OPTION/MODEL	
11730	

SHEET 1 OF 1

DRN.	A. ROCHA	DATE	13APR82
CHK'D		DATE	20APR82
PROJ. ENG.	DM. Landry	DATE	20APR82
FIELD SERV.	W Hunter	DATE	21 APR82

digital

TITLE:
1 MB 64K ECC MEMORY ARRAY
FIELD MAINT. PRINT SET

SIZE	CODE	NUMBER	REV.
B	TC	MS730-C-1	A

DIST.

DRB 124

TW

"THE MATERIAL HEREIN IS FOR INFORMATION PURPOSES ONLY AND IS SUBJECT TO CHANGE WITHOUT NOTICE. DIGITAL EQUIPMENT CORPORATION ASSUMES NO RESPONSIBILITY FOR ANY ERRORS WHICH MAY APPEAR HEREIN."

DRAWING DIRECTORY

"THIS DRAWING AND SPECIFICATIONS, HEREIN, ARE THE PROPERTY OF DIGITAL EQUIPMENT CORPORATION AND SHALL NOT BE REPRODUCED OR COPIED OR USED IN WHOLE OR IN PART AS THE BASIS FOR THE MANUFACTURE OR SALE OF ITEMS WITHOUT WRITTEN PERMISSION. COPYRIGHT © 1982 DIGITAL EQUIPMENT CORPORATION

UNIT VARIATIONS

VAR	TITLE
MS730-CA	1 MB 64K ECC MEMORY ARRAY - QTY 1
MS730-CB	1 MB 64K ECC MEMORY ARRAY - QTY 2
MS730-CC	1 MB 64K ECC MEMORY ARRAY - QTY 3
MS730-CD	1 MB 64K ECC MEMORY ARRAY - QTY 4
MS730-CF	1 MB 64K ECC MEMORY ARRAY - QTY 10

REVISIONS

REV.	CHANGE NO.	CHK

USED ON OPTION/MODEL: 11730

SHEET 1 OF 3

DRN.	A. ROCHA	DATE	13APR82
CHK'D.	R.P. Molin	DATE	20APR82
PROJ. ENG.	D.M. Landry	DATE	20APR82
PROD.	S.A. Castagna	DATE	21APR82

TITLE: 1 MB 64K ECC MEMORY ARRAY

digital

SIZE	CODE	NUMBER	REV
B	DD	MS730-C	A

DIST.

DRB 106A

TW

"THIS DRAWING AND SPECIFICATIONS, HEREIN, ARE THE PROPERTY OF DIGITAL EQUIPMENT CORPORATION AND SHALL NOT BE REPRODUCED OR COPIED OR USED IN WHOLE OR IN PART AS THE BASIS FOR THE MANUFACTURE OR SALE OF ITEMS WITHOUT WRITTEN PERMISSION.
COPYRIGHT © 1982 DIGITAL EQUIPMENT CORPORATION"

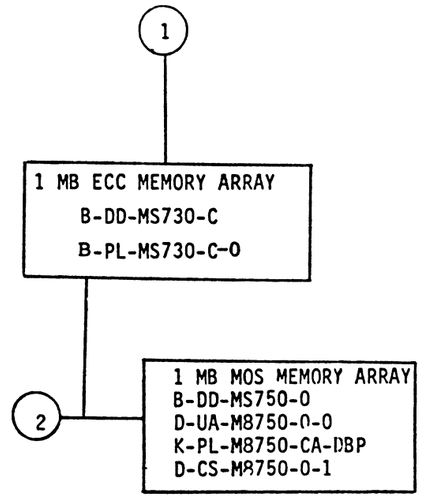

FIND NO.	DRAWING NO.	DESCRIPTION	TYPE
1	MP01366	FIELD MAINTENANCE PRINT SET (MP)	-
	B-TC-MS730-C-1	FIELD MAINTENANCE PRINT SET (TC)	-
	B-DD-MS730-C	1 MB 64K ECC MEMORY ARRAY - DRAWING DIRECTORY	-
	B-PL-MS730-C-0	1 MB 64K ECC MEMORY ARRAY - PARTS LIST	-
2	B-DD-M8750-0	1 MB MOS MEMORY ARRAY - DRAWING DIRECTORY	-
	D-UA-M8750-0-0	1 MB MOS MEMORY ARRAY ARRAY	E/M
	K-PL- M8750-CA-DBP	1 MB MOS MEMORY ARRAY - PARTS LIST	-
	D-CS-M8750-0-1	1 MB MOS MEMORY ARRAY - CIRCUIT SCHEMATIC	E

FIND NO.	DRAWING NO.	DESCRIPTION	TYPE

TYPE: E ELECTRICAL
M MECHANICAL
E/M ELECTRO/MECHANICAL

digital

TITLE 1 MB 64K ECC MEMORY ARRAY

SHEET 3 OF 3 | SIZE B | CODE DD | NUMBER MS730-C | REV A

DRB 108A

TW

DIGITAL EQUIPMENT CORPORATION
PARTS LIST

MADE BY / DATE A.ROCHA 13APR82	CHECKED [signature] / DATE 20 APR 82	SECTION
ENG [signature] / DATE 20 APR 82	PROD / DATE S.A. Castylone 21 APR 82	ISSUED SECTION

NOTES:

ITEM NO.	DRAWING NO.	PART NO.	DESCRIPTION	QUANTITY / VARIATION MS730-CA	MS730-CB	MS730-CC	MS730-CD	MS730-CF								REF DESIGNATION
1	B-DD-M8750-0	M8750-CA	1 MB ARRAY MOS MEMORY	1	2	3	4	10								

E.C.O. NO.

"THIS DRAWING AND SPECIFICATIONS, HEREIN, ARE THE PROPERTY OF DIGITAL EQUIPMENT CORPORATION AND SHALL NOT BE REPRODUCED OR COPIED OR USED IN WHOLE OR IN PART AS THE BASIS FOR THE MANUFACTURE OR SALE OF ITEMS WITHOUT WRITTEN PERMISSION. COPYRIGHT © DIGITAL EQUIPMENT CORPORATION"

TITLE	ASSY NO.	SIZE	CODE	NUMBER	REV.
1 MB 64K ECC MEMORY ARRAY	B-DD-MS730-C	B	PL	MS730-C-0	A
	SHEET 1 OF 1	INSERTION PARTS LIST DATA BASE REV			

DRB 125

TW

SIZE	CODE	NUMBER	REV.
B	DD	M875Ø-Ø	D

DRAWING NO.	NO. OF SHTS.	PART NO.	DESCRIPTION	REVISIONS
	-	M8750-00	MOS MEMORY ARRAY	A A A A
D-UA-M875Ø-Ø-Ø	4		MOS MEMORY ARRAY	A B B C
D-CS-M875Ø-Ø-1	15		MOS MEMORY ARRAY	A A A A
K-PL-M875Ø-BA-DBP	3		PARTS LIST DATA BASE	A B B C
K-PC-M875Ø-0-DBC	-		P. C. DESIGN DATA BASE	A A A A
		5Ø137Ø6	ETCH BOARD	C C C C
K-PL-M875Ø-CA-DBP	-		PARTS LIST DATA BASE	A A A A
K-CS-M875Ø-Ø-DBS	-		CIRCUIT SCHEMATIC DATA BASE	A A A A
A-SP-M875Ø-Ø-2	14		M3750 MOS STORAGE ARRAY	- - A A

NOTES: 1. Uses Etch of D-MD-5Ø137Ø6-Ø-Ø (M8728)

REVISIONS					
REV.	A	B	C	D	
CHG NO.	INITIAL	MLØØ1	MLØØ2	MLØØ3	
DATE	1/81	2/82	6/82	7/82	

"THIS DRAWING AND SPECIFICATIONS, HEREIN, ARE THE PROPERTY OF DIGITAL EQUIPMENT CORPORATION AND SHALL NOT BE REPRODUCED OR COPIED OR USED IN WHOLE OR IN PART AS THE BASIS FOR THE MANUFACTURE OR SALE OF ITEMS WITHOUT WRITTEN PERMISSION.

COPYRIGHT© 1981 DIGITAL EQUIPMENT CORPORATION

digital

USED ON OPTION/MODEL

DRN. V. MANGAUDIS	21JAN81	TITLE MOS MEMORY ARRAY
CHK'D D. Bozeman	1ØMAR81	
ENG. K. Marnoyek	24 JUN 81	SIZE B / CODE DD / NUMBER M875Ø-Ø / REV. D
PROD.	24JUN81	SHEET 1 OF 1

DRB 126

ML2

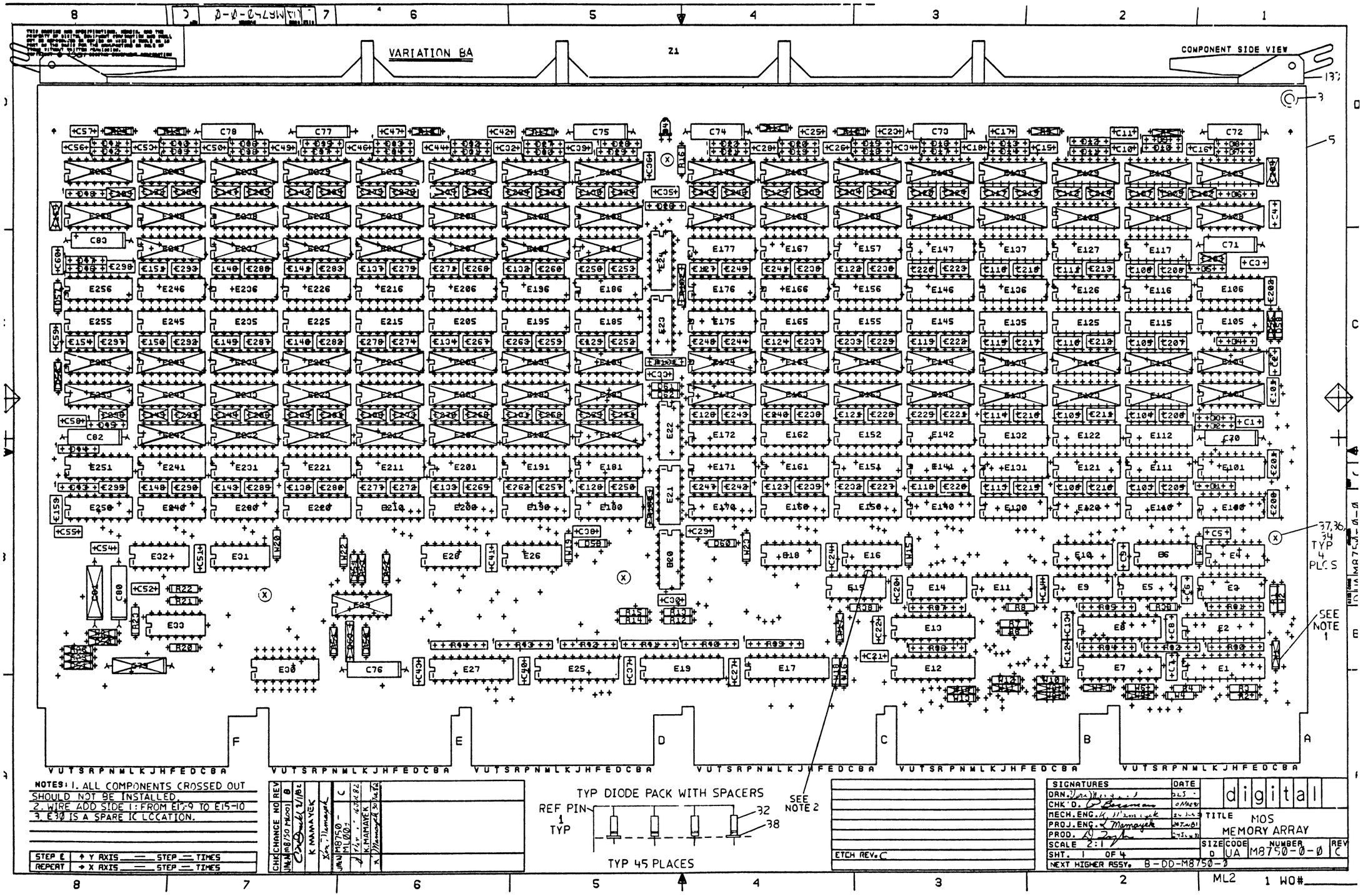
VARIATION BA
Z1
COMPONENT SIDE VIEW
37,36,34 TYP 4 PLCS
SEE NOTE 1
SEE NOTE 2
TYP DIODE PACK WITH SPACERS
REF PIN 1 TYP
TYP 45 PLACES
NOTES: 1. ALL COMPONENTS CROSSED OUT SHOULD NOT BE INSTALLED.
2. WIRE ADD SIDE 1: FROM E15-9 TO E15-10
3. E30 IS A SPARE IC LOCATION.
STEP E ↑ Y AXIS — STEP — TIMES
REPEAT → X AXIS — STEP — TIMES
CHK CHANGE NO REV
JMN M8750 ML001 B
K MAMAYEK
JMN M8750 - ML001 C
K.MAMAYEK
ETCH REV. C
SIGNATURES DATE
DRN.
CHK'D.
MECH.ENG.
PROJ.ENG. K Mamayek
PROD.
SCALE 2:1
SHT. 1 OF 4
NEXT HIGHER ASSY. B-DD-M8750-0
digital
TITLE MOS MEMORY ARRAY
SIZE D CODE UA NUMBER M8750-0-0 REV C
ML2 1 WO#

THIS DRAWING AND SPECIFICATIONS, HEREIN, ARE THE PROPERTY OF DIGITAL EQUIPMENT CORPORATION AND SHALL NOT BE REPRODUCED OR COPIED OR USED IN WHOLE OR IN PART AS THE BASIS FOR THE MANUFACTURE OR SALE OF ITEMS WITHOUT WRITTEN PERMISSION
COPYRIGHT © 1987 DIGITAL EQUIPMENT CORPORATION

VARIATION BA

Z1

SEE NOTE

NOTES:
1. ALL COMPONENTS CROSSED OUT SHOULD NOT BE INSTALLED.
2. WIRE-ADD SIDE 1:
   FROM E15-9 TO E15-10
3. E30 IS A SPARE LOCATION.

CHK	CHANGE NO	REV

STEP E	↑ Y AXIS ___ STEP ___ TIMES		
REPEAT	→ X AXIS ___ STEP ___ TIMES		

SIGNATURES	DATE
DRN. J Mangandu	19 JAN 87
CHK'D.	
MECH. ENG.	
PROJ. ENG.	
PROD.	

digital

TITLE MOS MEMORY ARRAY

SCALE	SIZE	CODE	NUMBER	REV
2:1	D	UA	M8750-0-0	C

SHT. 2 OF 4

NEXT HIGHER ASSY. B-DD-M8750-0

ML2 1 WO#

VARIATION CA

Z1

COMPONENT SIDE VIEW

13

36

5

37,39,40 TYP 4 PLC'S

SEE NOTE 1

SEE NOTE 2

NOTES: 1. ALL COMPONENTS CROSSED OUT SHOULD NOT BE INSTALLED.
2. WIRE ADD SIDE 1: FROM E15-9 TO E15-10
3 E30 IS A SPARE IC LOCATION.

CHK	CHANGE NO	REV

STEP & REPEAT	↑ Y AXIS ___ STEP ___ TIMES
	→ X AXIS ___ STEP ___ TIMES

TYP DIODE PACK WITH SPACERS

REF PIN 1 TYP

35

41

TYP 45 PLACES

ETCH REV.

SIGNATURES	DATE
DRN.	22 JAN
CHK'D.	
MECH. ENG.	
PROJ. ENG.	
PROD.	

digital

TITLE MOS MEMORY ARRAY

SCALE 2:1

SHT. 3 OF 4

SIZE D | CODE UA | NUMBER M8750-0-0 | REV C

NEXT HIGHER ASSY. B-DD-M8750-0

ML2 1 WO#

UA M8750-0-0 C

THESE DRAWING AND SPECIFICATIONS, HEREIN, ARE THE PROPERTY OF DIGITAL EQUIPMENT CORPORATION AND SHALL NOT BE REPRODUCED OR COPIED OR USED IN WHOLE OR IN PART AS THE BASIS FOR THE MANUFACTURE OR SALE OF ITEMS WITHOUT WRITTEN PERMISSION.
COPYRIGHT © 1973 DIGITAL EQUIPMENT CORPORATION

VARIATION CA

NOTES:
1. ALL COMPONANTS CROSSED OUT SHOULD NOT BE INSTALLED.
2. WIRE ADD SIDE 1: FROM E15-9 TO E15-10
3. E30 IS A SPARE IC LOCATION.

STEP E	+ Y AXIS ___ STEP ___ TIMES
REPEAT	+ X AXIS ___ STEP ___ TIMES

REV	CHANGE NO	CHK

TYP DIODE PACK WITH SPACERS

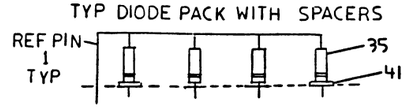

TYP 45 PLACES

SIGNATURES	DATE
DRN.	
CHK'D.	
MECH.ENG.	
PROJ.ENG.	
PROD.	
SCALE 2/1	
SHT. 4 OF 4	
NEXT HIGHER ASSY. B-DD-M8750-0	

digital

TITLE MOS MEMORY ARRAY

SIZE	CODE	NUMBER	REV
D	UA	M8750-0-0	C

DUAM8750-0-0 REV C

ML2 1 WN#

AUTOMATED BY PRTLST.3P(44) — P A R T S L I S T — SHEET A1 OF A2

LINE	ITEM	DOCUMENT NUMBER	PART NUMBER	DESCRIPTION	QTY PER VARIATION CB	CD	CH	REFERENCE DESIGNATOR
1	1	D-UA-M8750-0-0		UNIT ASSEMBLY	REF	REF	REF	
2	2	D-CS-M8750-0-1		CIRCUIT SCHEMATIC	REF	REF	REF	
3	3	D-MD-5013706-0-0		DRILL & ETCH DRAWING	REF	REF	REF	
4	4	B-DD-M8750-0		DRAWING DIRECTORY	REF	REF	REF	
5	5		5013706-00	DRILL+ETCH MEMORY	1	1	1	
6	6	SPARE IC		SPARE IC	1	1	1	E30
7	7		1001610-00	.01 MFD 50V +80-20% Z5U CER	47	47	47	C1-C10,C12-C16,C18,C20-C24,
							CONT	C27-C30,C32-C41,C43,C44,C46,C49,
							CONT	C51,C53-C56,C58-C60
8	8		1010274-00	.22 MFD 50V +80-20% Z5U CER	164	164	164	C101-C155,C11,C17,C25,C26,C42,
							CONT	C52,C47,C200-C299,C50,C57
9	9		1012084-01	8 MFD 25V +75-10% AL EL	12	12	12	C70-C78,C80,C82,C83
10	10		1105275-00	D 672 TR= 15NS PIV= 60V SI	8	8	8	D55-D62
11	11		1109991-00	*** THIS ITEM IS NOT USED ***	-	-	-	
12	12		1114384-00	LED 105MW 35MA GREEN	1	1	1	D49
13	13		1216988-02	HANDLE,MODULE,HEX TWO EJECTORS	1	1	1	
14	14		1300309-00	390.0 .25 W 5.0 % CC	1	1	1	R20
15	15		1300365-00	1.0 K .25 W 5.0 % CC	1	1	1	R22
16	16		1301317-00	10.0 .25 W 5.0 % CC	2	2	2	R21,R23
17	17		1301972-00	270.0 .25 W 5.0 % CC	1	1	1	R16
18	18		1302124-00	18.0 .25 W 5.0 % CC	2	2	2	R33,R38
19	19		1302177-00	47.0 K .25 W 5.0 % CC	11	11	11	R1-R4,R6-R8,R12-R15
20	20		1315678-00	R NETWORK 3-18 5.0 % 7PIN	13	13	13	R30-R32,R34-R37,R39-R44
21	21		1513265-00	3725 QUAD CORE DRIVER	1	1	1	E33
22	22		1910091-00	DEC 7437 AND GATE-QUAD 2IN.6U	2	2	2	E15,E20
23	23		1910532-00	74S00 NAND GATE-QUAD 2IN	1	1	1	E22
24	24		1910534-00	74S04 INVERTER GATE-HEX 11	1	1	1	E11
25	25		1911676-00	745139 DECODER-DUAL TWO-INP	1	1	1	E3
26	26		1912068-00	74128 DRIVER,LINE,QUAD,50	1	1	1	E14
27	27		1912388-00	74S02 NOR GATE-QUAD 2IN,PO	2	2	2	E5,E9

REVISION HISTORY		
ENG	ECO NUMBER	REV
---	INITIAL	A

BASIC PART NO: M8750

SECTION A OF A

SECTION.VARIATION INDEX
[A] CB,CD,CH
[B]
[C]
[D]
[E]
[F]
[H]
[J]
[K]
[L]
[M]
[N]

DRN: K. CROUSE	DATE: 13-JAN-81	
CHK'D: P.BOSSMAN	DATE: 4-FEB-31	
DES.ENG: K. MAMAYEK	DATE: 13-JAN-81	
RESP.ENG.: K. MAMAYEK	DATE: 13-JAN-81	
MFG.ENG.: D. TAYLOR	DATE: 13-JAN-81	
ASSEMBLY NUMBER: D-UA-M8750-0-0	TOP DOCUMENT NUMBER: #B-DD-M8750-0	FILE NAME: Z2111A.PLS

D I G I T A L

TITLE PARTS LIST

MOS MEMORY ARRAY

DOCUMENT NUMBER

SIZE	CODE	NUMBER	REV
K	PL	M8750-CA-DBP	A

EDIT # 15

"THIS DRAWING AND SPECIFICATIONS HEREIN, ARE THE PROPERTY OF DIGITAL EQUIPMENT CORPORATION AND SHALL NOT BE REPRODUCED OR COPIED OR USED IN WHOLE OR IN PART AS THE BASIS FOR THE MANUFACTURE OR SALE OF ITEMS WITHOUT WRITTEN PERMISSION.
COPYRIGHT (C) 1981. DIGITAL EQUIPMENT CORPORATION "

AUTOMATED BY PRTLST.3P(44) — P A R T S L I S T —

LINE	ITEM	DOCUMENT NUMBER	PART NUMBER	DESCRIPTION	QTY PER VARIATION CB	CD	CH	REFERENCE DESIGNATOR
28	28		1912389-00	74S08 AND GATE-QUAD 2IN,PO	1	1	1	E4
29	29		1912746-00	DEC 74S37 NAND GATE-QUAD 2IN	11	11	11	E6,E10,E16,E18,E21,E23,E24,E26,
							CONT	E28,E31,E32
30	30		1913777-00	LS240 DRIVER,LINE,OCTAL,T	10	10	10	E1,E2,E7,E8,E12,E13,E17,E19,E25,
							CONT	E27
31	31		2113825-01	*** THIS ITEM IS NOT USED ***	-	-	-	
32	32		2118467-01	8264-20 RAM 64K X1,200NS 1	-	156	-	E100,E101,E103-E106,E108-E251,
							CONT	E253-E256,E258,E259
33	33		2118472-01	4164-2 MOS RAM 64K X1,200	-	-	156	E100,E101,E103-E106,E108-E251,
							CONT	E253-E256,E258,E259
34	34		2118470-01	4864-1 MOS RAM 64K X1,200	156	-	-	E100,E101,E103-E106,E108-E251,
							CONT	E253-E256,E258,E259
35	35		7010918-01	DIODE STICK G652	45	45	45	D1-D22,D26-D48
36	36		9000024-01	EYELET,ROLL FLANGE .1210DX .192	12	12	12	
37	37		9006968-00	SPACER, FIBER, RND, 4-40, .250 X	4	4	4	
38	38		9009185-00	JUMPER, WIRE, INSULATED, BLACK B	15	15	15	W2-W4,W6,W8,W10,W12,W13,W15,W16,
							CONT	W18-W20,W22,W23
39	39		9009233-04	SCREW, NYLON, SLTD BINDER HD, 4-	4	4	4	
40	40		9009321-00	LOCK TITE, SCREW LOCK, 1000 PER	4	4	4	
41	41		9107771-00	TUBING,STRD WALL,.040ID UL	90	90	90	

42 NOTE: M8750-CA IS THE PRIMARY VARIATION 256K X 39 BITS SYSTEM (NOT A MODULE TYPE).
43 NOTE: M8750-CB IS A MODULE TYPE USING HITACHI 64K MOS DEVICES.
44 NOTE: M8750-CD IS A MODULE TYPE USING FUJITSU 64K MOS DEVICES.
45 NOTE: M8750-CH IS A MODULE TYPE USING NEC 64K MOS DEVICES.

D	I	G	I	T	A	L	TITLE	SECTION A OF A	SIZE	CODE	DOCUMENT NUMBER	REV
							MOS MEMORY ARRAY		K	PL	M8750-CA-DBP	A

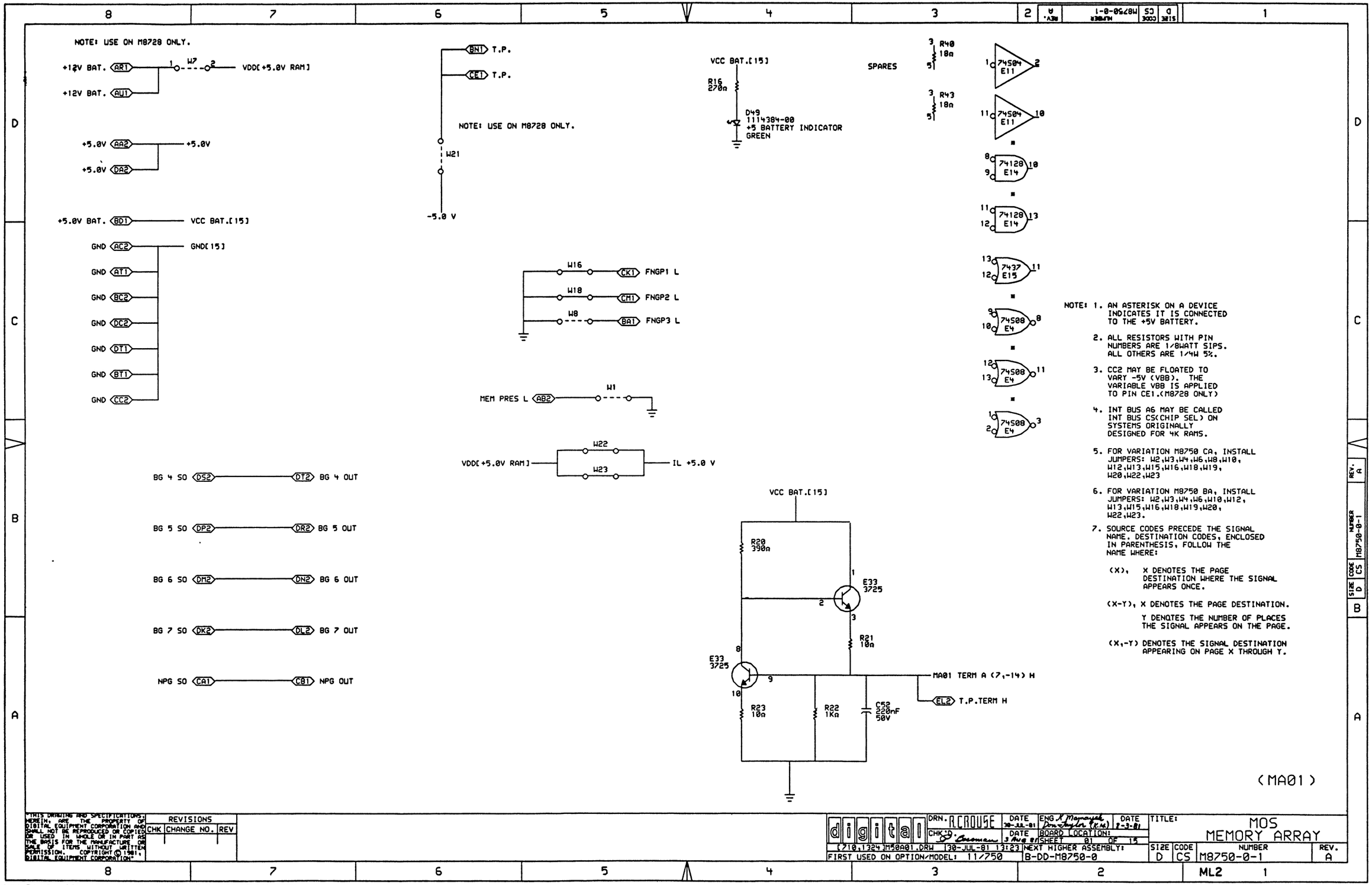

NOTE: 1. AN ASTERISK ON A DEVICE INDICATES IT IS CONNECTED TO THE +5V BATTERY.

2. ALL RESISTORS WITH PIN NUMBERS ARE 1/8WATT SIPS. ALL OTHERS ARE 1/4W 5%.

3. CC2 MAY BE FLOATED TO VARY -5V (VBB). THE VARIABLE VBB IS APPLIED TO PIN CE1.(M8728 ONLY)

4. INT BUS A6 MAY BE CALLED INT BUS CS(CHIP SEL) ON SYSTEMS ORIGINALLY DESIGNED FOR 4K RAMS.

5. FOR VARIATION M8750 CA, INSTALL JUMPERS: W2,W3,W4,W6,W8,W10, W12,W13,W15,W16,W18,W19, W20,W22,W23

6. FOR VARIATION M8750 BA, INSTALL JUMPERS: W2,W3,W4,W6,W10,W12, W13,W15,W16,W18,W19,W20, W22,W23.

7. SOURCE CODES PRECEDE THE SIGNAL NAME. DESTINATION CODES, ENCLOSED IN PARENTHESIS, FOLLOW THE NAME WHERE:

(X), X DENOTES THE PAGE DESTINATION WHERE THE SIGNAL APPEARS ONCE.

(X-Y), X DENOTES THE PAGE DESTINATION.

Y DENOTES THE NUMBER OF PLACES THE SIGNAL APPEARS ON THE PAGE.

(X,-Y) DENOTES THE SIGNAL DESTINATION APPEARING ON PAGE X THROUGH Y.

"THIS DRAWING AND SPECIFICATIONS, HEREIN, ARE THE PROPERTY OF DIGITAL EQUIPMENT CORPORATION AND SHALL NOT BE REPRODUCED OR COPIED OR USED IN WHOLE OR IN PART AS THE BASIS FOR THE MANUFACTURE OR SALE OF ITEMS WITHOUT WRITTEN PERMISSION. COPYRIGHT © 1981, DIGITAL EQUIPMENT CORPORATION"

REVISIONS		
CHK	CHANGE NO.	REV

digital

DRN. R.CROUSE DATE 30-JUL-81 ENG K Mamayek Don Taylor (K.M.) DATE 8-3-81
CHK'D D. Bossman DATE 3 Aug 81 BOARD LOCATION: SHEET 01 OF 15
[710,1324]M50A01.DRW 30-JUL-81 13:23 NEXT HIGHER ASSEMBLY: B-DD-M8750-0
FIRST USED ON OPTION/MODEL: 11/750

TITLE: MOS MEMORY ARRAY

SIZE	CODE	NUMBER	REV.
D	CS	M8750-0-1	A

ML2

MAMAYEK KEN, [710,1324]M50A01.DPL, SCALE 2, "D" RELEASE BOX

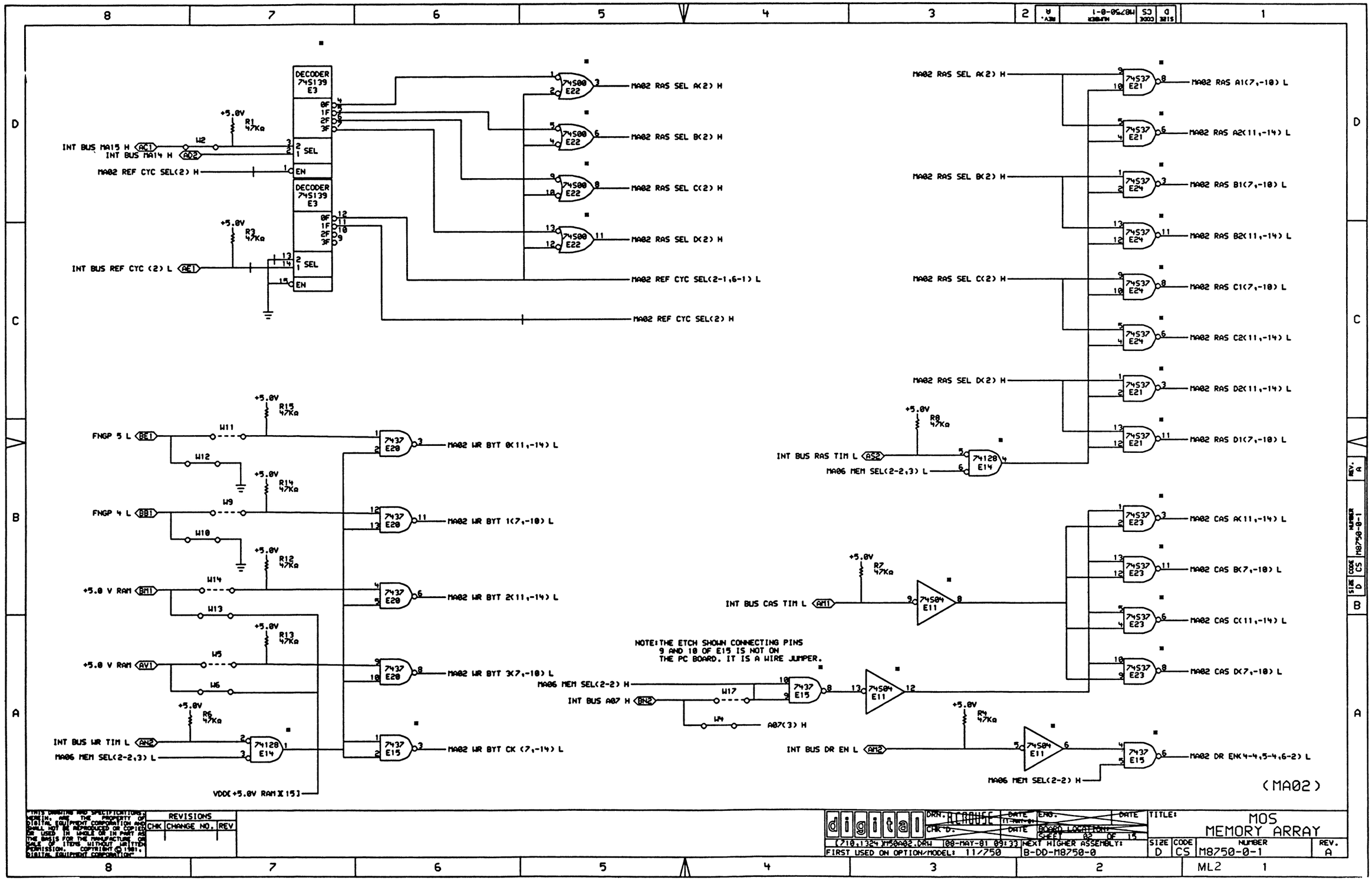

"THIS DRAWING AND SPECIFICATIONS, HEREIN, ARE THE PROPERTY OF DIGITAL EQUIPMENT CORPORATION AND SHALL NOT BE REPRODUCED OR COPIED OR USED IN WHOLE OR IN PART AS THE BASIS FOR THE MANUFACTURE OR SALE OF ITEMS WITHOUT WRITTEN PERMISSION. COPYRIGHT © 1981, DIGITAL EQUIPMENT CORPORATION"

REVISIONS		
CHK	CHANGE NO.	REV

digital

DRN. RCROUSE DATE 11-MAY-81 ENG. DATE
CHK D. DATE BOARD LOCATION: SHEET 02 OF 15
(710,1324)M50A02.DRW 08-MAY-81 09:33 NEXT HIGHER ASSEMBLY:
FIRST USED ON OPTION/MODEL: 11/750 B-DD-M8750-0

TITLE: MOS MEMORY ARRAY

SIZE	CODE	NUMBER	REV.
D	CS	M8750-0-1	A

ML2

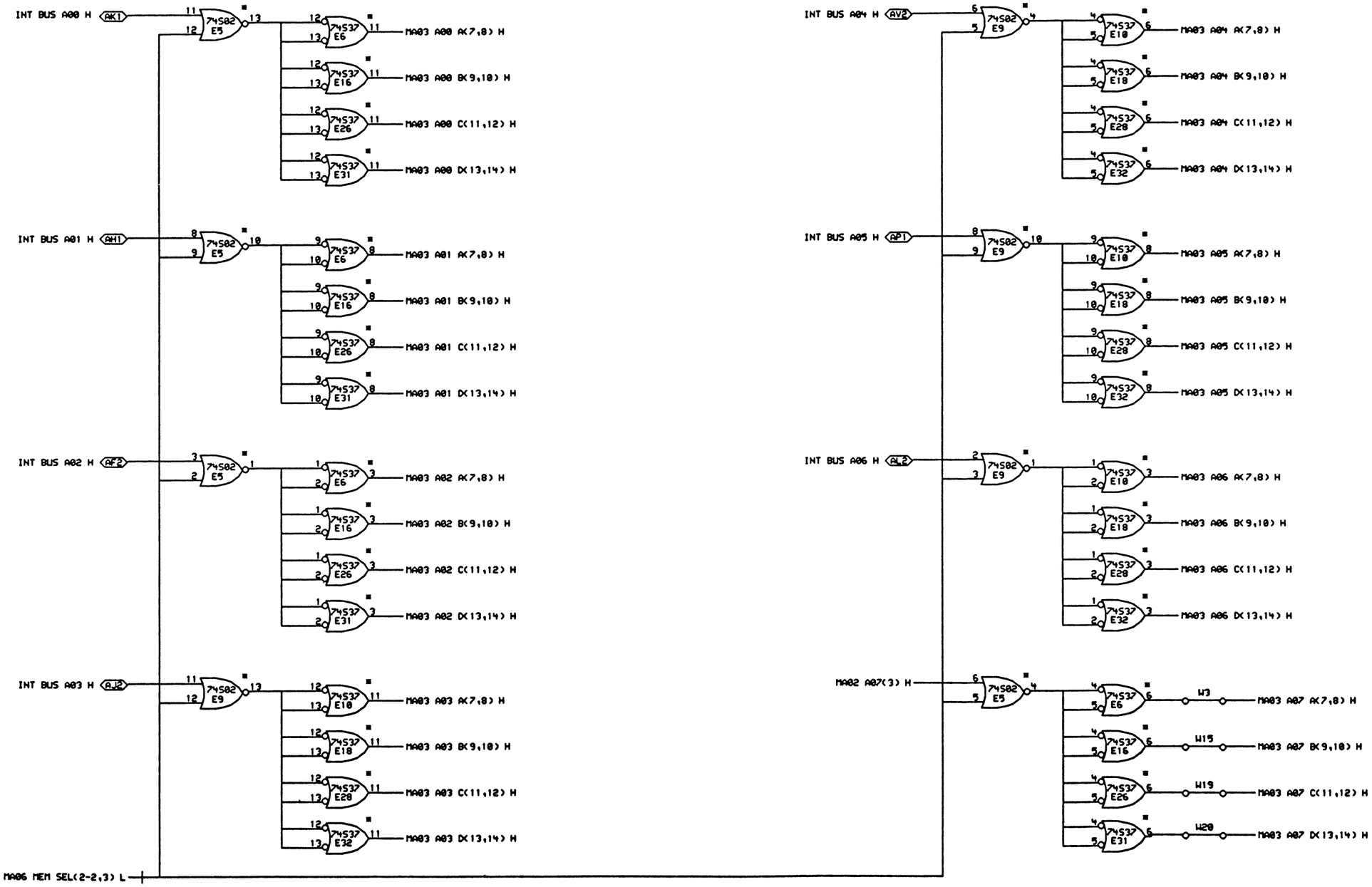

THIS DRAWING AND SPECIFICATIONS, AS AN UNPUBLISHED WORK, ARE THE PROPERTY OF DIGITAL EQUIPMENT CORPORATION AND SHALL NOT BE REPRODUCED OR COPIED OR USED IN WHOLE OR IN PART AS THE BASIS FOR THE MANUFACTURE OR SALE OF ITEMS WITHOUT WRITTEN PERMISSION. COPYRIGHT © 1981, DIGITAL EQUIPMENT CORPORATION.

REVISIONS

CHK	CHANGE NO.	REV

DRN. RCROUSE	DATE 11-MAY-81	ENG:	DATE
CHK D.	DATE	BOARD LOCATION:	
		SHEET 03 OF 15	
C710,1324 M50A03.DRW 08-MAY-81 09:34		NEXT HIGHER ASSEMBLY:	
FIRST USED ON OPTION/MODEL: 11/750		B-DD-M8750-0	

TITLE: MOS MEMORY ARRAY

SIZE	CODE	NUMBER	REV.
D	CS	M8750-0-1	A

ML2

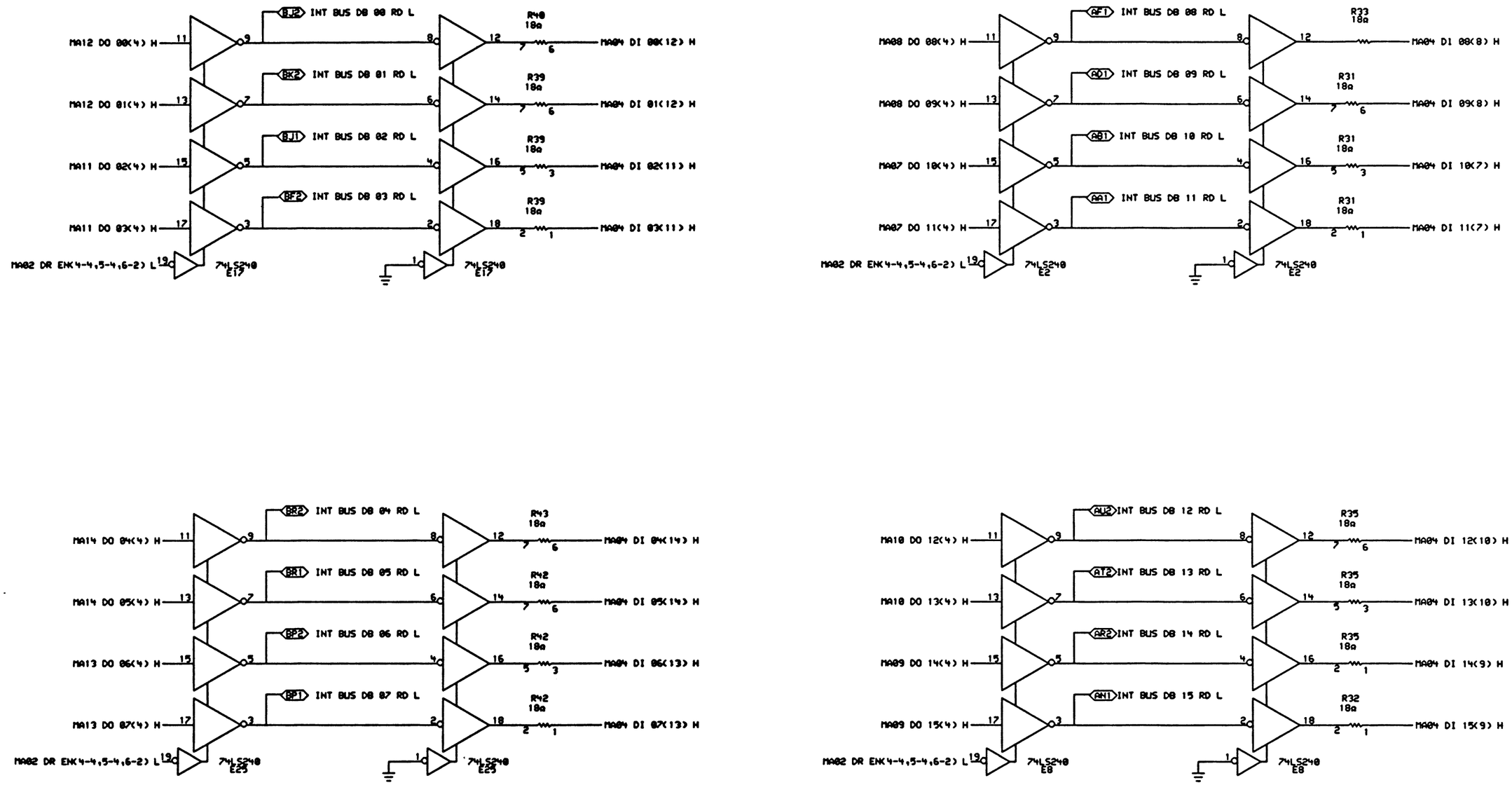

"THIS DRAWING AND SPECIFICATIONS, HEREIN, ARE THE PROPERTY OF DIGITAL EQUIPMENT CORPORATION AND SHALL NOT BE REPRODUCED OR COPIED OR USED IN WHOLE OR IN PART AS THE BASIS FOR THE MANUFACTURE OR SALE OF ITEMS WITHOUT WRITTEN PERMISSION. COPYRIGHT © 1981, DIGITAL EQUIPMENT CORPORATION"

REVISIONS		
CHK	CHANGE NO.	REV

digital

DRN. R.CROUSE DATE 11-MAY-81 ENG. DATE
CHK D. DATE BOARD LOCATION: SHEET 04 OF 15
[710,1324]M50A04.DRW 08-MAY-81 09:36 NEXT HIGHER ASSEMBLY: B-DD-M8750-0
FIRST USED ON OPTION/MODEL: 11/750

TITLE: MOS MEMORY ARRAY

SIZE	CODE	NUMBER	REV.
D	CS	M8750-0-1	A

ML2

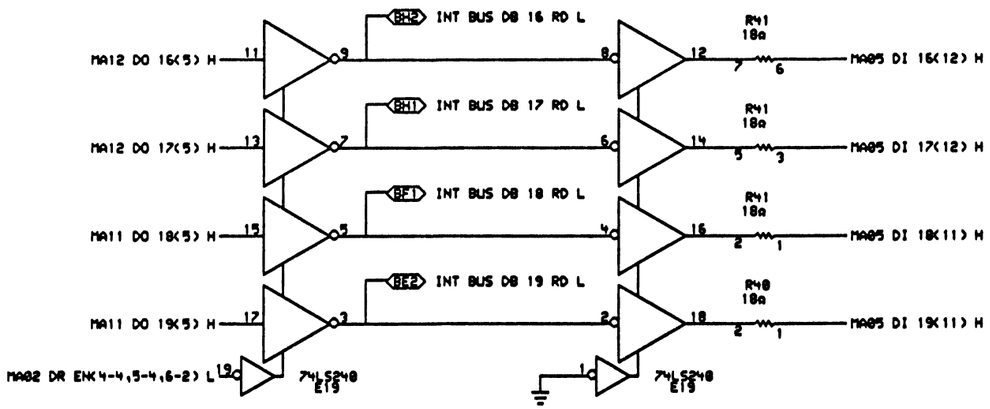

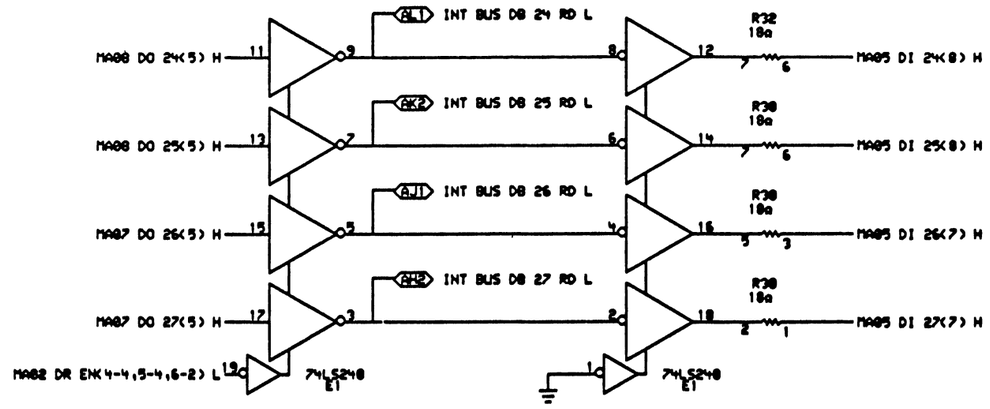

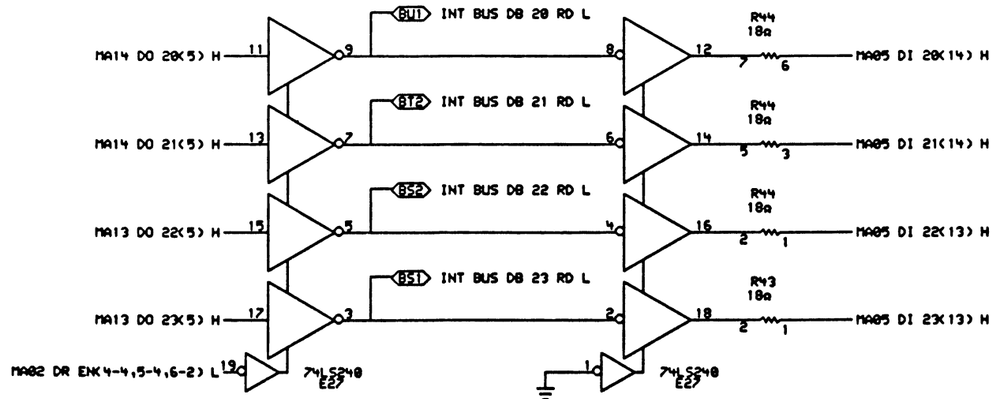

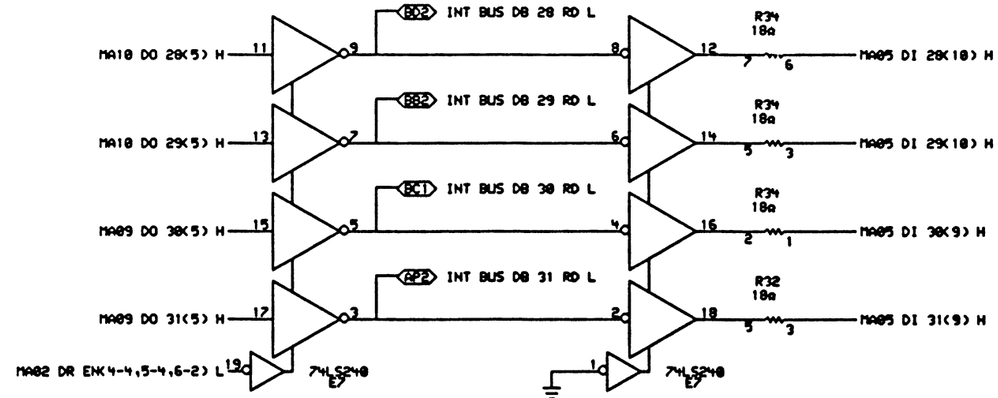

(MA05)

"THIS DRAWING AND SPECIFICATIONS, AS AN INSTR. ARE THE PROPERTY OF DIGITAL EQUIPMENT CORPORATION AND SHALL NOT BE REPRODUCED OR COPIED OR USED IN WHOLE OR IN PART AS THE BASIS FOR THE MANUFACTURE OR SALE OF ITEMS WITHOUT WRITTEN PERMISSION. COPYRIGHT © 1981, DIGITAL EQUIPMENT CORPORATION"

REVISIONS		
CHK	CHANGE NO.	REV

digital

DRN. RCROUSE DATE 11-MAY-81 ENG. DATE
CHK D. DATE BOARD LOCATION:
SHEET 05 OF 15
(710,1324)M750A05.DRW 08-MAY-81 09:37 NEXT HIGHER ASSEMBLY:
FIRST USED ON OPTION/MODEL: 11/750 B-DD-M8750-0

TITLE: MOS MEMORY ARRAY

SIZE	CODE	NUMBER	REV.
D	CS	M8750-0-1	A

ML2

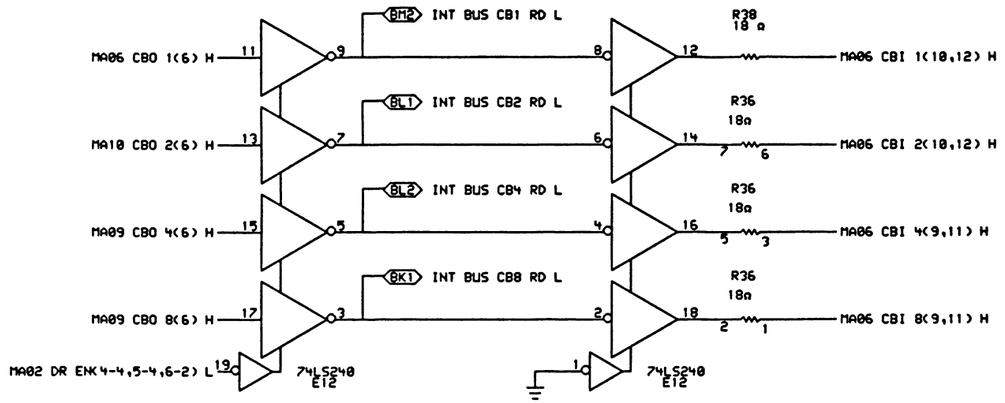

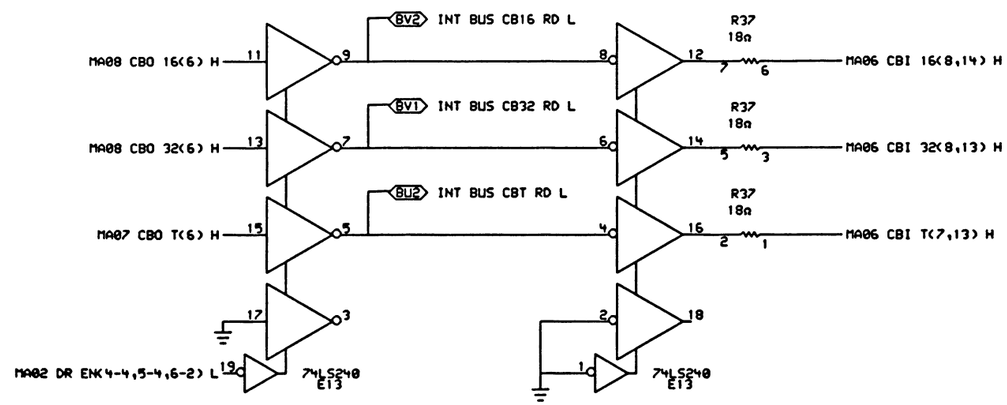

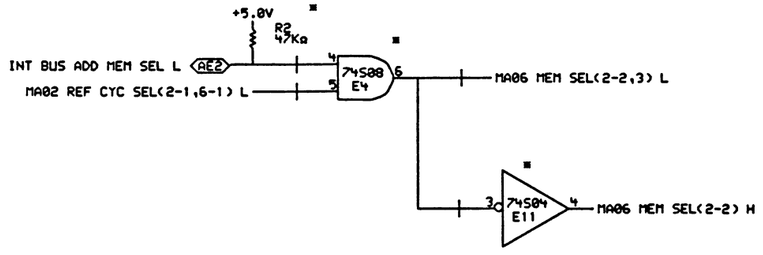

(MA06)

"THIS DRAWING AND SPECIFICATIONS, HEREIN, ARE THE PROPERTY OF DIGITAL EQUIPMENT CORPORATION AND SHALL NOT BE REPRODUCED OR COPIED OR USED IN WHOLE OR IN PART AS THE BASIS FOR THE MANUFACTURE OR SALE OF ITEMS WITHOUT WRITTEN PERMISSION. COPYRIGHT © 1981, DIGITAL EQUIPMENT CORPORATION"

REVISIONS		
CHK	CHANGE NO.	REV

digital

DRN. RCROUSE DATE 11-MAY-81 | ENG. DATE
CHK D. DATE | BOARD LOCATION: SHEET 06 OF 15
(710,1324)M50A06.DRW 08-MAY-81 09:39 | NEXT HIGHER ASSEMBLY:
FIRST USED ON OPTION/MODEL: 11/750 | B-DD-M8750-0

TITLE: MOS MEMORY ARRAY

SIZE	CODE	NUMBER	REV.
D	CS	M8750-0-1	A

ML2

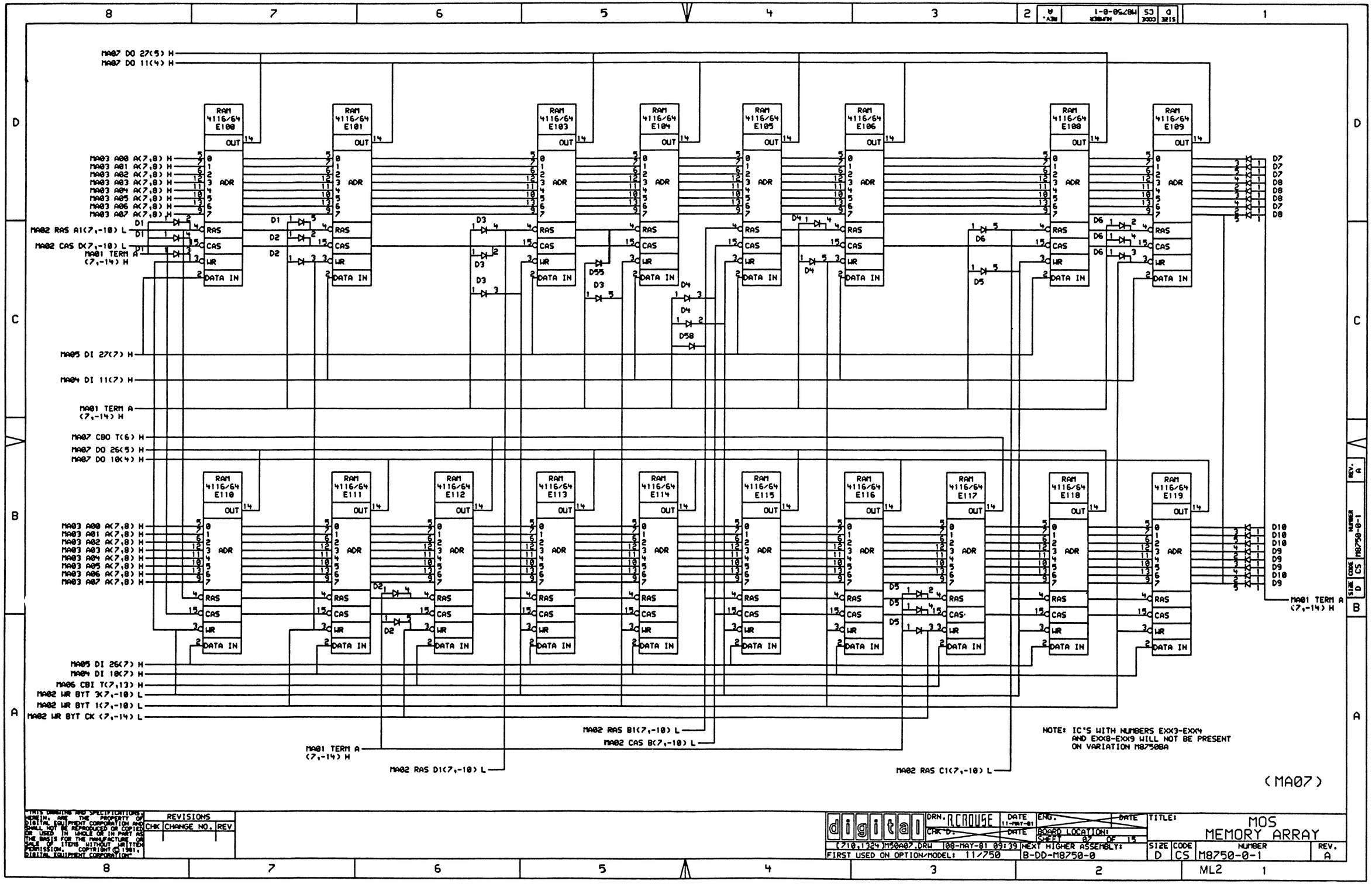

"THIS DRAWING AND SPECIFICATIONS, HEREIN, ARE THE PROPERTY OF DIGITAL EQUIPMENT CORPORATION AND SHALL NOT BE REPRODUCED OR COPIED OR USED IN WHOLE OR IN PART AS THE BASIS FOR THE MANUFACTURE OR SALE OF ITEMS WITHOUT WRITTEN PERMISSION. COPYRIGHT © 1981, DIGITAL EQUIPMENT CORPORATION"

REVISIONS		
CHK	CHANGE NO.	REV

digital	DRN. RCROUSE	DATE 11-MAY-81	ENG. DATE
	CHK D. DATE	BOARD LOCATION:	
(710,1324)M50A07.DRW 08-MAY-81 09:39		NEXT HIGHER ASSEMBLY:	
FIRST USED ON OPTION/MODEL: 11/750		B-DD-M8750-0	

TITLE: MOS MEMORY ARRAY

SIZE	CODE	NUMBER	REV.
D	CS	M8750-0-1	A

SHEET 02 OF 15

ML2

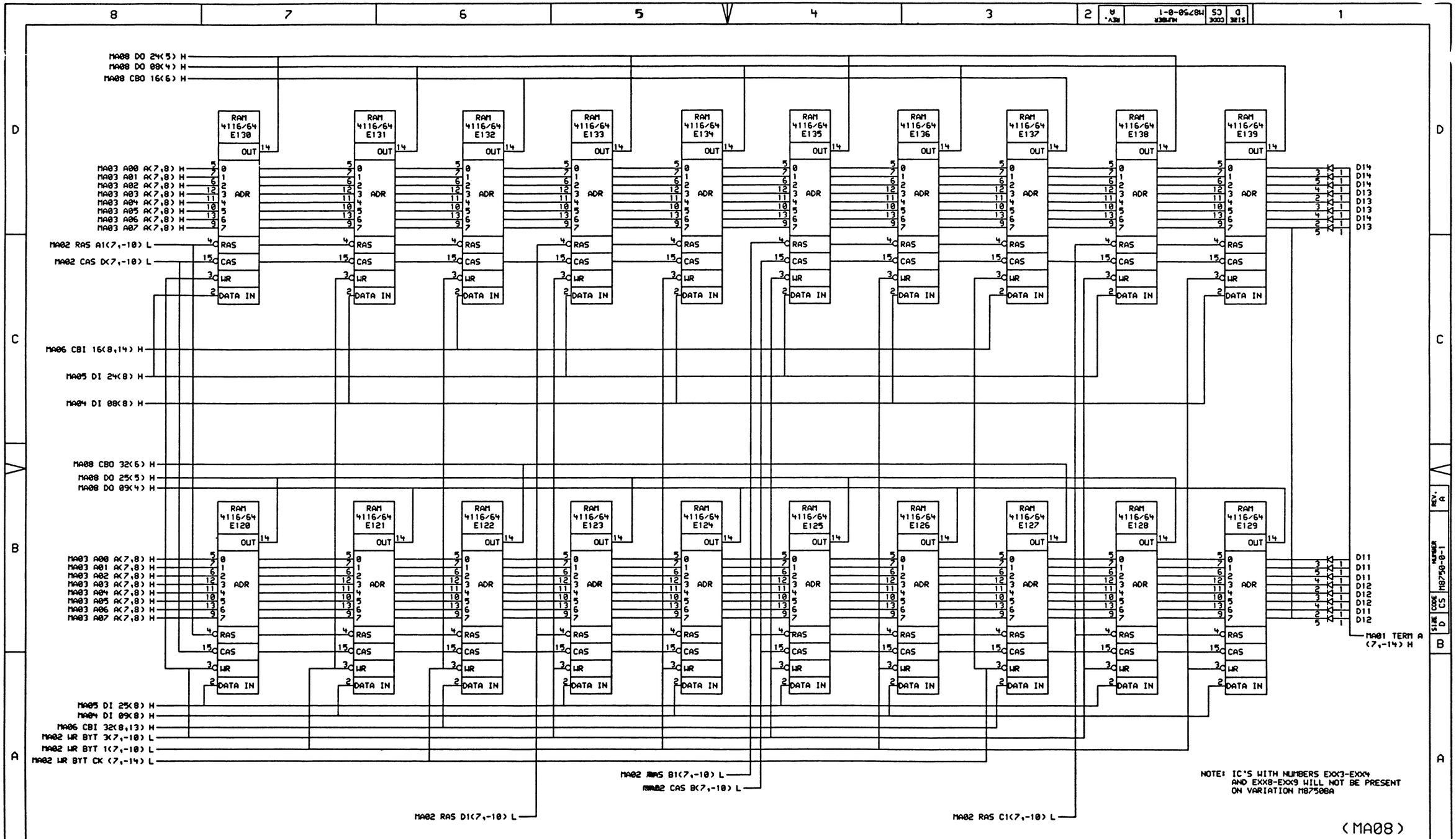

NOTE: IC'S WITH NUMBERS EXX3-EXX4 AND EXX8-EXX9 WILL NOT BE PRESENT ON VARIATION M8750BA

(MA08)

"THIS DRAWING AND SPECIFICATIONS, HEREIN, ARE THE PROPERTY OF DIGITAL EQUIPMENT CORPORATION AND SHALL NOT BE REPRODUCED OR COPIED OR USED IN WHOLE OR IN PART AS THE BASIS FOR THE MANUFACTURE OR SALE OF ITEMS WITHOUT WRITTEN PERMISSION. COPYRIGHT © 1981, DIGITAL EQUIPMENT CORPORATION"

REVISIONS		
CHK	CHANGE NO.	REV

digital

DRN. R.CROUSE DATE 11-MAY-81 ENG. DATE
CHK'D. DATE BOARD LOCATION: SHEET 08 OF 15
[710,1324]M50A08.DRW 08-MAY-81 09:40 NEXT HIGHER ASSEMBLY: B-DD-M8750-0
FIRST USED ON OPTION/MODEL: 11/750

TITLE: MOS MEMORY ARRAY

SIZE	CODE	NUMBER	REV.
D	CS	M8750-0-1	A

ML2

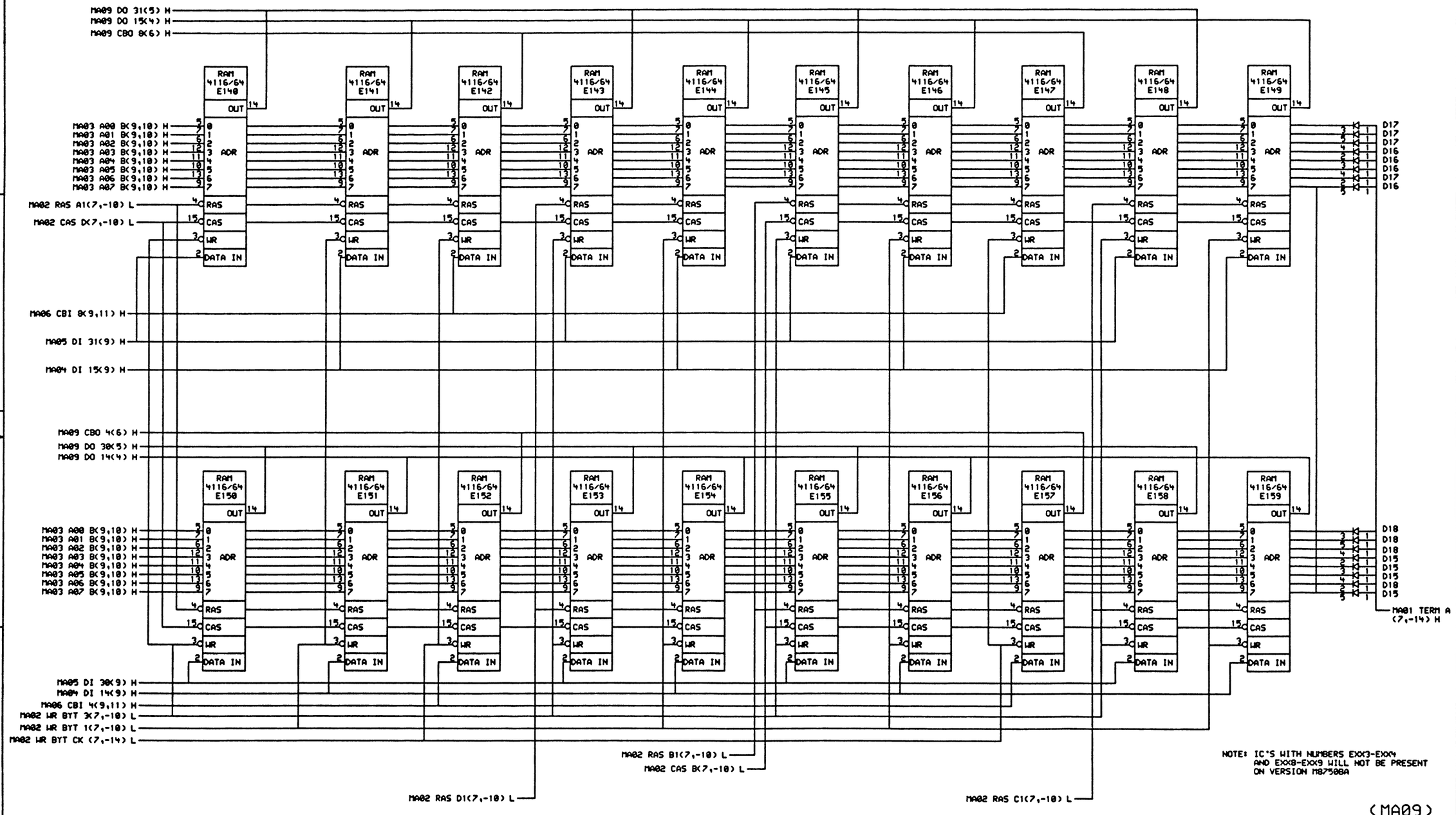

"THIS DRAWING AND SPECIFICATIONS, AS AN INSTRUMENT, ARE THE PROPERTY OF DIGITAL EQUIPMENT CORPORATION AND SHALL NOT BE REPRODUCED OR COPIED OR USED IN WHOLE OR IN PART AS THE BASIS FOR THE MANUFACTURE OR SALE OF ITEMS WITHOUT WRITTEN PERMISSION. COPYRIGHT © 1981, DIGITAL EQUIPMENT CORPORATION"

REVISIONS		
CHK	CHANGE NO.	REV

digital

DRN. RCROUSE	DATE 11-MAY-81	ENG.	DATE
CHK D.	DATE	BOARD LOCATION: SHEET 09 OF 15	
[710,1324]M750A09.DRW 08-MAY-81 09:41		NEXT HIGHER ASSEMBLY: B-DD-M8750-0	
FIRST USED ON OPTION/MODEL: 11/750			

TITLE: MOS MEMORY ARRAY

SIZE	CODE	NUMBER	REV.
D	CS	M8750-0-1	A

M8750-0-1 REV. A SIZE D CODE CS B

ML2

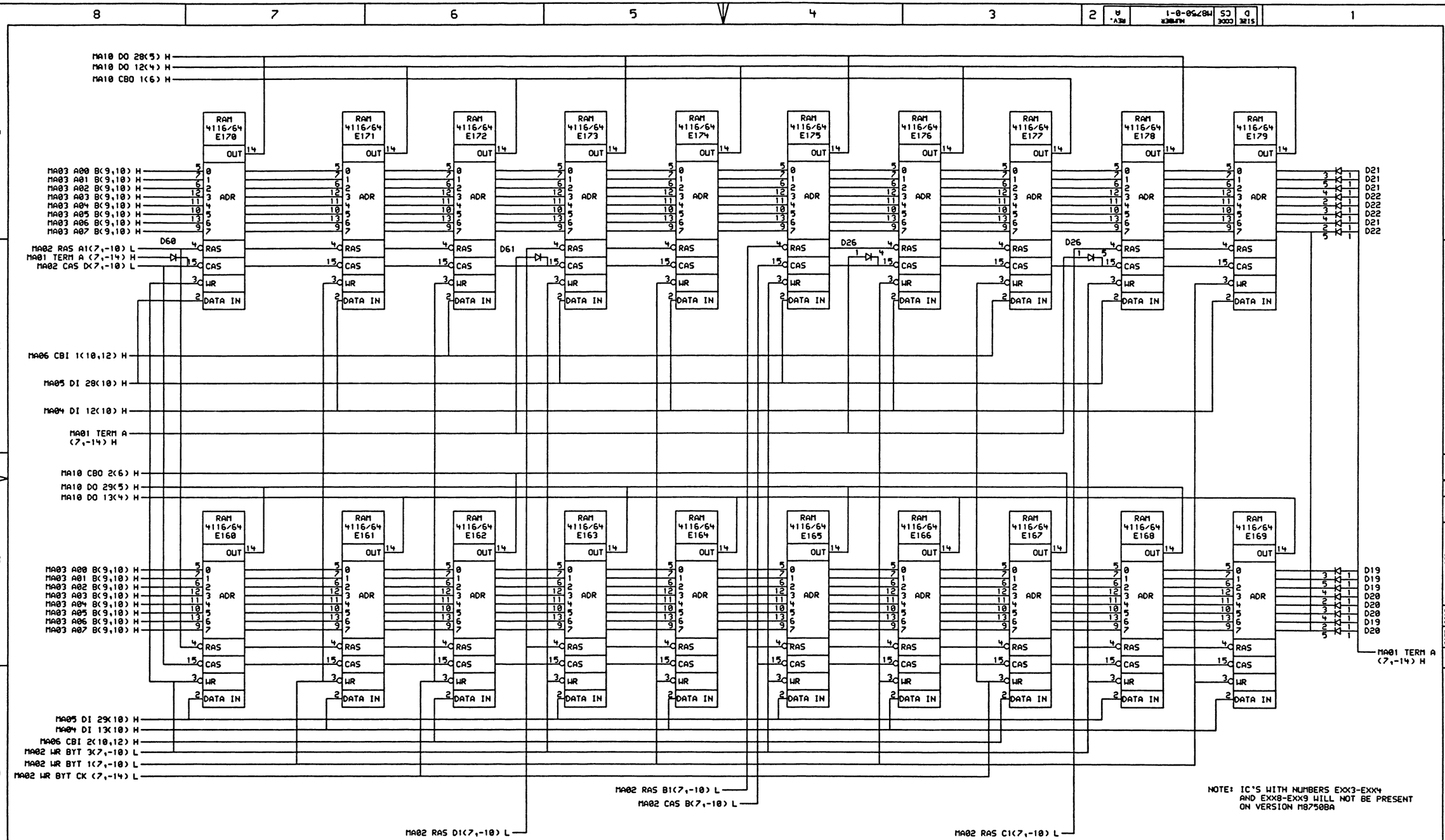

"THIS DRAWING AND SPECIFICATIONS, HEREIN, ARE THE PROPERTY OF DIGITAL EQUIPMENT CORPORATION AND SHALL NOT BE REPRODUCED OR COPIED OR USED IN WHOLE OR IN PART AS THE BASIS FOR THE MANUFACTURE OR SALE OF ITEMS WITHOUT WRITTEN PERMISSION. COPYRIGHT © 1981, DIGITAL EQUIPMENT CORPORATION"

REVISIONS		
CHK	CHANGE NO.	REV

DRN. RCROUSE	DATE 11-MAY-81	ENG.	DATE
CHK D.	DATE	BOARD LOCATION:	
[710,1324]M750A10.DRW	08-MAY-81 09:42	SHEET 10 OF 15	
FIRST USED ON OPTION/MODEL: 11/750		NEXT HIGHER ASSEMBLY: B-DD-M8750-0	

TITLE: MOS MEMORY ARRAY

SIZE	CODE	NUMBER	REV.
D	CS	M8750-0-1	A

ML2

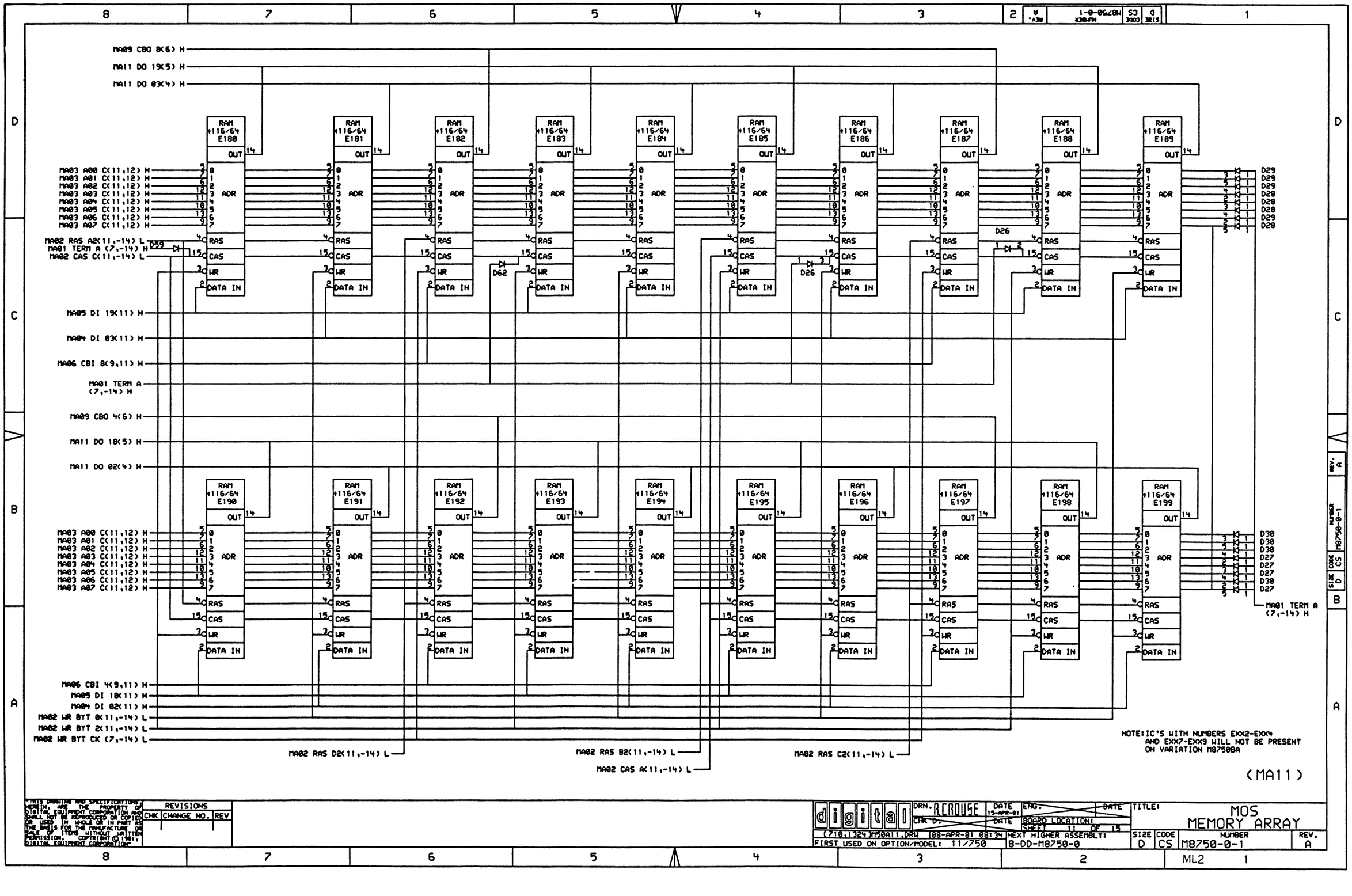

"THIS DRAWING AND SPECIFICATIONS, HEREIN, ARE THE PROPERTY OF DIGITAL EQUIPMENT CORPORATION AND SHALL NOT BE REPRODUCED OR COPIED OR USED IN WHOLE OR IN PART AS THE BASIS FOR THE MANUFACTURE OR SALE OF ITEMS WITHOUT WRITTEN PERMISSION. COPYRIGHT © 1981 DIGITAL EQUIPMENT CORPORATION"

REVISIONS		
CHK	CHANGE NO.	REV

digital

DRN. R.CROUSE DATE 15-APR-81
CHK D. DATE
ENG. DATE
BOARD LOCATION:
SHEET 11 OF 15
(710,1324)M50A11.DRW 08-APR-81 08:34
NEXT HIGHER ASSEMBLY: B-DD-M8750-0
FIRST USED ON OPTION/MODEL: 11/750

TITLE: MOS MEMORY ARRAY

SIZE	CODE	NUMBER	REV.
D	CS	M8750-0-1	A

REV. A | NUMBER M8750-0-1 | CODE CS | SIZE D

8 7 6 5 4 3 2 ML2 1

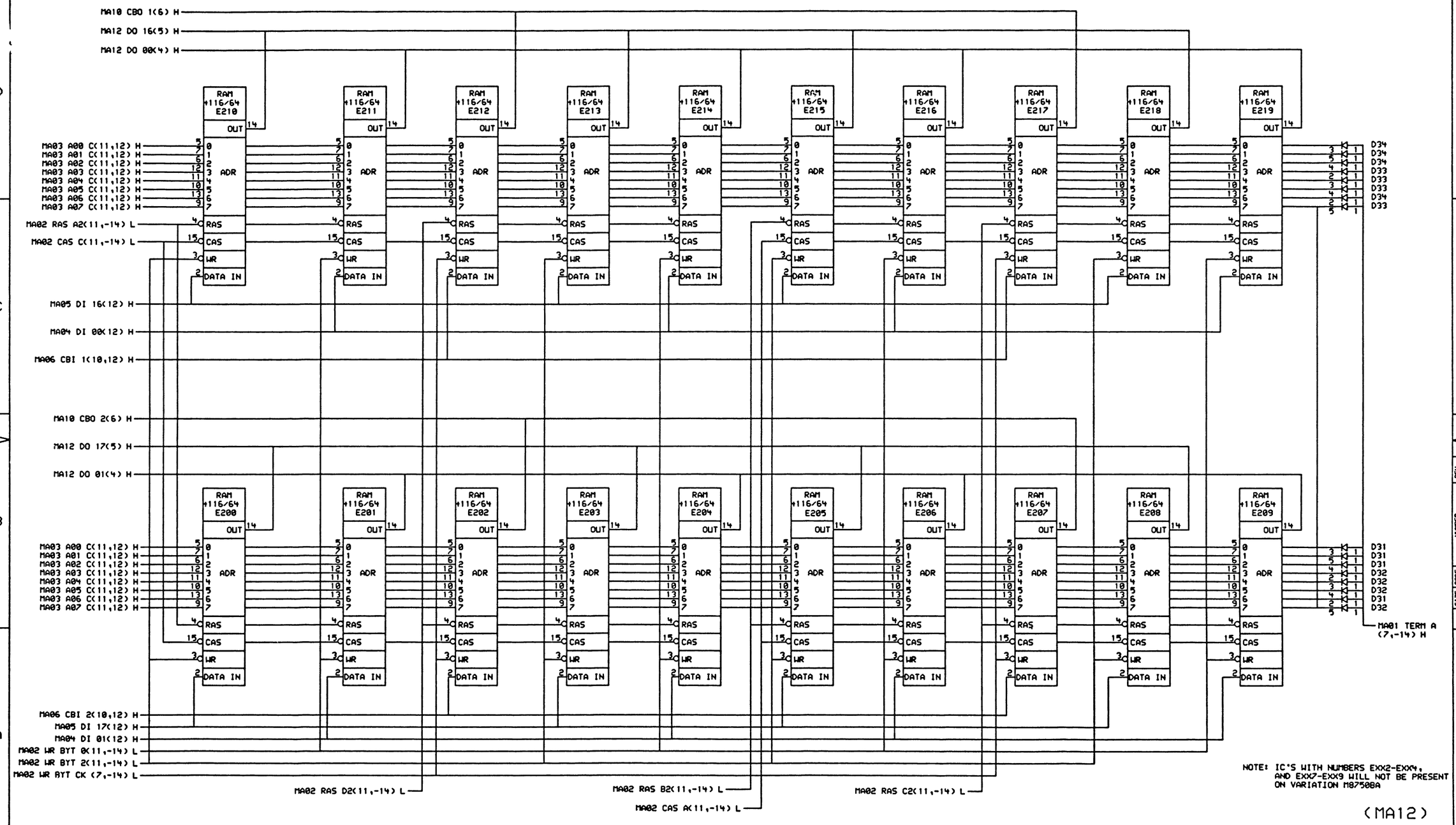

NOTE: IC'S WITH NUMBERS EXX2-EXX4, AND EXX7-EXX9 WILL NOT BE PRESENT ON VARIATION M8750BA

(MA12)

"THIS DRAWING AND SPECIFICATIONS, HEREIN, ARE THE PROPERTY OF DIGITAL EQUIPMENT CORPORATION AND SHALL NOT BE REPRODUCED OR COPIED OR USED IN WHOLE OR IN PART AS THE BASIS FOR THE MANUFACTURE OR SALE OF ITEMS WITHOUT WRITTEN PERMISSION. COPYRIGHT © 1981, DIGITAL EQUIPMENT CORPORATION"

REVISIONS		
CHK	CHANGE NO.	REV

DRN. RCROUSE	DATE 15-APR-81	ENG.	DATE	TITLE: MOS MEMORY ARRAY	
CHK D.T.	DATE	BOARD LOCATION:			
[710,1324]M50A12.DRW 08-APR-81 09:00		SHEET 12 OF 15			
FIRST USED ON OPTION/MODEL: 11/750		NEXT HIGHER ASSEMBLY: B-DD-M8750-0		SIZE D / CODE CS / NUMBER M8750-0-1	REV. A

ML2

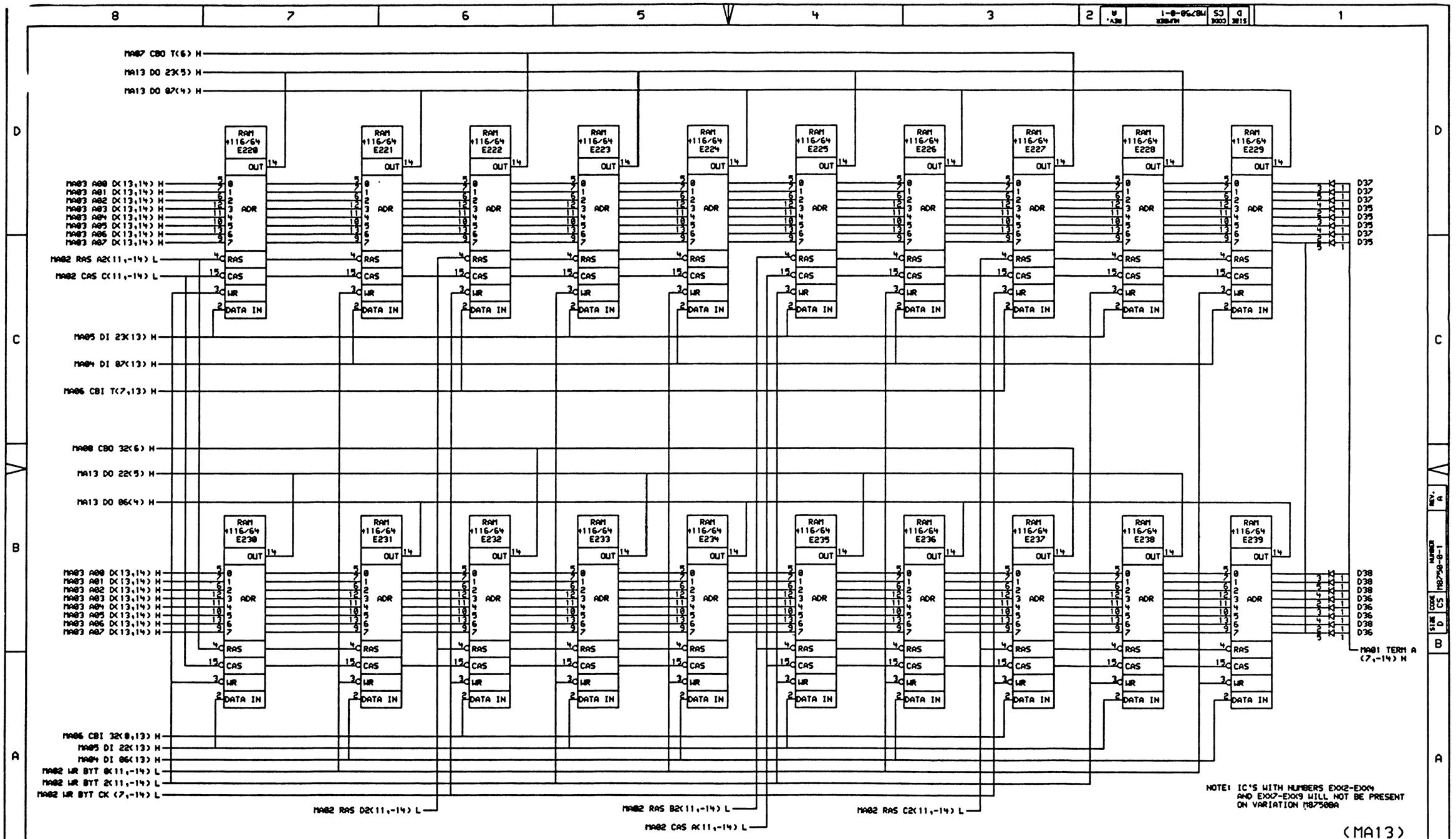

"THIS DRAWING AND SPECIFICATIONS, HEREIN, ARE THE PROPERTY OF DIGITAL EQUIPMENT CORPORATION AND SHALL NOT BE REPRODUCED OR COPIED OR USED IN WHOLE OR IN PART AS THE BASIS FOR THE MANUFACTURE OR SALE OF ITEMS WITHOUT WRITTEN PERMISSION. COPYRIGHT © 1981, DIGITAL EQUIPMENT CORPORATION"

REVISIONS		
CHK	CHANGE NO.	REV

digital

DRN. R.CROUSE DATE 15-APR-81 ENG. DATE
CHK D. DATE BOARD LOCATION: SHEET 13 OF 15
(710,1324)M50A13.DRW 08-APR-81 09:03 NEXT HIGHER ASSEMBLY: B-DD-M8750-0
FIRST USED ON OPTION/MODEL: 11/750

TITLE: MOS MEMORY ARRAY

SIZE	CODE	NUMBER	REV.
D	CS	M8750-0-1	A

ML2

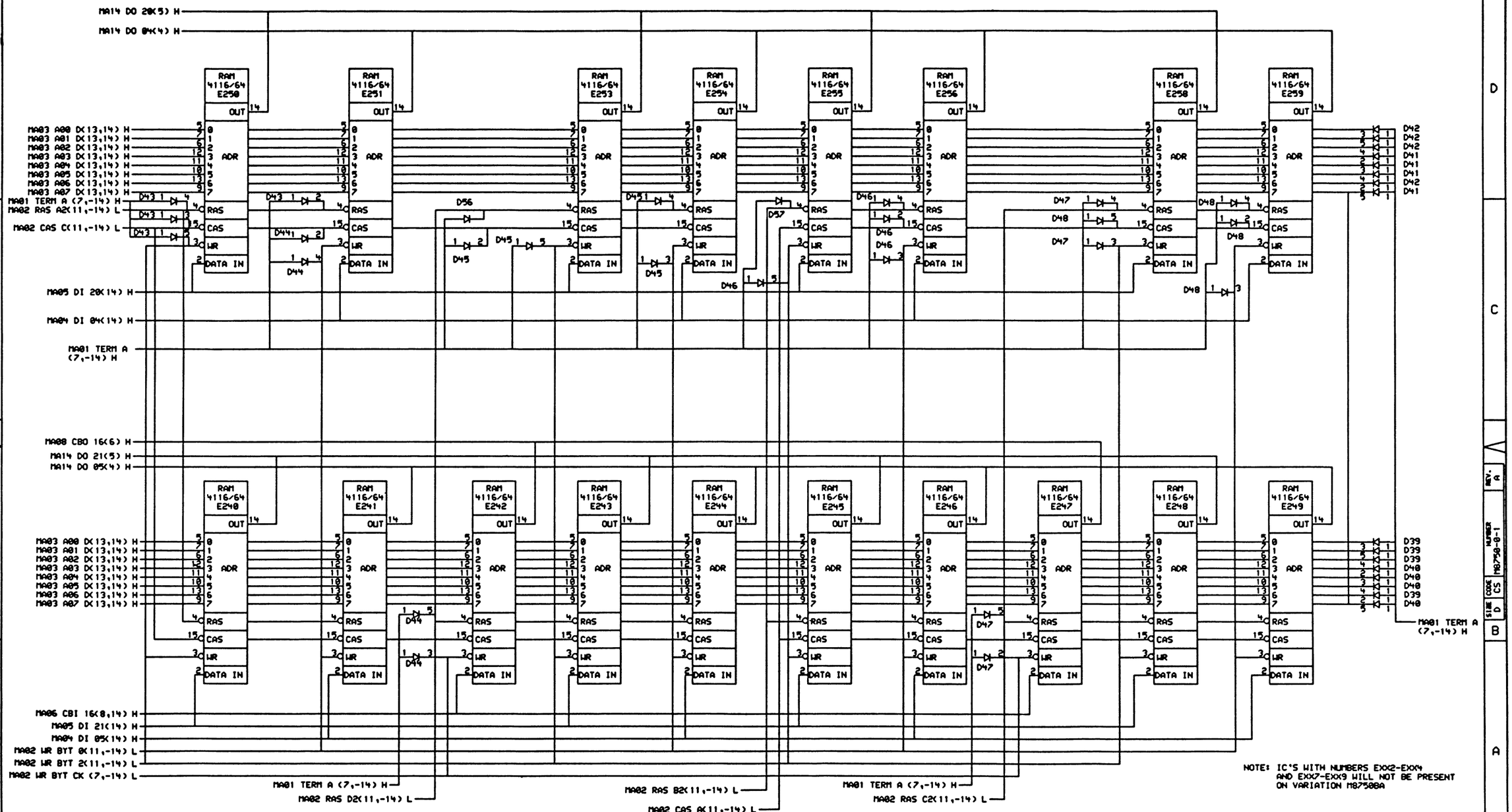

"THIS DRAWING AND SPECIFICATIONS, HEREIN, ARE THE PROPERTY OF DIGITAL EQUIPMENT CORPORATION AND SHALL NOT BE REPRODUCED OR COPIED OR USED IN WHOLE OR IN PART AS THE BASIS FOR THE MANUFACTURE OR SALE OF ITEMS WITHOUT WRITTEN PERMISSION. COPYRIGHT © 1981, DIGITAL EQUIPMENT CORPORATION"

REVISIONS		
CHK	CHANGE NO.	REV

digital

DRN.	DATE 08-MAY-81	ENG.	DATE
CHK D.	DATE	BOARD LOCATION: SHEET 14 OF 15	
(710,1324 M50A14.DRW 08-MAY-81 08:47		NEXT HIGHER ASSEMBLY: B-DD-M8750-0	
FIRST USED ON OPTION/MODEL: 11/750			

TITLE: MOS MEMORY ARRAY

SIZE	CODE	NUMBER	REV.
D	CS	M8750-0-1	A

ML2

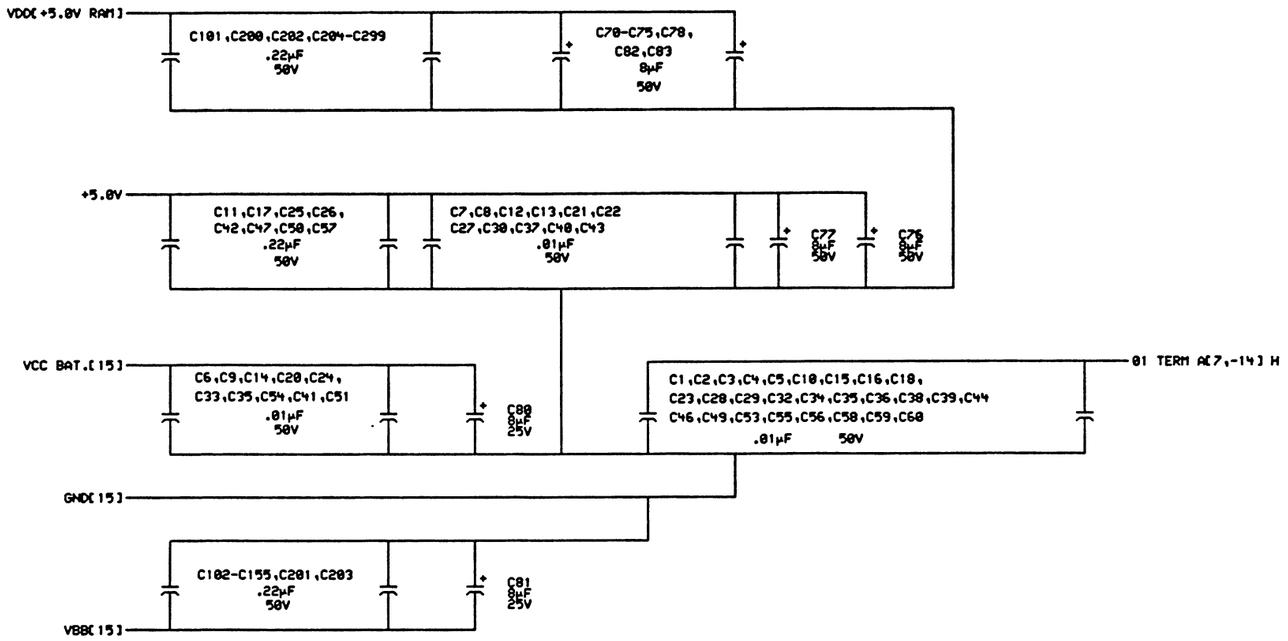

(MA15)

THIS DRAWING AND SPECIFICATIONS, HEREIN, ARE THE PROPERTY OF DIGITAL EQUIPMENT CORPORATION AND SHALL NOT BE REPRODUCED OR COPIED OR USED IN WHOLE OR IN PART AS THE BASIS FOR THE MANUFACTURE OR SALE OF ITEMS WITHOUT WRITTEN PERMISSION. COPYRIGHT © 1981, DIGITAL EQUIPMENT CORPORATION.

REVISIONS		
CHK	CHANGE NO.	REV

DRN. RCROUSE DATE 15-APR-81
CHK D. DATE
ENG. DATE
BOARD LOCATION:
SHEET 15 OF 15
(710,1324)M50A15.DRW 08-APR-81 09:22
NEXT HIGHER ASSEMBLY: B-DD-M8750-0
FIRST USED ON OPTION/MODEL: 11/750

TITLE: MOS MEMORY ARRAY

SIZE	CODE	NUMBER	REV.
D	CS	M8750-0-1	A

ML2